FCC TEST REPORT

Test report
On Behalf of
Shanghai Jun Bang Industrial Company Limited
For
Wireless Charger
Model No.: W15, W10, W20, W25, W30

FCC ID: 2AUZ2-W15

Prepared for :	**Shanghai Jun Bang Industrial Company Limited** **3F, Building A3, JingWan Industrial Area, Gushu Village, Xixiang Street, Bao'an District, Shenzhen, China**
Prepared By :	**Shenzhen HUAK Testing Technology Co., Ltd.** **No.1 Building, No.5780 Lao Zhu Feng Road, Qing Pu District, Shanghai** **201717, China**

Date of Test:	**Oct. 24, 2019 ~ Nov. 1, 2019**
Date of Report:	**Nov. 1, 2019**
Report Number:	**HK1910172663-3E**

TEST RESULT CERTIFICATION

Applicant's name ..... :	Shanghai Jun Bang Industrial Company Limited
Address..... :	No.1 Building, No.5780 Lao Zhu Feng Road, Qing Pu District, Shanghai 201717, China
Manufacture's Name..... :	Shanghai Jun Bang Industrial Company Limited
Address..... :	No.1 Building, No.5780 Lao Zhu Feng Road, Qing Pu District, Shanghai 201717, China
Product description	
Product name ..... :	Wireless Charger
Model and/or type reference . :	W15, W10, W20, W25, W30
Standards..... :	FCC Rules and Regulations Part 15 Subpart C (Section 15.209), ANSI C63.10: 2013

This publication may be reproduced in whole or in part for non-commercial purposes as long as the Shenzhen HUAK Testing Technology Co., Ltd. is acknowledged as copyright owner and source of the material. Shenzhen HUAK Testing Technology Co., Ltd. takes no responsibility for and will not assume liability for damages resulting from the reader's interpretation of the reproduced material due to its placement and context.

Date of Test..... :	
Date (s) of performance of tests..... :	Oct. 24, 2019 ~ Nov. 1, 2019
Date of Issue..... :	Nov. 1, 2019
Test Result..... :	**Pass**

Testing Engineer : Gary Qian

(Gary Qian)

Technical Manager : Eden Hu

(Eden Hu)

Authorized Signatory : Jason Zhou

(Jason Zhou)

Table of Contents **Page**

1 . TEST SUMMARY	4
1.1 TEST PROCEDURES AND RESULTS	4
1.2 TEST FACILITY	4
1.3 MEASUREMENT UNCERTAINTY	4
2. GENERAL INFORMATION	5
2.1 General Description of EUT	5
2.2. Carrier Frequency of Channels	6
2.3 Operation of EUT during testing	6
2.4 Description of Test Setup	6
2.5 Measurement Instruments List	7
2.6 Description of Testing Condition	7
3. CONDUCTED EMISSION TEST	8
3.1 Block Diagram of Test Setup	8
3.2 Conducted Power Line Emission Limit	8
3.3 Test Procedure	8
3.4 Test Result	8
4. Occupied Bandwidth	11
4.1 Block Diagram of Test Setup	11
4.2 Rules and specifications	11
4.3 Test Procedure	11
4.4 Test Result	12
5. RADIA TED EMISSIONS	13
5.1 Block Diagram of Test Setup	13
5.2 Rules and specifications	14
5.3 Test Procedure	15
5.4 Test Result	15
6 ANTENNA REQUIREMENT	18
7. PHOTOGRAPH OF TEST	19
7.1 Radiated Emission	19
7.2 Conducted Emission	20

1. TEST SUMMARY

1.1 TEST PROCEDURES AND RESULTS

DESCRIPTION OF TEST	RESULT
CONDUCTED EMISSIONS TEST	COMPLIANT
RADIATED EMISSION TEST	COMPLIANT
OCCUPIED BANDWIDTH MEASUREMENT	COMPLIANT
ANTENNA REQUIREMENT	COMPLIANT

1.2 TEST FACILITY

Test Firm : Shenzhen HUAK Testing Technology Co., Ltd.

Address 1F, B2 Building, Junfeng Zhongcheng Zhizao Innovation Park, Fuhai Street, Bao'an District, Shenzhen City, China

1.3 MEASUREMENT UNCERTAINTY

Measurement Uncertainty

Conducted Emission Expanded Uncertainty	=	2.23dB, k=2
Radiated emission expanded uncertainty(9kHz-30MHz)	=	3.08dB, k=2
Radiated emission expanded uncertainty(30MHz-1000MHz)	=	4.42dB, k=2
Radiated emission expanded uncertainty(Above 1GHz)	=	4.06dB, k=2

2. GENERAL INFORMATION

2.1 General Description of EUT

Equipment	Wireless Charger
Model Name	W15
Serial No.	W10, W20, W25, W30
Model Difference	All model's the function, software and electric circuit are the same, only with a product color, shape, nameplate and model named different. Test sample model: W15
Trade Mark	New Converter
FCC ID	2AUZ2-W15
Antenna Type	Coil Antenna
Antenna Gain	0dBi
Operation frequency	111.5-205KHz
Modulation Type	ASK
Power Source	Input: DC 5V 2A or 9V 1.67A from Adapter Output: 10W, 7.5W, 5W
Power Rating	Input: DC 5V 2A or 9V 1.67A from Adapter Output: 10W, 7.5W, 5W

2.2. Carrier Frequency of Channels

Operation Frequency each of channel	
Channel	Frequency
1	125KHz

2.3 Operation of EUT during testing

Operating Mode

The mode is used: Transmitting mode

2.4 Description of Test Setup

Operation of EUT during testing

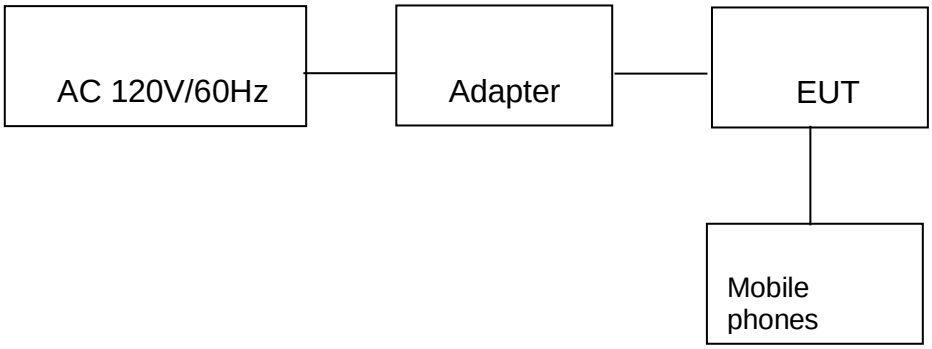

Setup:Transmission mode

- Adapter information
  Model: HAK24WG-1200200U
  Input: 100-240V~, 50/60Hz, 0.6A
  Output: 12VDC, 2A

- Mobile phones information
  Model: S6
  Input: 5VDC

The sample was placed (0.8m below 1GHz) above the ground plane of 3m chamber. Measurements in both horizontal and vertical polarities were performed. During the test, each emission was maximized by: having the EUT continuously working, investigated all operating modes, rotated about all 3 axis (X, Y & Z) and considered typical configuration to obtain worst position, manipulating interconnecting cables, rotating the turntable, varying antenna height from 1m to 4m in both horizontal and vertical polarizations. The emissions worst-case are shown in Test Results of the following pages. The worst case is X position

2.5 Measurement Instruments List

Item	Equipment	Manufacturer	Model No.	Serial No.	Last Cal.	Cal. Interval
1.	L.I.S.N. Artificial Mains Network	R&S	ENV216	HKE-002	Dec. 27, 2018	1 Year
2.	Receiver	R&S	ESCI 7	HKE-010	Dec. 27, 2018	1 Year
3.	RF automatic control unit	Tonscend	JS0806-2	HKE-060	Dec. 27, 2018	1 Year
4.	Spectrum analyzer	R&S	FSP40	HKE-025	Dec. 27, 2018	1 Year
5.	Spectrum analyzer	Agilent	N9020A	HKE-048	Dec. 27, 2018	1 Year
6.	Preamplifier	Schwarzbeck	BBV 9743	HKE-006	Dec. 27, 2018	1 Year
7.	EMI Test Receiver	Rohde & Schwarz	ESCI 7	HKE-010	Dec. 27, 2018	1 Year
8.	Bilog Broadband Antenna	Schwarzbeck	VULB9163	HKE-012	Dec. 27, 2018	1 Year
9.	Loop Antenna	Schwarzbeck	FMZB 1519 B	HKE-014	Dec. 27, 2018	1 Year
10.	Horn Antenna	Schewarzbeck	9120D	HKE-013	Dec. 27, 2018	1 Year
11.	Pre-amplifier	EMCI	EMC051845 SE	HKE-015	Dec. 27, 2018	1 Year
12.	Pre-amplifier	Agilent	83051A	HKE-016	Dec. 27, 2018	1 Year
13.	EMI Test Software EZ-EMC	Tonscend	JS1120-B Version	HKE-083	Dec. 27, 2018	N/A
14.	Power Sensor	Agilent	E9300A	HKE-086	Dec. 27, 2018	1 Year
15.	Spectrum analyzer	Agilent	N9020A	HKE-048	Dec. 27, 2018	1 Year
16.	Signal generator	Agilent	N5182A	HKE-029	Dec. 27, 2018	1 Year
17.	Signal Generator	Agilent	83630A	HKE-028	Dec. 27, 2018	1 Year
18.	Shielded room	Shiel Hong	4*3*3	HKE-039	Dec. 27, 2017	3 Year

2.6 Description of Testing Condition

	Normal Test Conditions	**Extreme Test Conditions**
Temperature	15°C~35°C	-10°C~55°C
Humidity	20%~75%	N/A
Supply Voltage	Input :DC 5V 2A /DC 9V 1.67A Output :10W, 7.5W, 5W	DC 4.5V~DC 10V

Note: All the mode will be tested, and the worst case data display in the report.

The 5V 2A mode is the worst case in the test. And also the output 10W is the worst test case.

3. CONDUCTED EMISSION TEST

3.1 Block Diagram of Test Setup

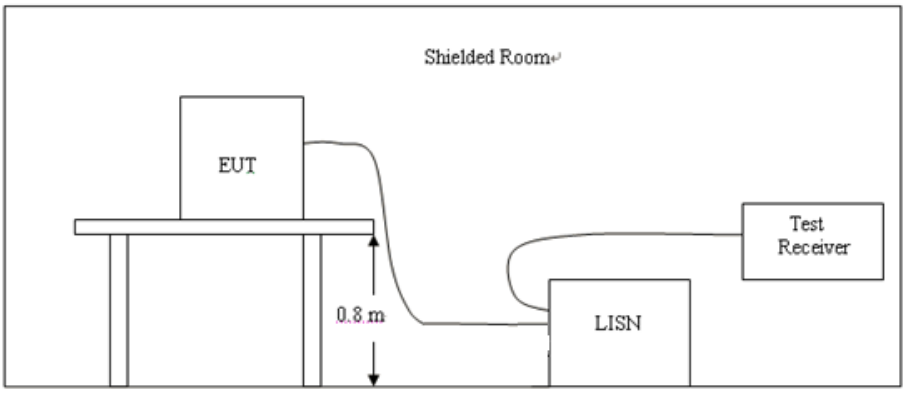

3.2 Conducted Power Line Emission Limit

According to FCC Part 15.207(a)

Frequency (MHz)	Maximum RF Line Voltage (dBμV)			
	CLASS A		CLASS B	
	Q.P.	Ave.	Q.P.	Ave.
0.15 - 0.50	79	66	66-56*	56-46*
0.50 - 5.00	73	60	56	46
5.00 - 30.0	73	60	60	50

* Decreasing linearly with the logarithm of the frequency

For intentional device, according to §15.207Line Conducted Emission Limit is same as above table.

3.3 Test Procedure

1, The equipment was set up as per the test configuration to simulate typical actual usage per the user's manual. The EUT is a tabletop system, a wooden table with a height of 0.8 meters is used and is placed on the ground plane as per ANSI C63.10.
2, Support equipment, if needed, was placed as per ANSI C63.10.
3, All I/O cables were positioned to simulate typical actual usage as per ANSI C63.10.
4, If a EUT received DC power from the USB Port of Notebook PC, the PC's adapter received AC120V/60Hz power through a Line Impedance Stabilization Network (LISN) which supplied power source and was grounded to the ground plane.
5, All support equipments received AC power from a second LISN, if any.
6, The EUT test program was started. Emissions were measured on each current carrying line of the EUT using a spectrum Analyzer / Receiver connected to the LISN powering the EUT. The LISN has two monitoring points: Line 1 (Hot Side) and Line 2 (Neutral Side). Two scans were taken: one with Line 1 connected to Analyzer / Receiver and Line 2 connected to a 50 ohm load; the second scan had Line 1 connected to a 50 ohm load and Line 2 connected to the Analyzer / Receiver.
7, Analyzer / Receiver scanned from 150 KHz to 30MHz for emissions in each of the test modes

3.4 Test Result

PASS

Remark: We tested the All Mode, the worst case (Full Load) was recorded.
Please refer to following diagram for individual

Test Specification: Line

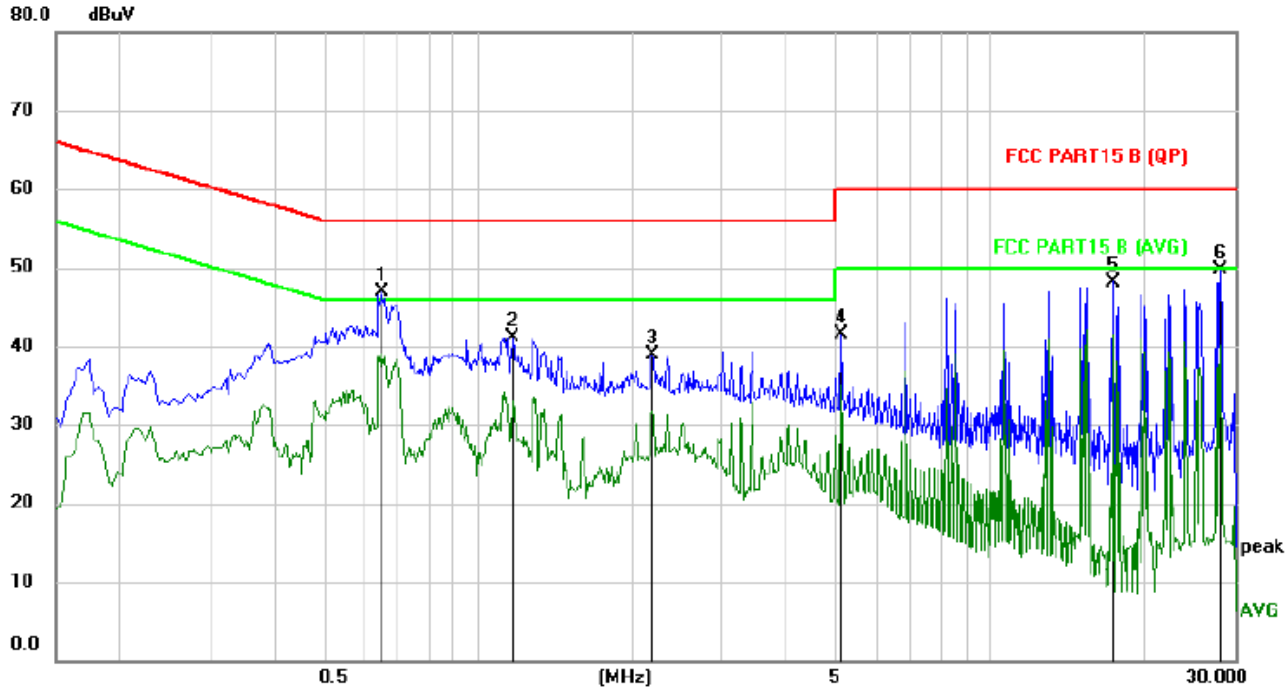

No.	Mk.	Freq.	Reading Level	Correct Factor	Measure-ment	Limit	Margin		
		MHz	dBuV	dB	dBuV	dBuV	dB	Detector	Comment
1	*	0.6500	36.92	10.04	46.96	56.00	-9.04	peak	
2		1.1660	31.17	10.00	41.17	56.00	-14.83	peak	
3		2.1940	28.89	10.06	38.95	56.00	-17.05	peak	
4		5.1300	31.10	10.44	41.54	60.00	-18.46	peak	
5		17.4420	37.49	10.71	48.20	60.00	-11.80	peak	
6		28.0420	38.72	10.97	49.69	60.00	-10.31	peak	

Remark: Transd = Cable lose + Antenna factor - Pre-amplifier; Margin = Measurement - Limit

Test Specification: Neutral

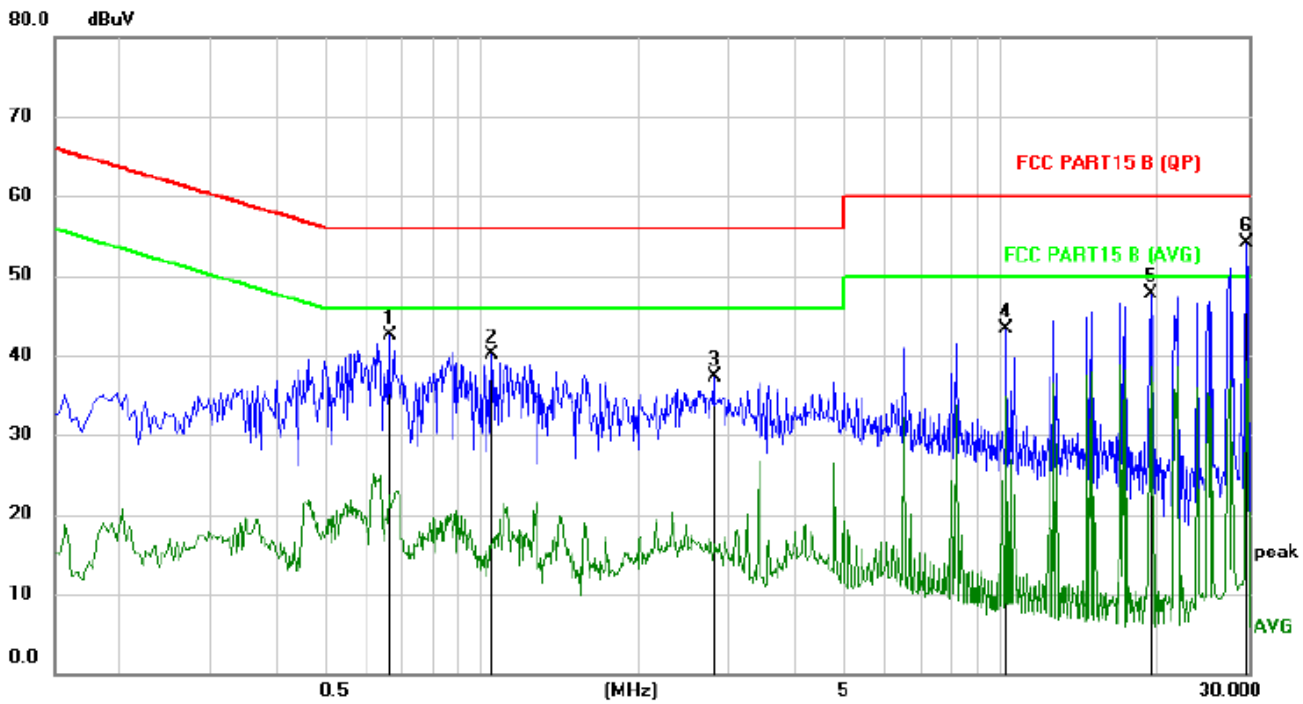

No.	Mk.	Freq.	Reading Level	Correct Factor	Measure-ment	Limit	Margin		
		MHz	dBuV	dB	dBuV	dBuV	dB	Detector	Comment
1		0.6620	32.66	9.88	42.54	56.00	-13.46	peak	
2		1.0460	30.00	10.07	40.07	56.00	-15.93	peak	
3		2.8060	27.06	10.16	37.22	56.00	-18.78	peak	
4		10.2620	32.79	10.51	43.30	60.00	-16.70	peak	
5		19.4900	36.90	10.79	47.69	60.00	-12.31	peak	
6	*	29.7500	43.12	11.02	54.14	60.00	-5.86	peak	

Remark: Transd = Cable lose + Antenna factor - Pre-amplifier; Margin = Measurement - Limit

4. Occupied Bandwidth

4.1 Block Diagram of Test Setup

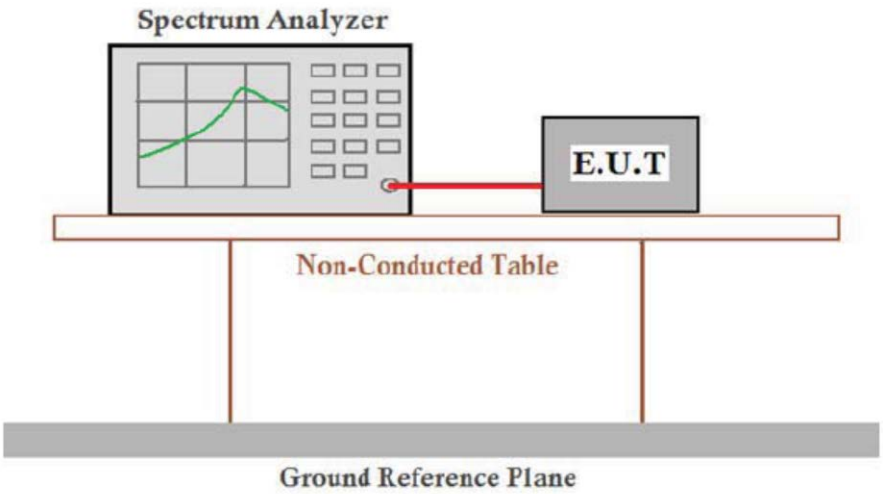

4.2 Rules and specifications

CFR 47 Part 15.215(c)

ANSI C63.10-2013

4.3 Test Procedure

Intentional radiators operating under the alternative provisions to the general emission limits, as contained in §§15.217 through 15.257 and in subpart E of this part, must be designed to ensure that 20dB bandwidth of the emission, or whatever bandwidth may otherwise be specified in the specific rule section under which the equip compliance with the 20dB attenuation specification may base on measurement at the intentional radiator's antenna output terminal unless the intentional radiator uses a permanently attached antenna, in which case compliance shall be.deomonstrated by measuring the radiated emissions.

4.4 Test Result

PASS

Mode	Freq (KHz)	20dB Bandwidth (KHz)	Limit (kHz)	Conclusion
Tx Mode	125	2.711	/	PASS

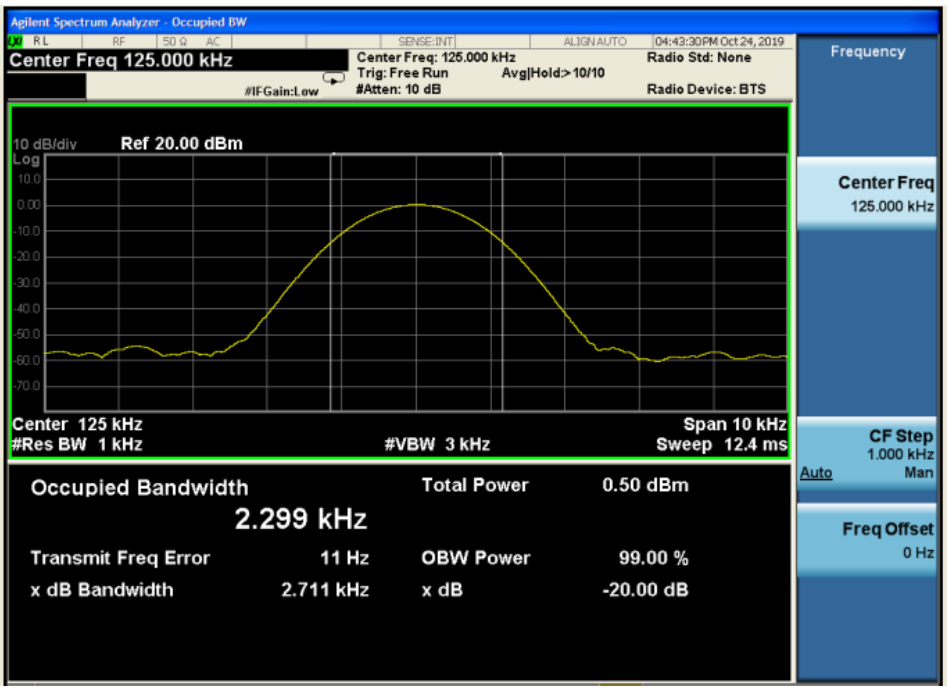

5. RADIA TED EMISSIONS

5.1 Block Diagram of Test Setup

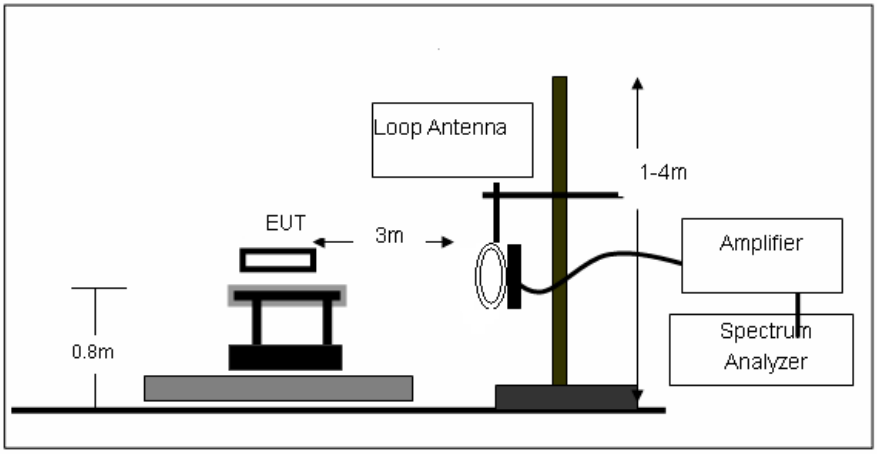

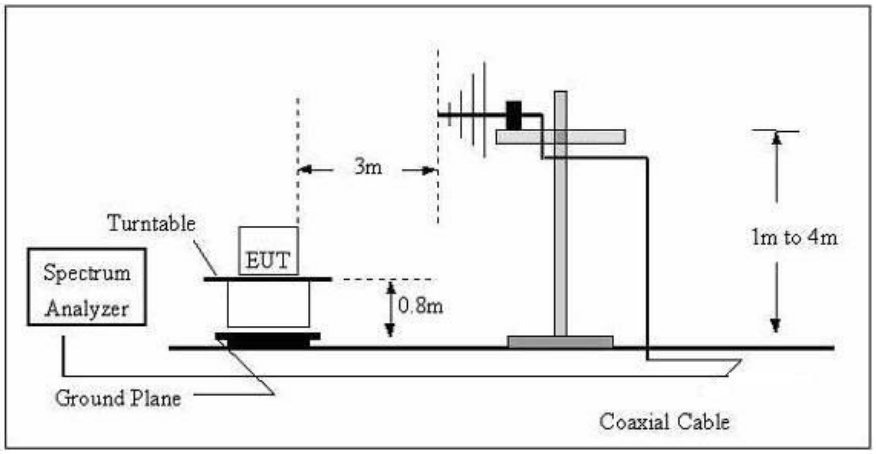

5.2 Rules and specifications

CFR 47 Part 15, section 15.205

Only spurious emissions are permitted in any of the frequency bands listed the tables in these sections.

MHz	MHz	MHz	GHz
0.090-0.110	16.42-16.423	399.9-410	4.5-5.15
\1\ 0.495-0.505	16.69475-16.69525	608-614	5.35-5.46
2.1735-2.1905	16.80425-16.80475	960-1240	7.25-7.75
4.125-4.128	25.5-25.67	1300-1427	8.025-8.5
4.17725-4.17775	37.5-38.25	1435-1626.5	9.0-9.2
4.20725-4.20775	73-74.6	1645.5-1646.5	9.3-9.5
6.215-6.218	74.8-75.2	1660-1710	10.6-12.7
6.26775-6.26825	108-121.94	1718.8-1722.2	13.25-13.4
6.31175-6.31225	123-138	2200-2300	14.47-14.5
8.291-8.294	149.9-150.05	2310-2390	15.35-16.2
8.362-8.366	156.52475-156.52525	2483.5-2500	17.7-21.4
8.37625-8.38675	156.7-156.9	2690-2900	22.01-23.12
8.41425-8.41475	162.0125-167.17	3260-3267	23.6-24.0
12.29-12.293.	167.72-173.2	3332-3339	31.2-31.8
12.51975-12.52025	240-285	3345.8-3358	36.43-36.5
12.57675-12.57725	322-335.4	3600-4400	(\2\)
13.36-13.41			

CFR 47 Part 15, section 15.209

The emissions from an intentional radiator shall not exceed the limits in the tables in these sections using an average detector

Frequency (MHz)	Field strength (microvolts/meter)	Measurement distance (meters)
0.009–0.490	2400/F(kHz)	300
0.490–1.705	24000/F(kHz)	30
1.705–30.0	30	30
30–88	100**	3
88–216	150**	3
216–960	200**	3
Above 960	500	3

Limit calculation and transfer to 3m distance as showed in the following table:

Frequency (MHz)	Limit (dBuV/m)	Distance (m)
0.009-0.490	20log(2400/F(KHz))+40log(300/3)	3
0.490-1.705	20log(24000/F(KHz))+40log(30/3)	3
1.705-30.0	69.5	3
30-88	40.0	3
88-216	43.5	3
216-960	46.0	3
Above 960	54.0	3

CFR 47 Part 15, section 15.35

When average radiated emission measurements are specified, the limit on the peak level of the radio Frequency emission is 20dB above the maximum permitted average emission limit.

Transmitter Spurious Emissions 9KHz-30MHz			
	9-150KHz	150-490KHz	490KHz-30MHz
Resolution Bandwidth	200Hz	9KHz	9KHz
Video Bandwidth	2KHz	100KHz	100KHz
Detector	Peak	Peak	Peak
Trace Mode	Max Hold	Max Hold	Max Hold
Sweep Time	Auto	Auto	Auto

5.3 Test Procedure

Measurement distance 3m
For the measurement range up to 30MHz in the following plots the field strength result from 3m Distance measurement are extrapolated to 300m and 30m distance respectively, by 40dB/decade, According to part 15.31(f)(2), per antenna factor scaling.
Measurements below 1000MHz are performed with a peak detector and compared to average limits, Measurements with an average detector are not required.

5.4 Test Result

PASS

For 9KHz-30MHz

Freq. (MHz)	Detector Mode (PK/QP/AV)	Reading (dBuV)	Factor (dB)	Actual FS (dBuV/m)	Limits 3m (dBuV/m)	Margin (dBuV/m)
0.110	PEAK	39.03	24.8	63.83	126.78	62.93
0.110	AV	23.77	24.8	48.57	106.78	58.21
0.125	PEAK	61.64	24.8	86.44	125.67	40.34
0.125	AV	47.21	24.8	72.01	105.67	33.66
0.486	PEAK	42.99	24.8	67.79	113.87	46.08
0.486	AV	27.39	25.03	52.42	93.87	41.45
0.500	QP	26.58	25.03	51.61	73.62	22.01

For 30MHz-1GHz

Remark: We tested the All Mode, the worst case (Full Load) was recorded.
Please refer to following diagram for individual

Antenna polarity: H

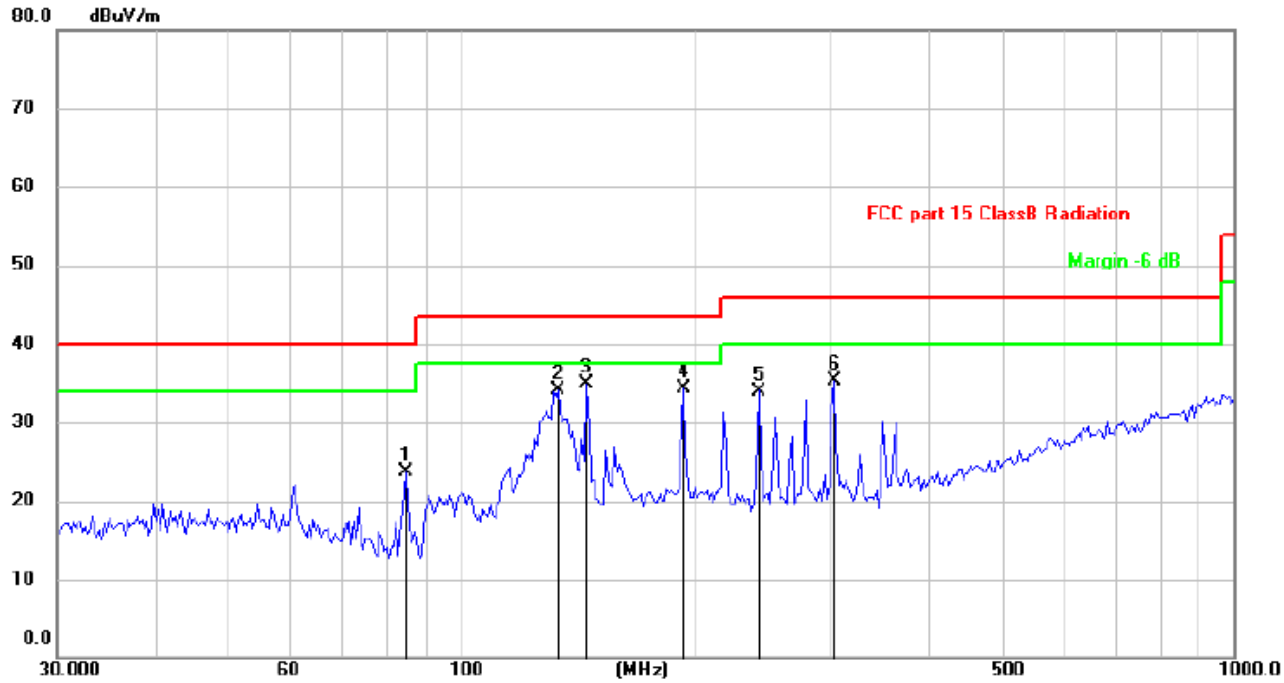

No.	Mk.	Freq.	Reading Level	Correct Factor	Measure-ment	Limit	Margin		Antenna Height	Table Degree	
		MHz	dBuV	dB	dBuV/m	dB/m	dB	Detector	cm	degree	Comment
1		84.7019	34.54	-10.92	23.62	40.00	-16.38	peak	100	342	
2		133.6188	41.31	-7.22	34.09	43.50	-9.41	peak	100	241	
3	*	145.3505	41.29	-6.47	34.82	43.50	-8.68	peak	100	12	
4		193.7727	43.27	-9.06	34.21	43.50	-9.29	peak	100	34	
5		242.5252	42.07	-8.07	34.00	46.00	-12.00	peak	100	71	
6		303.5437	40.59	-5.27	35.32	46.00	-10.68	peak	100	135	

Remark: Transd = Cable lose + Antenna factor - Pre-amplifier; Margin = Measurement - Limit

Antenna polarity: V

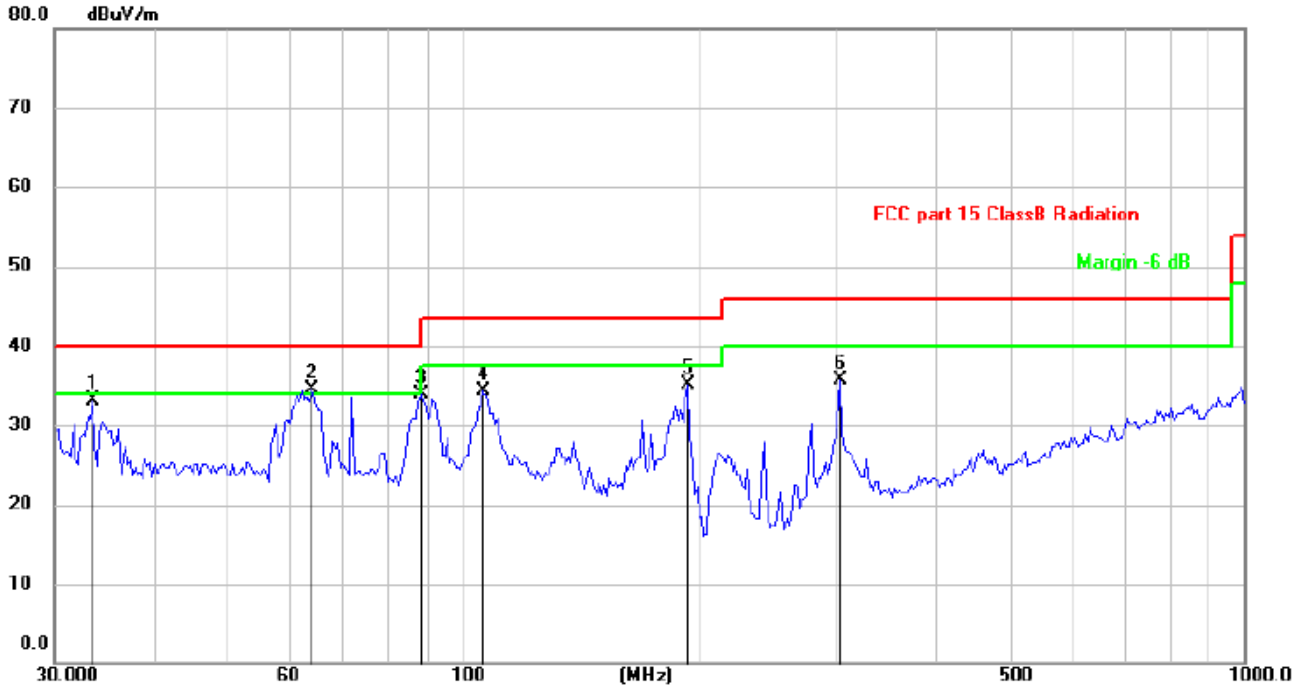

No.	Mk.	Freq.	Reading Level	Correct Factor	Measure-ment	Limit	Margin		Antenna Height	Table Degree	
		MHz	dBuV	dB	dBuV/m	dB/m	dB	Detector	cm	degree	Comment
1		33.5624	40.44	-7.34	33.10	40.00	-6.90	peak	100	35	
2	*	63.9827	42.33	-7.84	34.49	40.00	-5.51	peak	100	42	
3		88.3421	44.89	-10.91	33.98	43.50	-9.52	peak	100	72	
4		106.0126	43.94	-9.58	34.36	43.50	-9.14	peak	100	137	
5		193.7727	44.21	-9.06	35.15	43.50	-8.35	peak	100	124	
6		303.5437	40.89	-5.27	35.62	46.00	-10.38	peak	100	247	

Remark: Transd = Cable lose + Antenna factor - Pre-amplifier; Margin = Measurement - Limit

6 ANTENNA REQUIREMENT

Standard Applicable
For intentional device, according to FCC 47 CFR Section 15.203, an intentional radiator shall be designed to ensure that no antenna other than that furnished by the responsible party shall be used with the device.

Refer to statement below for compliance.
The manufacturer may design the unit so that the user can replace a broken antenna, but the use of a standard antenna jack or electrical connector is prohibited. Further, this requirement does not apply to intentional radiators that must be professionally installed.

Antenna Connected Construction

The antenna used in this product is a Coil Antenna, The directional gains of antenna used for transmitting is 0dBi.

ANTENNA

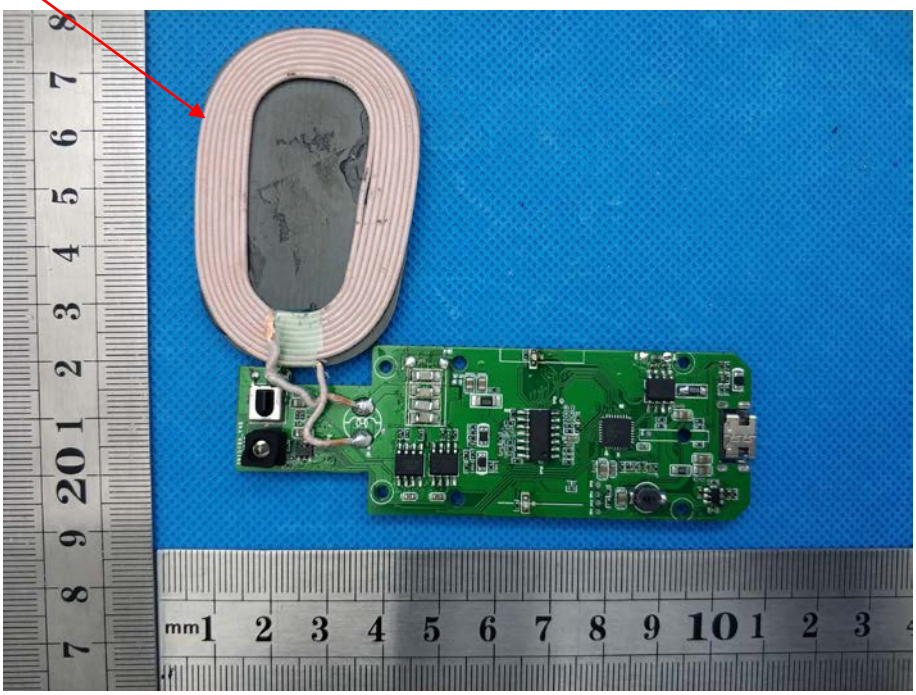

7. PHOTOGRAPH OF TEST

7.1 Radiated Emission

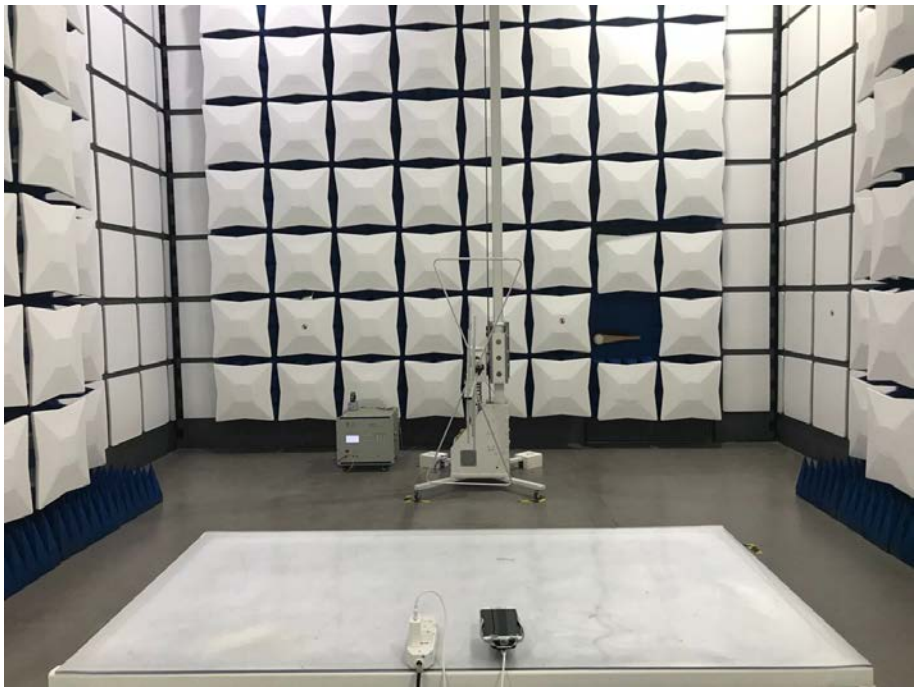

7.2 Conducted Emission

---------End of test report---------