Part No. 1002427

ISM or ISM & BT or GPS Stamp Metal Embedded SMT Antenna

868 MHz, 915 MHz, 1.575 GHz, 2.4 GHz

Supports: Wi-Fi applications, Agriculture, Automotive, Bluetooth, Tracking, Smart Home, Healthcare, Digital Signage

ISM or ISM & BT or GPS Stamp Metal Embedded Antenna

868-915 MHz, 1.575-1.606 GHz, 2.4 GHz

KEY BENEFITS

Versatile Antenna

1002427 can be used to support ISM or GPS independently or ISM and BT combined, allowing reduced BOM complexity while maintaining great performances.

Quicker Time-to-Market

By optimizing antenna size, performance and emissions, customer and regulatory specifications are more easily met.

Reliability

Products are the latest RoHS version compliant.

APPLICATIONS

- Embedded design
- Cellular, Headsets, Tablets
- Gateway, Access Point
- Handheld
- Telematics
- Tracking
- Healthcare
- M2M, Industrial devices
- Smart Grid
- OBD-II

KYOCERA AVX 1002427 stamp metal SMT antenna delivers the device designers' key needs for higher functionality and performance in smaller/thinner designs. This innovative antenna provides compelling advantages for all ISM, Bluetooth and GPS enabled devices.

Unique Form Factors Support Advanced Industrial Designs

Smaller, more efficient on board embedded antennas break through restrictive design rules and provide new freedom in component placement. 1002427 offers 3 configurations for tuning, ISM layout, ISM and BT layout or GPS layout.

Electrical Specifications

Typical performance on 110 x 55 mm PCB in free space. Different antenna layout location per each frequency configuration tested.

Frequency	ISM Layout 868-915 MHz	ISM & BT Layout 915 / 2450 MHz		GPS Layout 1560—1606 MHz
Peak Gain	1.0 dBi	3.0 dBi	3.4 dBi	1.8 dBi
Average Efficiency	62%	67%	61%	65%
VSWR Match	2.0:1 max			
Feed Point Impedance	50 ohms unbalanced			
Polarization	Linear			
Power Handling	2 Watt CW			

Mechanical Specifications & Ordering Part Number

Ordering Part Number	1002427
Size (mm)	31.2 x 2.28 x 3.9
Weight (grams)	0.16
Mounting	SMT, Through-Hole, (P&P)
Packaging	Tape & Reel, 5,400 pieces per box, 1,800 per reel
Demo Board	1002427-01

ISM / GPS / BT Stamp Metal KYOCERA AVX Antenna Specifications
KYOCERA AVX produces a wide variety of standard and custom antennas to meet user needs.

Antenna Dimensions (1002427)

Typical antenna dimensions (mm)

Part Number	A (mm)	B (mm)	C (mm)
1002427	31.2 ± 0.3	2.28 ± 0.3	3.9 ± 0.4

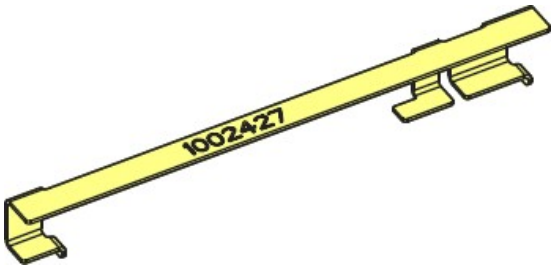

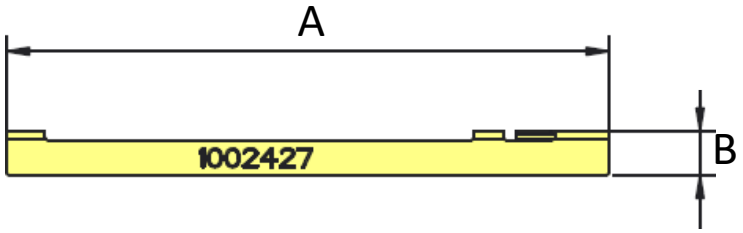

Top View

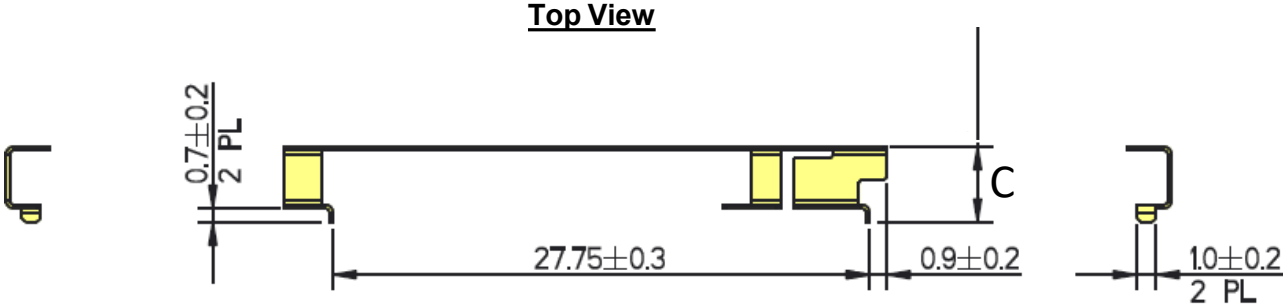

Height

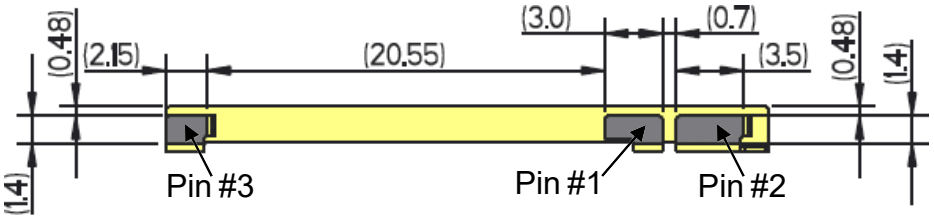

Bottom View

Pin#	Description
1	Feed
2	Ground
3	Dummy Pad

© 2021 KYOCERA AVX

tel +(1) 858.550.3820
email: eth.info@KYOCERA-AVX.com
Address:KYOCERA AVX One AVX Boulevard
Fountain Inn,SC 29644 USA

1002427 ISM or GPS layout performances (Single Band antenna)
KYOCERA AVX produces a wide variety of standard and custom antennas to meet user needs.

VSWR and Efficiency Plots (ISM layout or GPS layout, Single Band antenna)

Typical performance on 110 x 55 mm PCB

Single Band antenna layout (ISM or GPS)

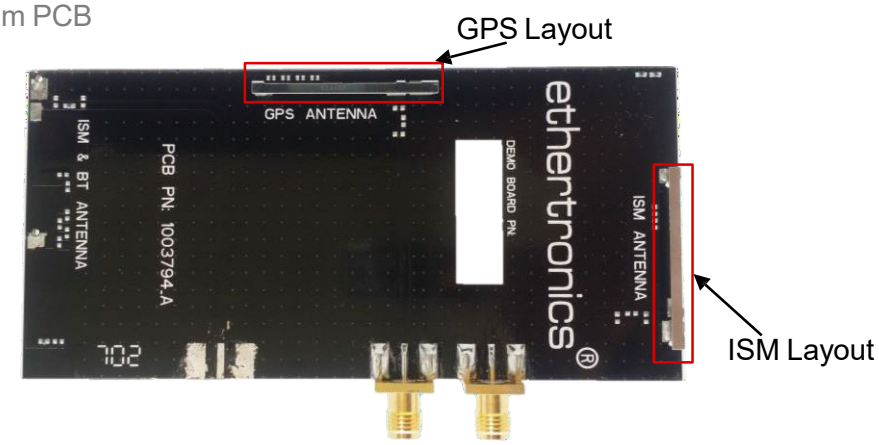

ISM VSWR

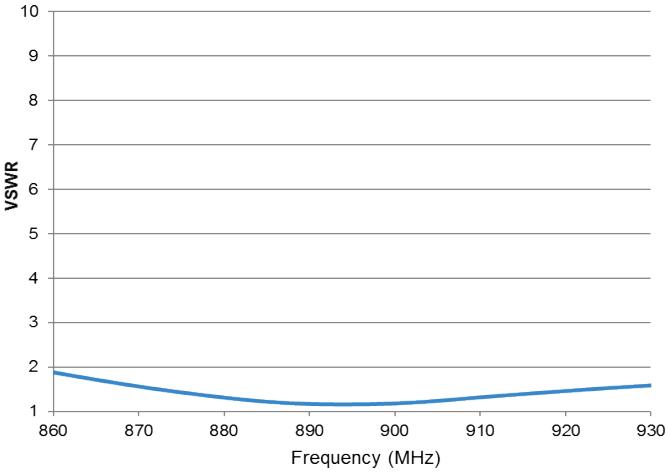

GPS VSWR

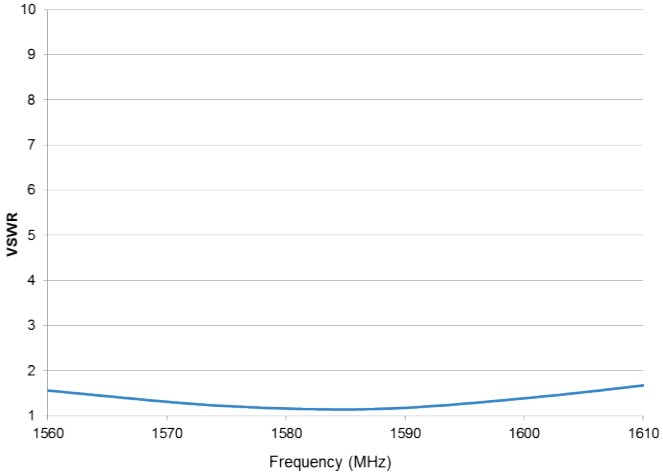

ISM Efficiency

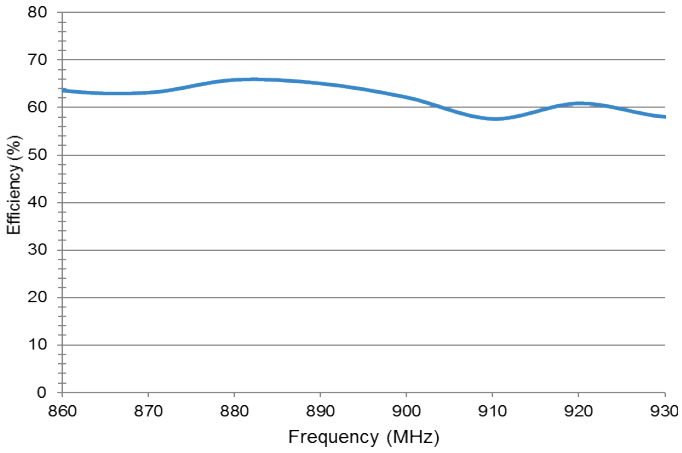

GPS Efficiency

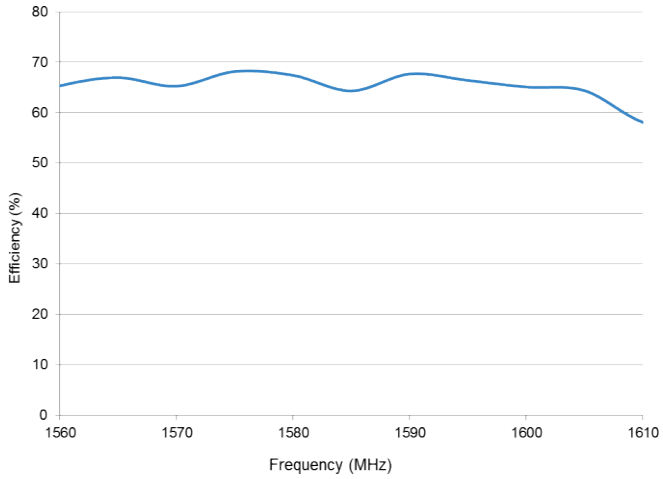

© 2021 KYOCERA AVX

tel +(1) 858.550.3820
email: eth.info@KYOCERA-AVX.com
Address:KYOCERA AVX One AVX Boulevard
Fountain Inn,SC 29644 USA

1002427 ISM or GPS layout performances (Single Band antenna)
KYOCERA AVX produces a wide variety of standard and custom antennas to meet user needs.

Antenna Radiation Patterns (ISM layout or GPS layout, Single Band antenna)

Typical performance on 110 x 55 mm PCB
Measured @ 870, 910, 1560, 1570, 1610 MHz

Single Band antenna (ISM Layout Orientation)

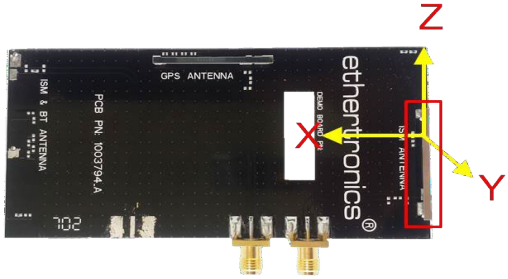

Single Band antenna (GPS Layout Orientation)

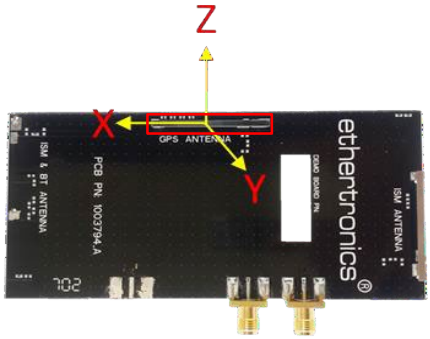

Measured at 870 / 910 MHz (ISM)

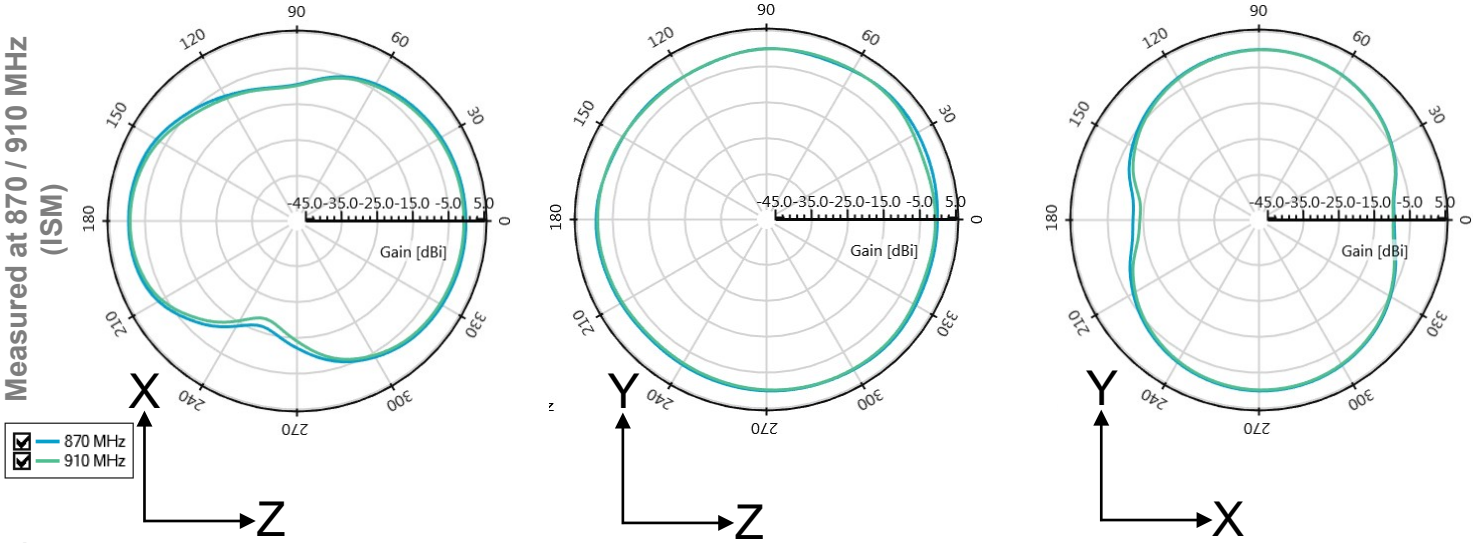

Measured at 1560, 1570, 1610 MHz (GPS)

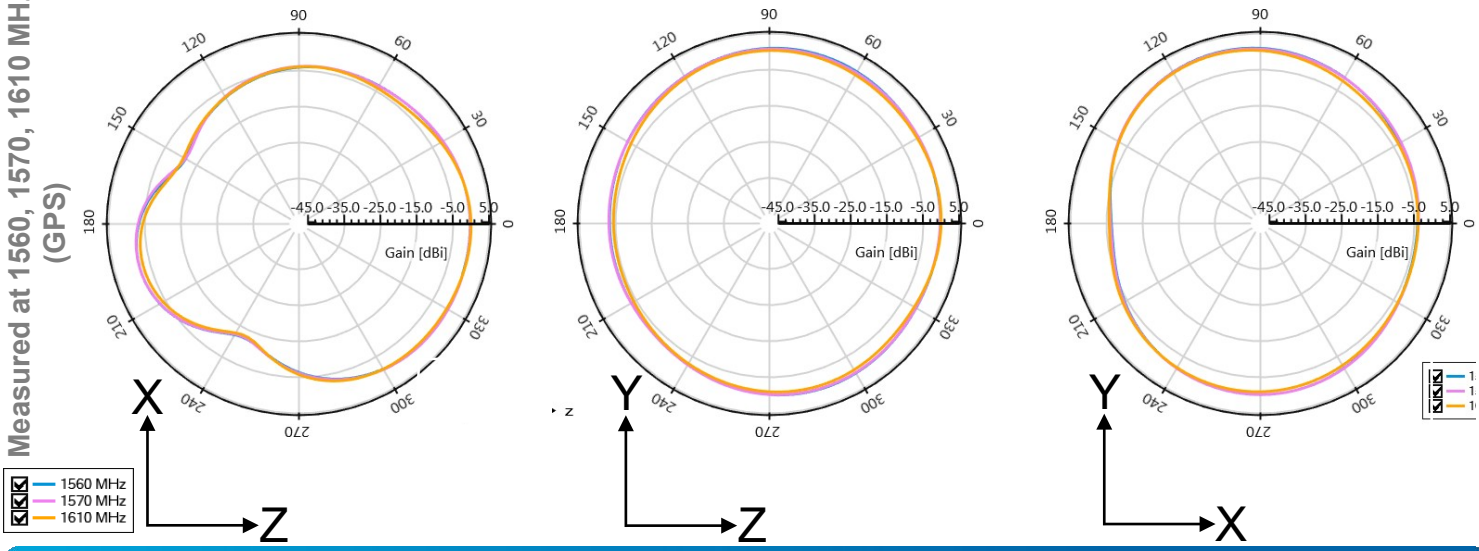

© 2021 KYOCERA AVX

tel +(1) 858.550.3820
email: eth.info@KYOCERA-AVX.com
Address:KYOCERA AVX One AVX Boulevard
Fountain Inn,SC 29644 USA

1002427 ISM & BT layout performances (Dual Band antenna)
KYOCERA AVX produces a wide variety of standard and custom antennas to meet user needs.

VSWR and Efficiency Plots (ISM and BT layout, Dual Band antenna)

Typical performance on 110 x 55 mm PCB

Dual Band antenna layout (ISM and BT)

ISM & BT Layout

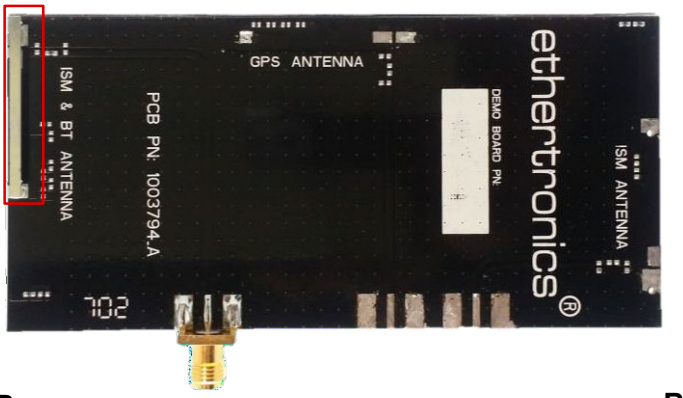

ISM VSWR

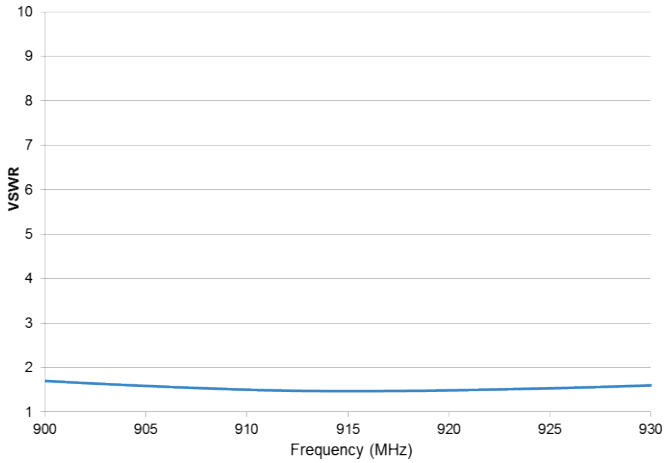

BT VSWR

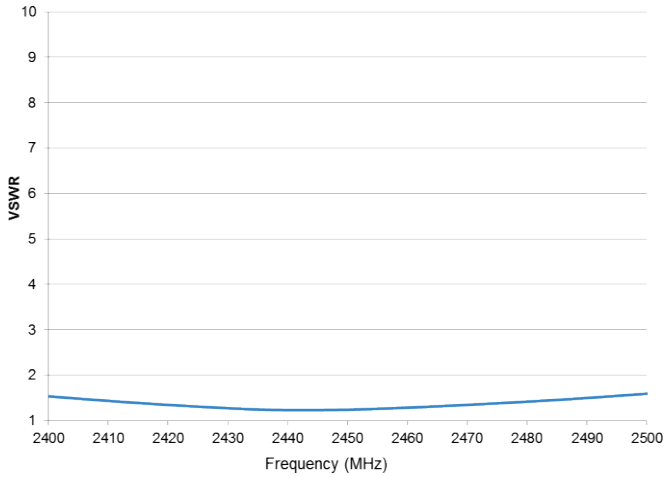

ISM Efficiency

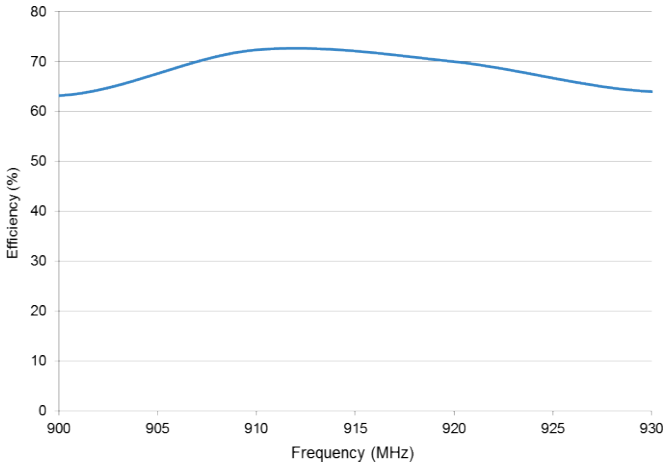

BT Efficiency

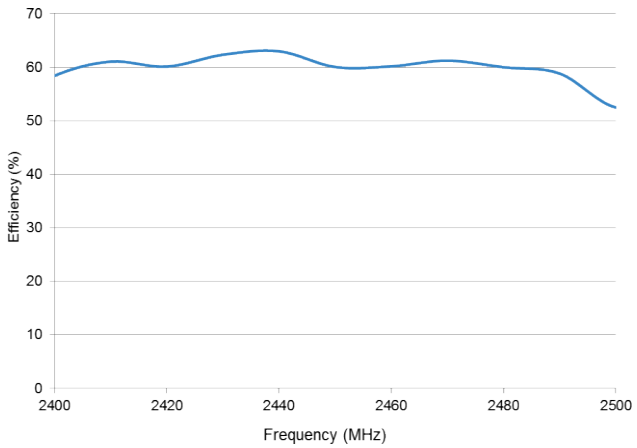

© 2021 KYOCERA AVX

tel +(1) 858.550.3820
email: eth.info@KYOCERA-AVX.com
Address:KYOCERA AVX One AVX Boulevard
Fountain Inn,SC 29644 USA

1002427 ISM & BT layout performances (Dual Band antenna)
KYOCERA AVX produces a wide variety of standard and custom antennas to meet user needs.

Antenna Radiation Patterns (ISM & BT layout, Dual Band antenna)

Typical performance on 110 x 55 mm PCB
Measured @ 910, 2450 MHz

Dual Band antenna
(ISM & BT Layout Orientation)

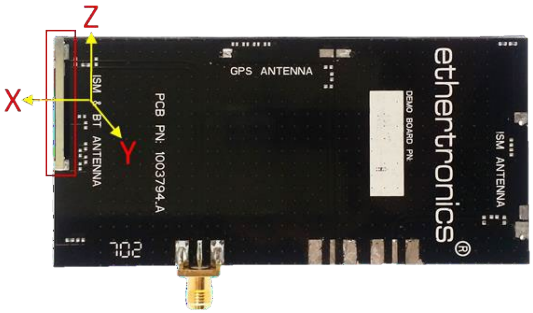

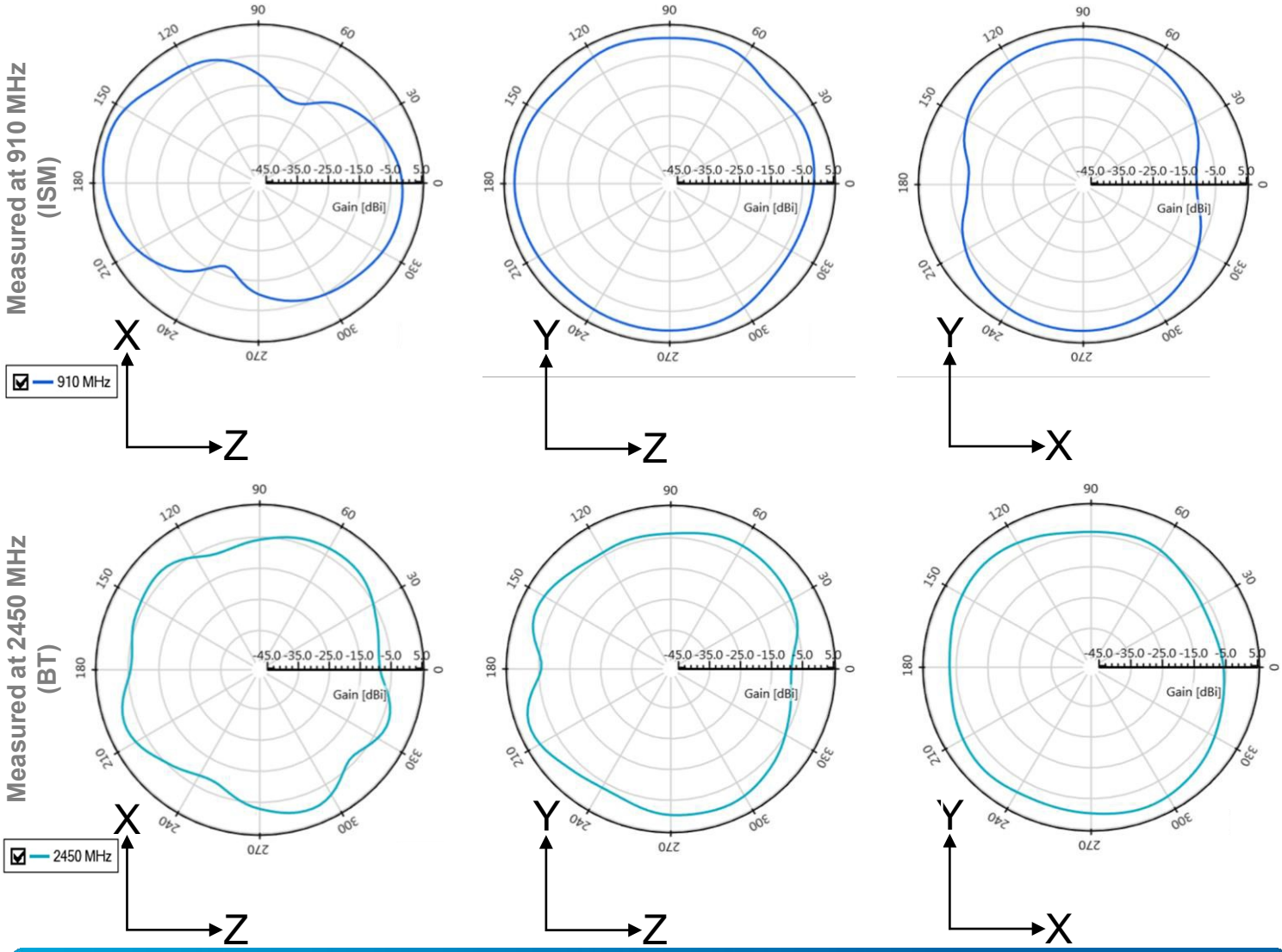

© 2021 KYOCERA AVX

tel +(1) 858.550.3820
email: eth.info@KYOCERA-AVX.com
Address:KYOCERA AVX One AVX Boulevard
Fountain Inn,SC 29644 USA

ISM / GPS / BT Stamp Metal KYOCERA AVX Antenna Specifications (GPS Single Band antenna)
KYOCERA AVX produces a wide variety of standard and custom antennas to meet user needs.

Antenna Layout (GPS Layout ONLY)

Typical layout dimensions (mm)

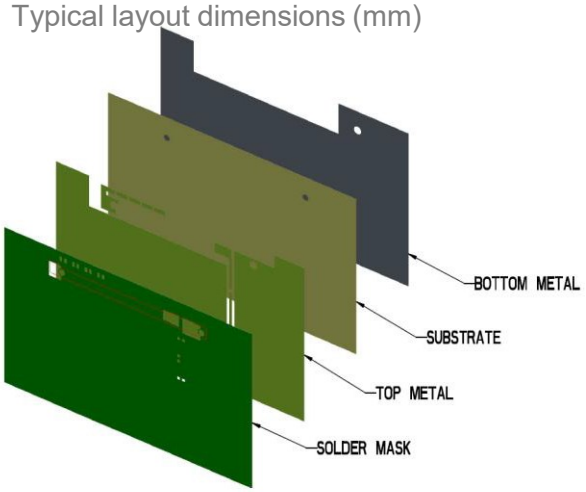

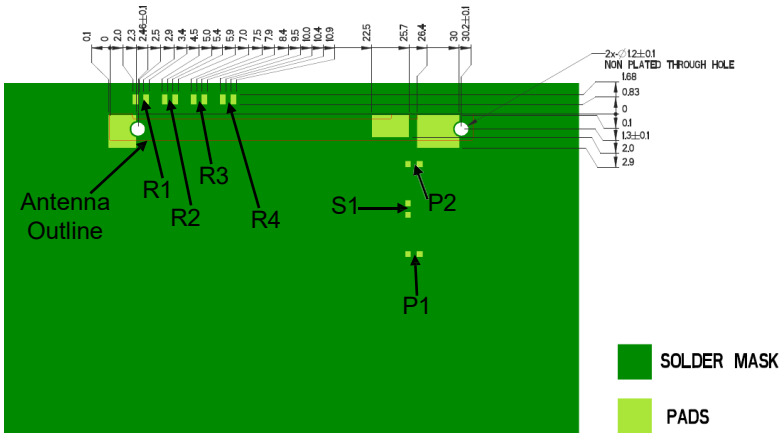

* VIAS: Diam. 0.2mm, (no vias on transmission lines).
Via holes must be covered by solder mask

Pin Descriptions

Pin#	Description
1	Feed
2	Ground
3	Dummy Pad

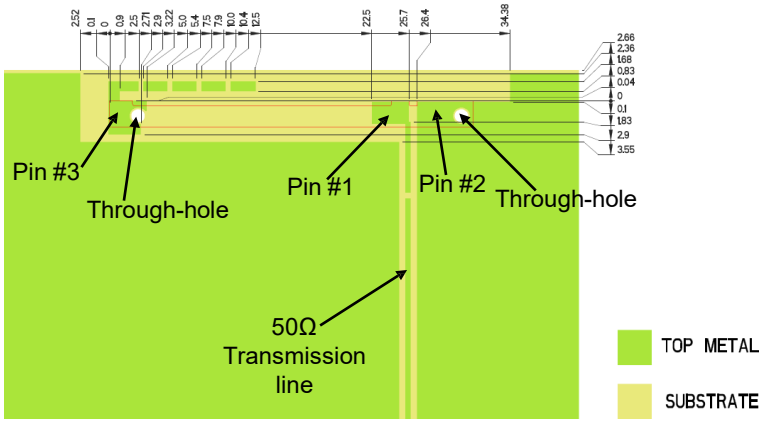

Matching & Tuning Component Values

Component	Value	Tolerance
P1	DNI	N/A
S1	0Ω	N/A
P2	3.0pF	±0.05pF
R1 - R4	DNI	N/A

*Actual matching values depend on customer design

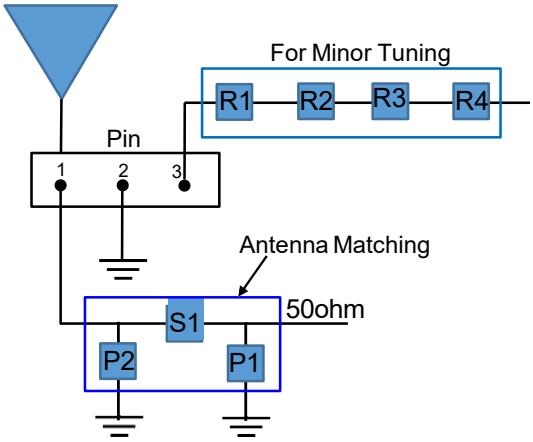

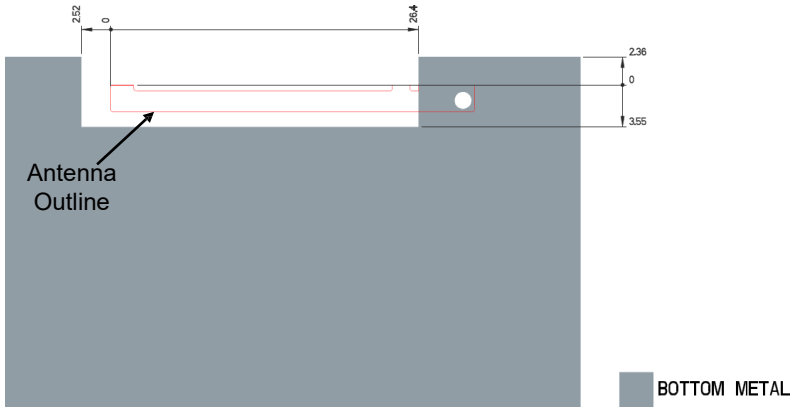

© 2021 KYOCERA AVX

tel +(1) 858.550.3820
email: eth.info@KYOCERA-AVX.com
Address:KYOCERA AVX One AVX Boulevard
Fountain Inn,SC 29644 USA

ISM / GPS / BT Stamp Metal KYOCERA AVX Antenna Specifications (ISM Single Band antenna)
KYOCERA AVX produces a wide variety of standard and custom antennas to meet user needs.

Antenna Layout (ISM Layout ONLY)

Typical layout dimensions (mm)

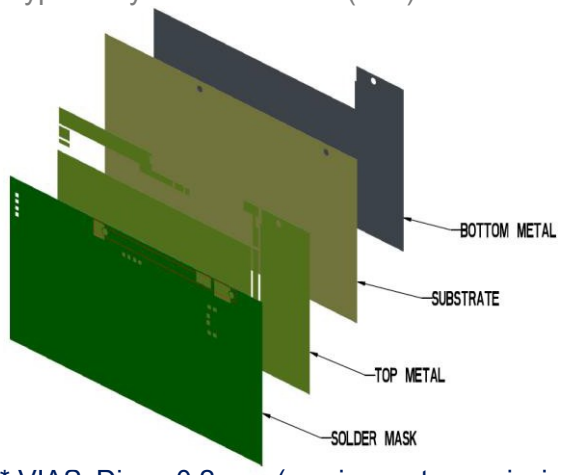

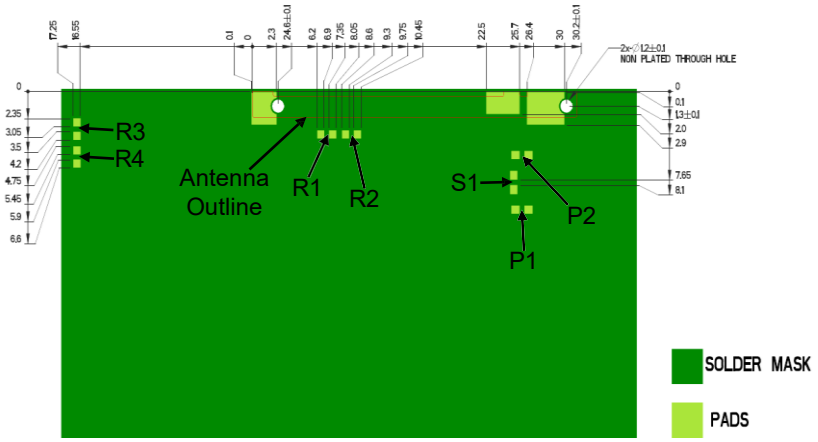

* VIAS: Diam. 0.2mm, (no vias on transmission lines).
Via holes must be covered by solder mask

Pin Descriptions

Pin#	Description
1	Feed
2	Ground
3	Dummy Pad

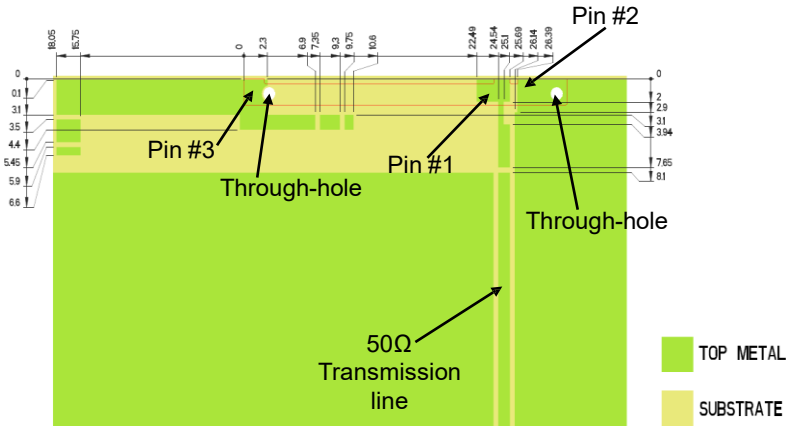

Matching & Tuning Component Values

Component	Value	Tolerance
P1	DNI	N/A
S1	5.6pF	±0.05pF
P2	1.8pF	±0.05pF
R1 - R4	0Ω	N/A

*Actual matching values depend on customer design

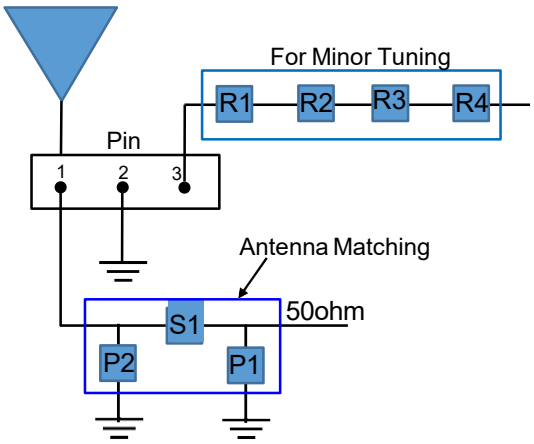

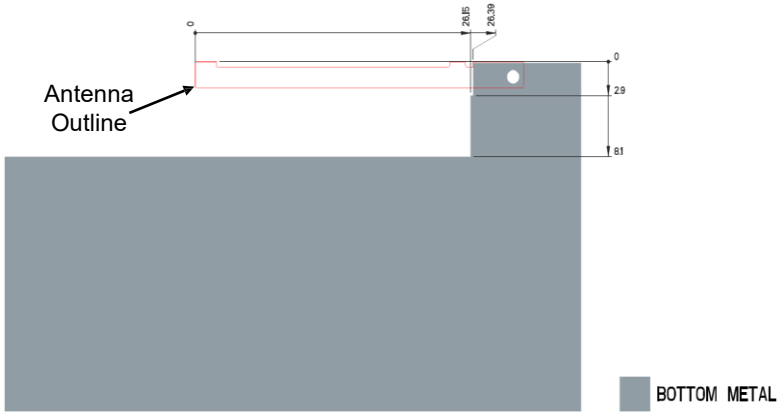

© 2021 KYOCERA AVX

tel +(1) 858.550.3820
email: eth.info@KYOCERA-AVX.com
Address:KYOCERA AVX One AVX Boulevard
Fountain Inn,SC 29644 USA

ISM / GPS / BT Stamp Metal KYOCERA AVX Antenna Specifications (ISM & BT Dual Band antenna)
KYOCERA AVX produces a wide variety of standard and custom antennas to meet user needs.

Antenna Layout (ISM & BT Layout ONLY)

Typical layout dimensions (mm)

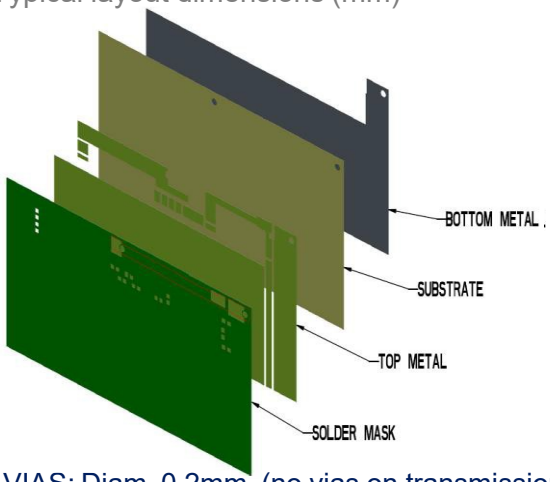

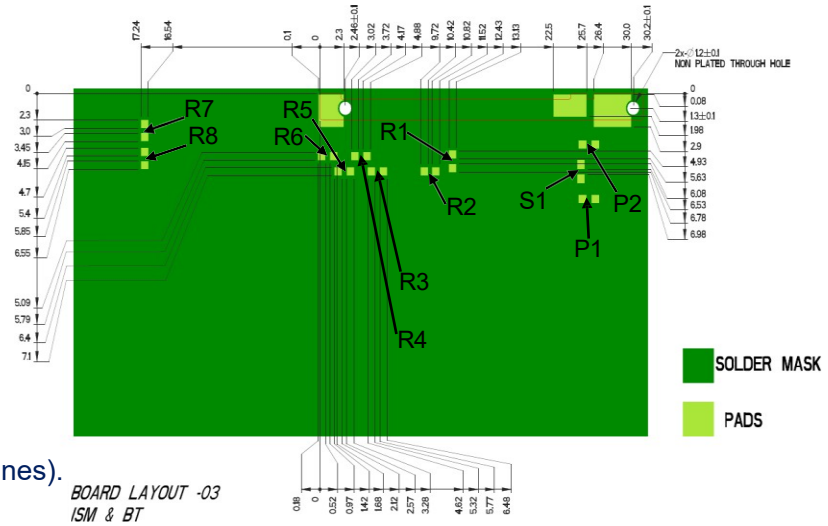

* VIAS: Diam. 0.2mm, (no vias on transmission lines).
Via holes must be covered by solder mask

Pin Descriptions

Pin#	Description
1	Feed
2	Ground
3	Dummy Pad

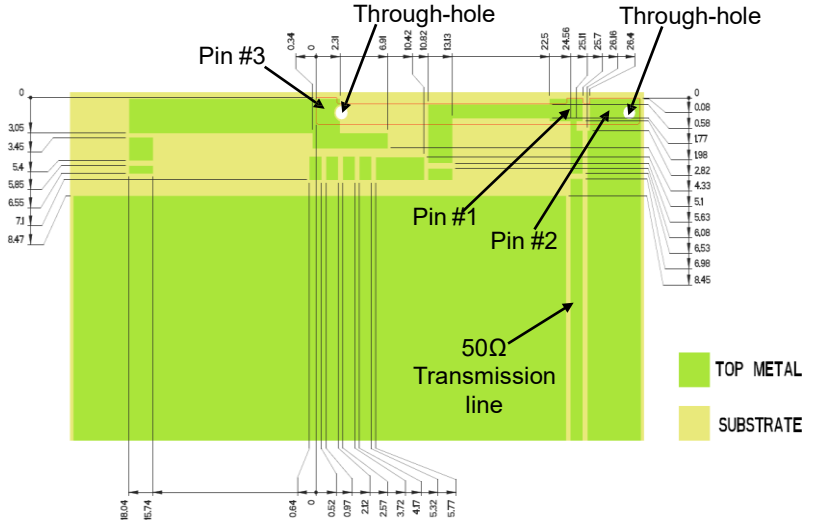

Matching & Tuning Component Values

Component	Value	Tolerance
P1	DNI	N/A
S1	5.0pF	±0.05pF
P2	DNI	N/A
R1 – R8	DNI	N/A

*Actual matching values depend on customer design

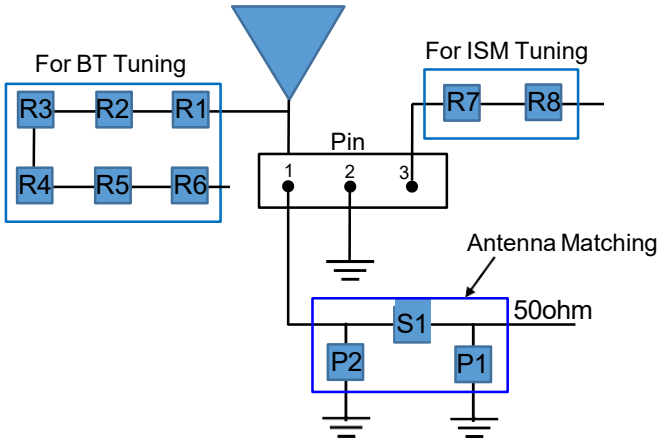

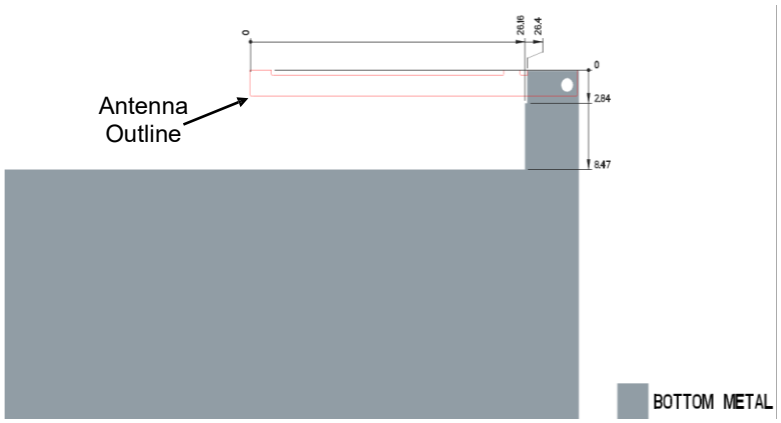

© 2021 KYOCERA AVX

tel +(1) 858.550.3820
email: eth.info@KYOCERA-AVX.com
Address:KYOCERA AVX One AVX Boulevard
Fountain Inn,SC 29644 USA

Antenna Layout cont. (through hole mounting)

Typical layout dimensions (mm)

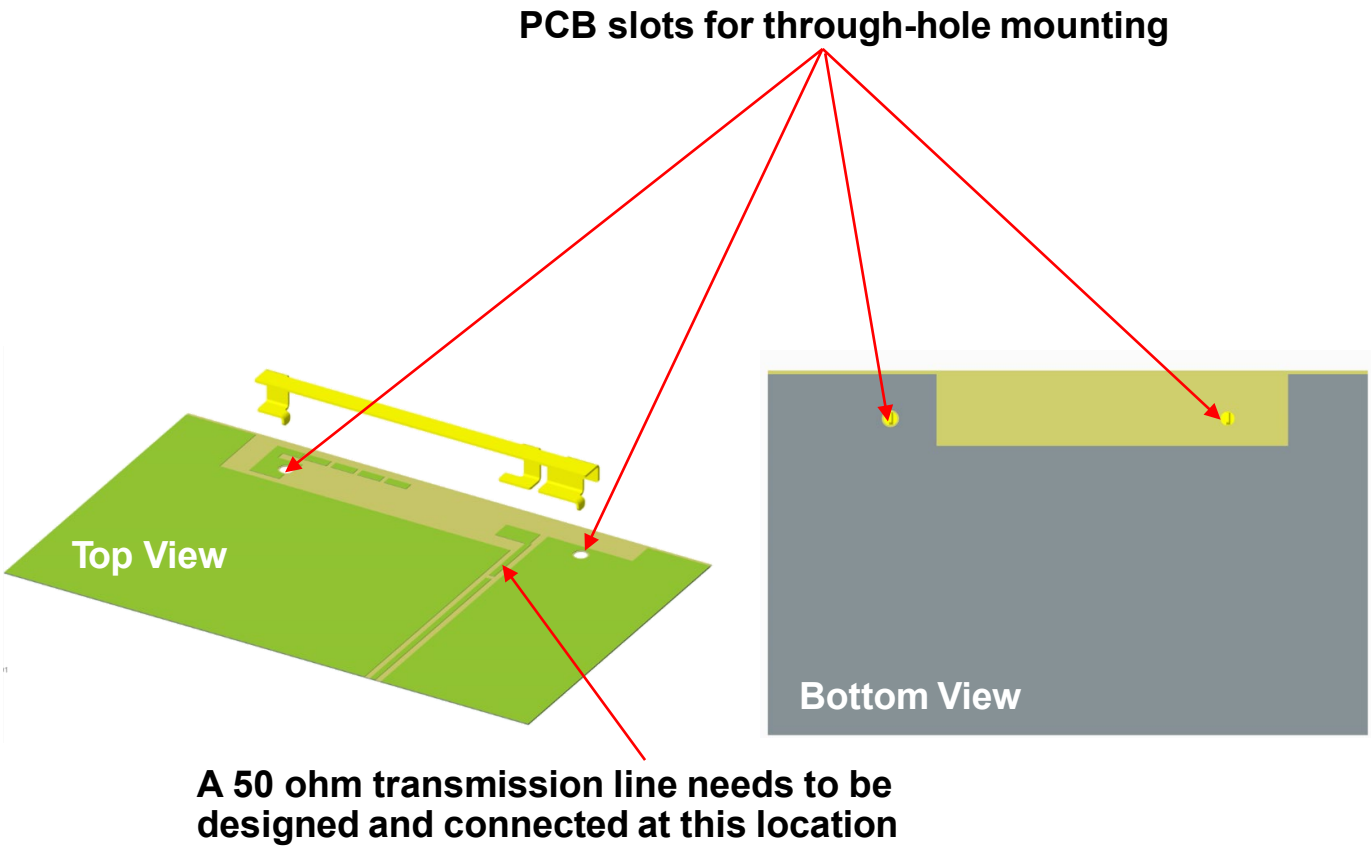

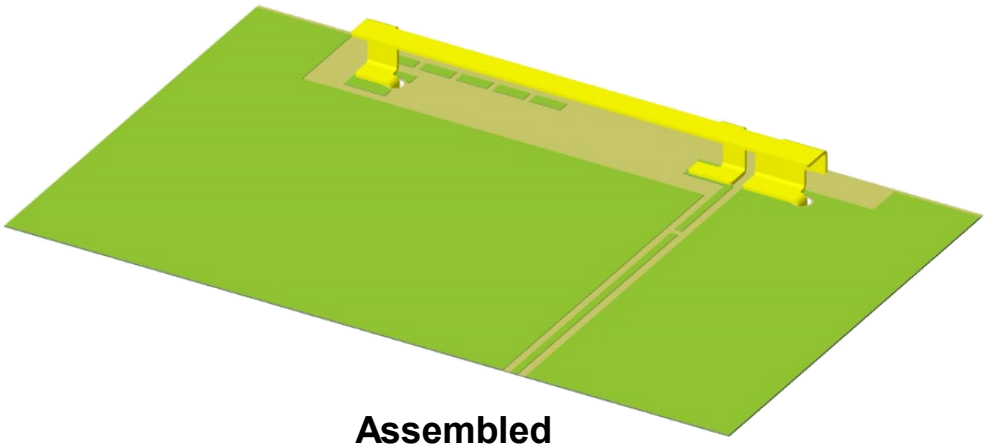

Assembled

© 2021 KYOCERA AVX

tel +(1) 858.550.3820
email: eth.info@KYOCERA-AVX.com
Address:KYOCERA AVX One AVX Boulevard
Fountain Inn,SC 29644 USA