Prüfbericht - Produkte
Test Report - Products

TÜVRheinland®

Prüfbericht-Nr.: *Test report no.:*	**NN23YOLC 001**	**Auftrags-Nr.:** *Order no.:*	**168399325**	**Seite 1 von 20** *Page 1 of 20*
Kunden-Referenz-Nr.: *Client reference no.:*	**N/A**	**Auftragsdatum:** *Order date:*	2022-12-07	
Auftraggeber: *Client:*	**Maersk Container Industri AS** Bjerndrupvej 47, 6360 Tinglev, Denmark			
Prüfgegenstand: *Test item:*	Sekstant BLE Transceiver			
Bezeichnung / Typ-Nr.: *Identification / Type no.:*	839215ID182			
Auftrags-Inhalt: *Order content:*	Test Report			
Prüfgrundlage: *Test specification:*	CFR47 FCC Part 15: Subpart C Section 15.247 RSS-247 Issue 2 February 2017 RSS-Gen Issue 5 February 2021 ANSI C63.10:2013			
Wareneingangsdatum: *Date of sample receipt:*	2022-12-07	Please refer to Photo Document		
Prüfmuster-Nr.: *Test sample no:*	A003323336-001-012			
Prüfzeitraum: *Testing period:*	2022-12-07 - 2023-02-27			
Ort der Prüfung: *Place of testing:*	TÜV Rheinland (Shenzhen) Co., Ltd.			
Prüflaboratorium: *Testing laboratory:*	TÜV Rheinland (Shenzhen) Co., Ltd.			
Prüfergebnis*: *Test result*:*	Pass			
geprüft von: *tested by:*	X Breeze Jiang Signed by: Breeze Jiang	**genehmigt von:** *authorized by:*	X Lin Lin Signed by: Lin Lin	
Datum: *Date:* 2023-03-24		**Ausstellungsdatum:** *Issue date:* 2023-03-24		
Stellung / *Position:*	Senior Project Engineer	**Stellung** / *Position:*	Reviewer	
Sonstiges / *Other:*	FCC ID: 2AUZI-839215ID182 IC: 25568-839215ID182 HVIN: 839215ID182			
Zustand des Prüfgegenstandes bei Anlieferung: *Condition of the test item at delivery:*	Prüfmuster vollständig und unbeschädigt *Test item complete and undamaged*			

* Legende:	1 = sehr gut	2 = gut	3 = befriedigend	4 = ausreichend	5 = mangelhaft
	P(ass) = entspricht o.g. Prüfgrundlage(n)		F(ail) = entspricht nicht o.g. Prüfgrundlage(n)	N/A = nicht anwendbar	N/T = nicht getestet
** Legend:*	*1 = very good*	*2 = good*	*3 = satisfactory*	*4 = sufficient*	*5 = poor*
	P(ass) = passed a.m. test specification(s)		*F(ail) = failed a.m. test specification(s)*	*N/A = not applicable*	*N/T = not tested*

Dieser Prüfbericht bezieht sich nur auf das o.g. Prüfmuster und darf ohne Genehmigung der Prüfstelle nicht auszugsweise vervielfältigt werden. Dieser Bericht berechtigt nicht zur Verwendung eines Prüfzeichens.
This test report only relates to the a. m. test sample. Without permission of the test center this test report is not permitted to be duplicated in extracts. This test report does not entitle to carry any test mark.
V05

Test Summary

5.1.1 ANTENNA REQUIREMENT
RESULT: *Pass*

5.1.2 MAXIMUM PEAK CONDUCTED OUTPUT POWER
RESULT: *Pass*

5.1.3 CONDUCTED POWER SPECTRAL DENSITY
RESULT: *Pass*

5.1.4 6DB BANDWIDTH
RESULT: *Pass*

5.1.5 99% BANDWIDTH
RESULT: *Pass*

5.1.6 CONDUCTED SPURIOUS EMISSIONS MEASURED IN 100 KHZ BANDWIDTH
RESULT: *Pass*

5.1.7 RADIATED SPURIOUS EMISSION
RESULT: *Pass*

5.1.8 CONDUCTED EMISSION ON AC MAINS
RESULT: *Not applicable*

Contents

1 GENERAL REMARKS 4
1.1 COMPLEMENTARY MATERIALS 4
2 TEST SITES 5
2.1 TEST FACILITIES 5
2.2 LIST OF TEST AND MEASUREMENT INSTRUMENTS 5
2.3 TRACEABILITY 6
2.4 CALIBRATION 6
2.5 MEASUREMENT UNCERTAINTY 6
2.6 LOCATION OF ORIGINAL DATA 6
2.7 STATUS OF FACILITY USED FOR TESTING 6
3 GENERAL PRODUCT INFORMATION 7
3.1 PRODUCT FUNCTION AND INTENDED USE 7
3.2 RATINGS AND SYSTEM DETAILS 7
3.3 INDEPENDENT OPERATION MODES 8
3.4 NOISE GENERATING AND NOISE SUPPRESSING PARTS 8
3.5 SUBMITTED DOCUMENTS 8
4 TEST SET-UP AND OPERATION MODES 9
4.1 PRINCIPLE OF CONFIGURATION SELECTION 9
4.2 TEST OPERATION AND TEST SOFTWARE 9
4.3 SPECIAL ACCESSORIES AND AUXILIARY EQUIPMENT 9
4.4 COUNTERMEASURES TO ACHIEVE EMC COMPLIANCE 9
4.5 TEST SETUP DIAGRAM 10
5 TEST RESULTS 12
5.1 TRANSMITTER REQUIREMENT & TEST SUITES 12
5.1.1 Antenna Requirement 12
5.1.2 Maximum Peak Conducted Output Power 13
5.1.3 Conducted Power Spectral Density 14
5.1.4 6dB Bandwidth 15
5.1.5 99% Bandwidth 16
5.1.6 Conducted Spurious Emissions Measured in 100 kHz Bandwidth 17
5.1.7 Radiated Spurious Emission 18
5.1.8 Conducted Emission on AC Mains 19
6 PHOTOGRAPHS OF THE TEST SET-UP 20
7 LIST OF TABLES 20

1 General Remarks

1.1 Complementary Materials

All attachments are integral parts of this test report. This applies especially to the following appendix:

Appendix A: Photographs of the Test Set-up

Appendix B: Test Results of Bluetooth LE & Conducted Emission

2 Test Sites

2.1 Test Facilities

TÜV Rheinland (Shenzhen) Co., Ltd.
362 Huanguan Road Middle Longhua District, Shenzhen 518110 People's Republic of China

FCC Accreditation Designation No.: CN1260
ISED wireless device testing laboratory: 25069

2.2 List of Test and Measurement Instruments

Table 1: List of Test and Measurement Equipment

Radio Spectrum Testing (TS8997)				
Equipment	**Manufacturer**	**Model**	**Serial No.**	**Cal. until**
Signal Analyzer	R&S	FSV 40	101441	2023-08-01
OSP	R&S	OSP 150	101017	2023-11-21
Control PC	DELL	OptiPlex 7050	FTJZ9P2	N/A
Test Software	R&S	WMS32 (V11.00.00)	N/A	N/A
Power Meter	R&S	NRP2	107105	2023-11-21
Wideband Power Sensor	R&S	NRP-Z81	105677	2023-08-01
Shielding Room 8#	Albatross	SR8	APC17151-SR8	2024-06-22
Unwanted Emission Testing (TS9975)				
Equipment	**Manufacturer**	**Model**	**Serial No.**	**Cal. until**
EMI Test Receiver	R&S	ESR 7	102021	2023-08-02
Signal Analyzer	R&S	FSV 40	101439	2023-08-01
System Controller Interface	R&S	SCI-100	S10010038	N/A
Filterbank	R&S	Wlan	100759	2023-08-01
OSP	R&S	OSP 120	102040	N/A
Pre-amplifier	R&S	SCU08F1	08320031	2023-08-02
Amplifier	R&S	SCU-18F	180070	2023-08-02
Amplifier	R&S	SCU40A	100475	2023-08-02
Trilog Broadband Antenna (30 MHz - 7 GHz)	Schwarzbeck	VULB 9162	193	2024-08-06
Double-Ridged Antenna (1 -18 GHz)	ETS-LINDGREN	3117	00218717	2024-08-06
Wideband Ridged Horn Antenna (18-40 GHz)	Steatite	QMS-00880	19067	2024-08-27
Active Loop Antenna	Schwarzbeck	FMZB 1513	302	2023-08-06
Test software	R&S	EMC32 (V10.60.10)	N/A	N/A
Control PC	Dell	OptiPlex 7050	36NV9P2	N/A
3m Semi-Anechoic Chamber	Albatross	SAC-3m	APC17151-SAC	2024-06-22

Conducted Emission				
Equipment	**Manufacturer**	**Model No.**	**Serial No.**	**Cal. Until**
EMI Test Receiver	R&S	ESR3	102428	2023-07-31

Artificial Mains Network	R&S	ENV216	102333	2023-08-01
EMC32 test software	R&S	EMC32(Ver.10.50.00)	N/A	N/A

2.3 Traceability

All measurement equipment calibrations are traceable to NIM (National Institute of Metrology) or where calibration is performed in other countries, to equivalent nationally recognized standards organizations.

2.4 Calibration

Equipment requiring calibration is calibrated periodically by the manufacturer or according to manufacturer's specifications. Additionally all equipment is verified for proper performance on a regular basics using in house standards or comparisons.

2.5 Measurement Uncertainty

The estimated combined standard uncertainty for radiated emissions and conducted emissions measurements as below table.

Parameter	Uncertainty (k=2)
RF output power, conducted	± 0.99 dB
Occupied Channel Bandwidth	± 2.08 %
RF power density, conducted	± 0.99 dB
Unwanted Emissions, conducted	± 0.89 dB
All emissions, radiated	±4.17 dB
Conducted Emission, (9kHz to 150kHz)/(150kHz to 30MHz)	± 3.70 dB / ± 3.30 dB

2.6 Location of Original Data

The original copies of all test data taken during actual testing were attached at Appendix A & B of this report and delivered to the applicant. A copy has been retained in the TÜV Rheinland (Shenzhen) Co., Ltd. file for certification follow-up purposes.

2.7 Status of Facility Used for Testing

The TÜV Rheinland (Shenzhen) Co., Ltd. Test facility located at 362 Huanguan Road Middle Longhua District, Shenzhen 518110 People's Republic of China is listed on the US Federal Communications Commission list of facilities approved to perform measurements.

3 General Product Information

3.1 Product Function and Intended Use

The EUT is a Sekstant BLE Transceiver, which supports Bluetooth low energy wireless technologies.

For details refer to the User Manual, Technical Description and Circuit Diagram.

3.2 Ratings and System Details

Table 2: Technical Specification of EUT

General Information of EUT	Value
Kind of Equipment:	Sekstant BLE Transceiver
Type Designation:	839215ID182
Trademark:	N/A
FCC ID:	2AUZI-839215ID182
IC:	25568-839215ID182
HVIN:	839215ID182
Operating Voltage:	DC 12V
Operating Temperature Range:	-40 °C ~ +50 °C
Technical Specification of Bluetooth LE	
Frequency Range:	2402 MHz to 2480 MHz
Type of Modulation:	GFSK
Channel Number:	40 channels
Channel Separation:	2 MHz
Data rate	1 Mbps
Antenna Type:	PIFA Antenna
Antenna Gain:	2.14 dBi

Table 3: RF Channel and Frequency of Bluetooth Low Energy

RF Channel	Frequency (MHz)	RF Channel	Frequency (MHz)	RF Channel	Frequency (MHz)	RF Channel	Frequency (MHz)
00	**2402.00**	10	2422.00	20	2442.00	30	2462.00
01	2404.00	11	2424.00	21	2444.00	31	2464.00
02	2406.00	12	2426.00	22	2446.00	32	2466.00
03	2408.00	13	2428.00	23	2448.00	33	2468.00
04	2410.00	14	2430.00	24	2450.00	34	2470.00
05	2412.00	15	2432.00	25	2452.00	35	2472.00
06	2414.00	16	2434.00	26	2454.00	36	2474.00
07	2416.00	17	2436.00	27	2456.00	37	2476.00
08	2418.00	18	2438.00	28	2458.00	38	2478.00
09	2420.00	**19**	**2440.00**	29	2460.00	**39**	**2480.00**

3.3 Independent Operation Modes

The basic operation modes are:

A. On, Bluetooth LE transmitting mode
   1) Low Channel
   2) Middle Channel
   3) High Channel

B. On, Normal operation with Bluetooth mode

C. Off

3.4 Noise Generating and Noise Suppressing Parts

Refer to Circuit Diagram for further details.

3.5 Submitted Documents

- Application Form
- User Manual
- FCC/IC Label and Location Info

4 Test Set-up and Operation Modes

4.1 Principle of Configuration Selection

Radio Spectrum: The equipment under test (EUT) was configured at its highest power output in order to measure its highest possible radiation and conducted level. The test modes were adapted accordingly in reference to the instructions for use.

Emission: The equipment under test (EUT) was configured to measure its highest possible radiation level. The test modes were adapted accordingly in reference to the instructions for use.

4.2 Test Operation and Test Software

Test operation refers to test setup in chapter 5. All tests were performed according to the procedures in ANSI C63.10: 2013.

Table 4: Test environments

Environment Parameter	Values During Tests		
	Temperature	Voltage (Battery operated)	Relative Humidity
NTNV	25°C±2°C	DC 12V	Ambient

Table 5: Test channel and frequency of Bluetooth LE

Mode	Test Channels (MHz)	Remark
Transmitting	L/M/H: 2402MHz, 2440MHz, 2480MHz	--

4.3 Special Accessories and Auxiliary Equipment

Table 6: Auxiliary Equipment Used during Test

Description	Manufacturer	Model	S/N	Rating
Laptop	Lenovo	T480	PF-16A6N8	N/A

4.4 Countermeasures to Achieve EMC Compliance

The test sample which has been tested contained the noise suppression parts as described in the Technical Construction File (TCF).

No additional measures were employed to achieve compliance.

4.5 Test Setup Diagram

Diagram of Measurement Configuration for Radiation Test (Below 30MHz)

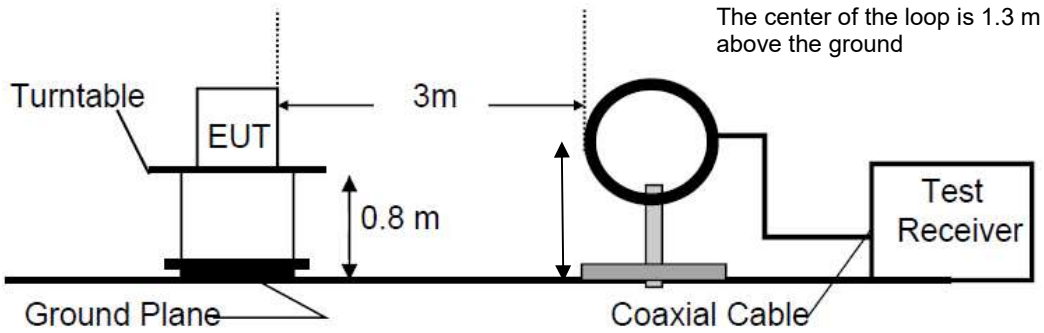

Diagram of Measurement Configuration for Radiation Test (Below 1GHz)

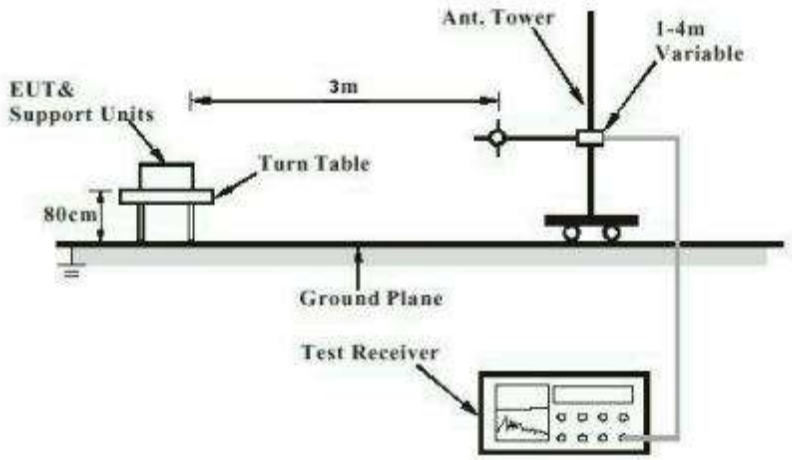

Diagram of Measurement Configuration for Radiation Test (Above 1GHz)

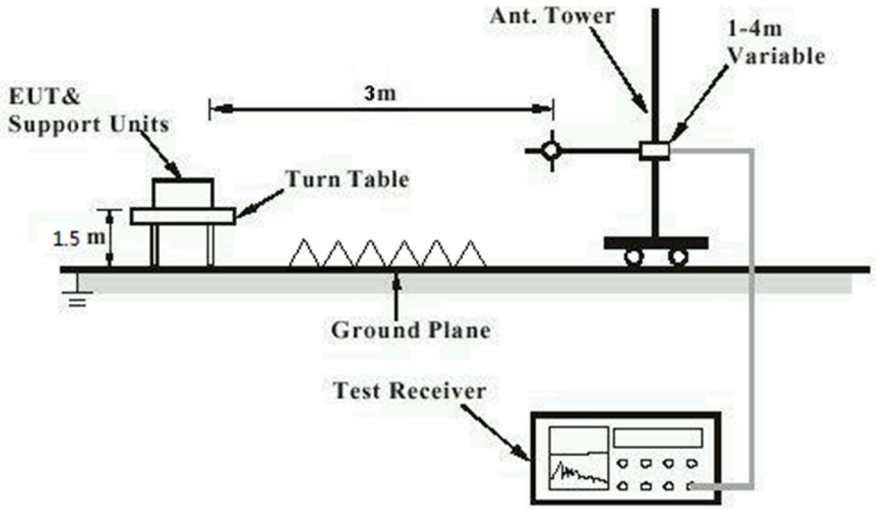

Diagram of Measurement Configuration for Mains Conduction Measurement

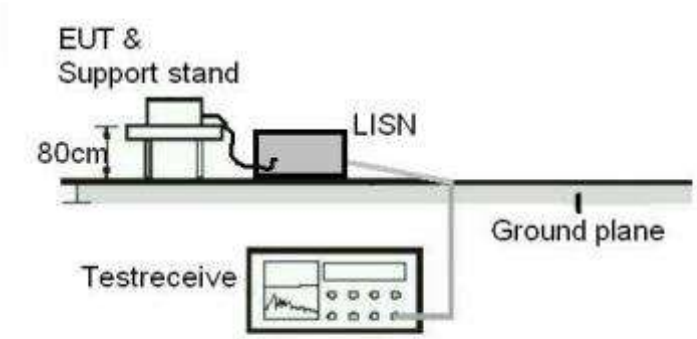

Diagram of Measurement Configuration for Conducted Transmitter Measurement

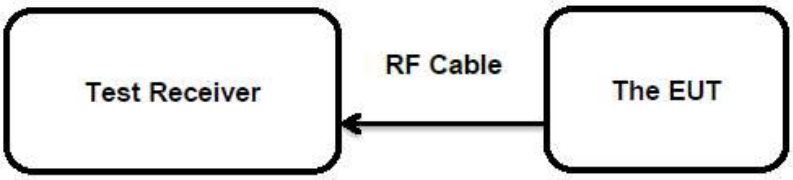

5 Test Results

5.1 Transmitter Requirement & Test Suites

5.1.1 Antenna Requirement

RESULT: **Pass**

Test Specification

Test standard	:	FCC Part 15.247(b)(4) and Part 15.203 RSS-Gen Section 6.8

According to the manufacturer declared, the EUT has a PIFA antenna, the gain of antenna is 2.14 dBi, which that permanent attachment and no consideration of replacement.

Therefore the EUT is considered sufficient to comply with the provision.

Refer to EUT Photo for further details.

5.1.2 Maximum Peak Conducted Output Power

RESULT: **Pass**

Test Specification

Test standard	:	FCC Part 15.247(b)(3) RSS-247 Section 5.4(d)
Basic standard	:	ANSI C63.10: 2013
Limits	:	1.0 Watts
Kind of test site	:	Shielded Room

Test Setup

Date of testing	:	2023-01-17
Input voltage	:	DC 12V
Operation mode	:	A
Test channel	:	Low / Middle / High
Ambient temperature	:	25.6 ℃
Relative humidity	:	51 %
Atmospheric pressure	:	101 kPa

Table 7: Test Result of Maximum Peak Conducted Output Power

Test Mode	Test Channel (MHz)	Measured Peak Power		Limit (W)
		(dBm)	(W)	
Bluetooth LE (1 Mbps)	2402	-3.20	0.0005	< 1.0
	2440	-3.10	0.0005	
	2480	-3.50	0.0004	
Max. Measured Value		-3.10	0.0005	

Note:
1) The cable loss is taken into account in results.
2) Antenna gain(G): 2.14 dBi

5.1.3 Conducted Power Spectral Density

RESULT: **Pass**

Test Specification

Test standard	:	FCC Part 15.247(e) RSS-247 Section 5.2(b)
Basic standard	:	ANSI C63.10: 2013
Limits	:	< 8 dBm / 3kHz
Kind of test site	:	Shielded Room

Test Setup

Date of testing	:	2023-01-17
Input voltage	:	DC 12V
Operation mode	:	A
Test channel	:	Low / Middle / High
Ambient temperature	:	25.6 ℃
Relative humidity	:	51 %
Atmospheric pressure	:	101 kPa

For the measurement records, refer to the appendix B.

5.1.4 6dB Bandwidth

RESULT: **Pass**

Test Specification

Test standard	:	FCC Part 15.247(a)(2) RSS-247 Section 5.2(a)
Basic standard	:	ANSI C63.10: 2013
Limits	:	> 500 KHz
Kind of test site	:	Shielded Room

Test Setup

Date of testing	:	2023-01-17
Input voltage	:	DC 12V
Operation mode	:	A
Test channel	:	Low / Middle / High
Ambient temperature	:	25.6 ℃
Relative humidity	:	51 %
Atmospheric pressure	:	101 kPa

For the measurement records, refer to the appendix B.

5.1.5 99% Bandwidth

RESULT: **Pass**

Test Specification

Test standard	:	RSS-Gen Clause 6.7
Basic standard	:	ANSI C63.10: 2013
Kind of test site	:	Shielded Room

Test Setup

Date of testing	:	2023-01-17
Input voltage	:	DC 12V
Operation mode	:	A
Test channel	:	Low / Middle / High
Ambient temperature	:	25.6 ℃
Relative humidity	:	51 %
Atmospheric pressure	:	101 kPa

For the measurement records, refer to the appendix B.

5.1.6 Conducted Spurious Emissions Measured in 100 kHz Bandwidth

RESULT: **Pass**

Test Specification

Test standard	:	FCC Part 15.247(d) RSS-247 Section 5.5
Basic standard	:	ANSI C63.10: 2013
Limits	:	20dB (below that in the 100kHz bandwidth within the band that contains the highest level of the desired power); In addition, radiated emissions which fall in the restricted bands, must also comply with the radiated emission limits specified in 15.209(a)
Kind of test site	:	Shielded Room

Test Setup

Date of testing	:	2023-01-17
Input voltage	:	DC 12V
Operation mode	:	A
Test channel	:	Low / Middle / High
Ambient temperature	:	25.6 ℃
Relative humidity	:	51 %
Atmospheric pressure	:	101 kPa

Test results of 100kHz Bandwidth of Frequency Band Edge by Conducted method refer to test plots, and compliance is achieved as well.

For the measurement records, refer to the appendix B.

5.1.7 Radiated Spurious Emission

RESULT: **Pass**

Test Specification

Test standard	:	FCC Part 15.247(d) & FCC Part 15.205 RSS-247 Section 3.3
Basic standard	:	ANSI C63.10: 2013
Limits	:	Refer to 15.209(a) of FCC part 15.247(d) RSS-Gen Section 8.9 & 8.10
Kind of test site	:	3m Semi-anechoic Chamber

Test Setup

Date of testing	:	2023-01-31
Input voltage	:	DC 12V
Operation mode	:	A
Test channel	:	Low / Middle / High
Ambient temperature	:	Refer to test result
Relative humidity	:	Refer to test result
Atmospheric pressure	:	101 kPa

Remark:
Testing was carried out within frequency range 9kHz to the tenth harmonics. Only the worst case spurious emissions configuration of the each mode were reported.

For the measurement records, refer to the appendix B.

5.1.8 Conducted Emission on AC Mains

RESULT: **Not applicable**

Test Specification

Test standard	:	FCC Part 15.207(a) RSS-Gen Section 8.8
Basic standard	:	ANSI C63.10: 2013
Frequency range	:	0.15 – 30MHz
Limits	:	FCC Part 15.207(a) RSS-Gen Table 4
Kind of test site	:	Shielded Room

Exemption Condition(s):

Since the EUT is powered by DC 12.0V,so the test is not applicable and skipped.

6 Photographs of the Test Set-Up

For photographs of the test set-up, refer to the appendix A.

7 List of Tables

Table 1: List of Test and Measurement Equipment 5
Table 2: Technical Specification of EUT 7
Table 3: RF Channel and Frequency of Bluetooth Low Energy 8
Table 4: Test environments 9
Table 5: Test channel and frequency of Bluetooth LE 9
Table 6: Auxiliary Equipment Used during Test 9
Table 7: Test Result of Maximum Peak Conducted Output Power 13