WMic-T2
User Manual

Thank you for choosing Synco WMic-T2. Please read this manual carefully before using the mic and follow all instructions mentioned herein.

Contents

- Main Features.....1
- Notice for Use.....2
- Package List.....3
- Components and Instruction.....4
  - ① Transmitter and Receiver
  - ② Function Button Instruction
  - ③ Indicator Light Instruction
- Installation and Usage.....8
- Specification.....12

120M
120m Working Distance
Dual-Mic Trigger
M
Full Metal Construction
Optional Language
Low Cut Filter
Auto Scanning
Adjustable RF Signal Strength
External Power
Audio Dynamic Display Bar
Transmitter Power Monitor
IR Sync
Mono/Stereo Audio Switch
Real-time Monitor
16 Levels Volume Adjustment
LCD
LCD Screen
96-Channel

Notice for Using Synco WMic-T2 Microphone

1 Transmitter should be more than 20cm from Receiver, when the distance is less than 20cm, Receiver's wireless signal receiving part will take protect action to shut down the receiving of wireless signal, then audio may be intermittent, which is normal;

2 When using auto IR sync, please stay within one meter, otherwise the signal may be too weak and the sync will not be successful;

3 In the case of stereo/mono mode switch, please preset the mode before using to avoid the transient interference caused by switching during usage;

4 The antenna will affect the working distance. Please protect the antenna and avoid any man-made damage;

5 When using this product in a short distance, it is recommended to set RF strength at 'LOW' to reduce the power consumption;

6 For smartphone shooting, customers must separately purchase a TRS-TRRS audio converting cable,and pay attention to set the mobile phone mode to 'Flight Mode' to avoid incoming call interference;

(It does not support the original recording system of some android systems, the third-party APP is recommended to be used in this case);

7 Please keep this product in dry environment;

8 Do not expose the device in rain or humid environment, otherwise there will be a danger of short circuit;

Package List

Portable Box *1

Receiver (RX) *1

Transmitter (TX) *2

3.5mm Mic Audio Input Cable *2

3.5mm–3.5mm Audio Output Cable *1

Cold Shoe Mount *1

Wind Muff *2

3.5mm–XLR Audio Output Cable *1

User Manual *1

Warranty Card *1

Belt Clip *3

Components and Instruction

❶ Components

•Transmitter (TX)

① Antenna
② Matching Status Indicator Light / IR Screen
③ Sound Status Indicator Light
④ Power / Muting Button
⑤ LCD Screen
⑥ Function Selection Button –
⑦ SET Function Menu
⑧ Function Selection Button +
⑨ MIC / LINE IN External Input
⑩ Group Selection Switch
⑪ Battery Tray
⑫ 1/4 Mounting Hole
⑬ Belt Clip

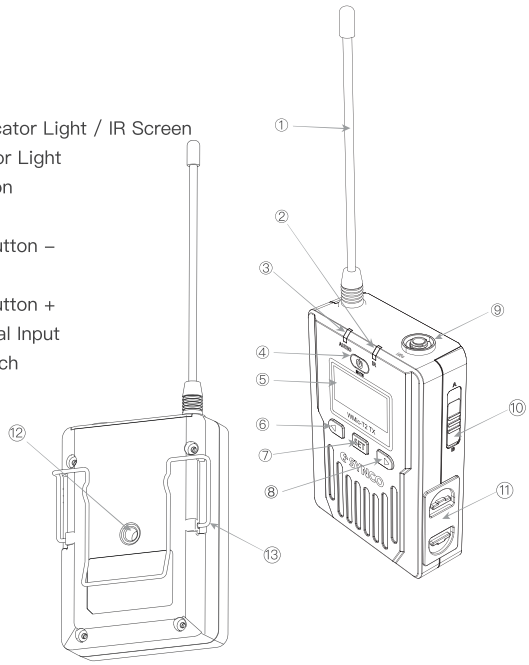

Components and Instruction

- **Receiver (RX)**

① Group A Antenna
② Group B Working Status Indicator Light
③ Group A Working Status Indicator Light
④ Power Switch
⑤ LCD Screen
⑥ Function Selection Button –
⑦ SET Function Menu
⑧ Function Selection Button +
⑨ 3.5mm Audio Output Socket
⑩ 3.5mm Monitoring Socket
⑪ Group B Antenna
⑫ Group Selection Switch
⑬ Battery Tray
⑭ Belt Clip

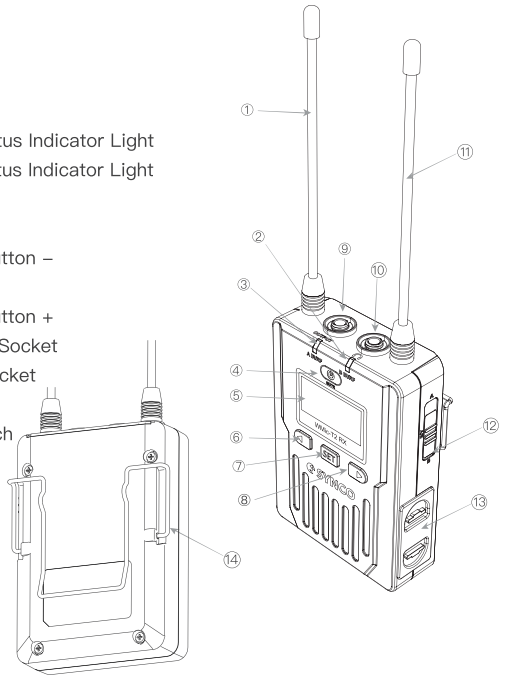

❷ Function Button Instruction

Lavalier Transmitter / Receiver 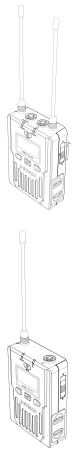	Power / Muting Button	Long Press	Power On / Off
		Short Press	Muting Mode (This function is only for transmitter, when the mute function is turned on and the screen is lighted up)
	SET Function Menu SET	Long Press	Enter the function adjustment menu
		Short Press	1.Confirm the selected function 2.Exit the function adjustment menu
	+ Button ▷	Short Press	Function Adjustment (+)
	– Button ◁	Short Press	Function Adjustment (–)

❸ Indicator Light Instruction

Transmitter	AUDIO	Green Light Keeps on	Normal Recording Status (This state is only for the transmitter, when the channel matches successfully, then the receiver can pick up the sound)
		Red Light Keeps on	Muting Mode
		Red Light Flickers	Low-power reminder
	IR	Green Light Keeps on	Channel matches (No matter the channel matched or not)
		Red Light Flickers	Channel is matching..... (only for IR Sync)
Receiver	A IR/RF B IR/RF	Green Light Keeps on	Normal working status after the channel matched
		Green Light Flickers	Channel match failed
		Red Light Flickers	Channel is matching..... (only for IR Sync)
			Low-power reminder
		Red Light keeps on	Group closed

A IR/RF: Group A Working Status Indicator
B IR/RF: Group B Working Status Indicator

Installation and Usage

Transmitter

1. Install two AA batteries into the battery tray according to the positive and negative electrode

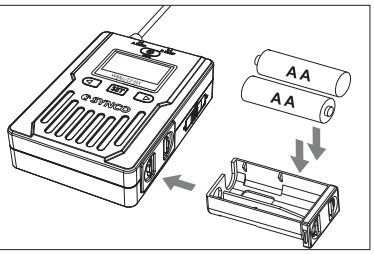

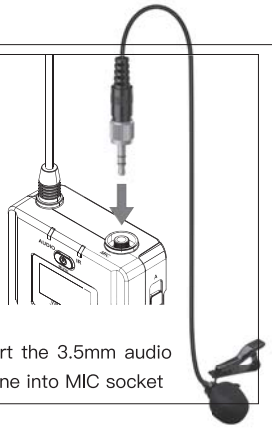

2. Insert the 3.5mm audio input line into MIC socket

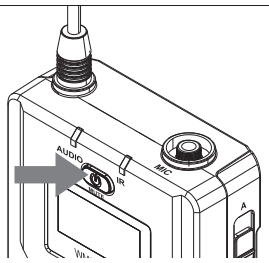

3. Long press the power button to turn on the transmitter

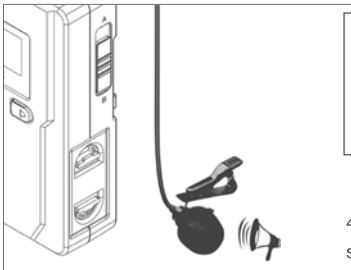

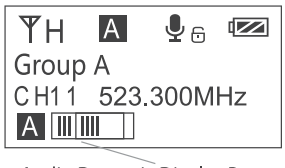

Audio Dynamic Display Bar

4. Target the MIC to the audio source and check the working status according to the volume indicator on the screen

5. Connect the belt clip to the connection hole

6. After the channel matching with the receiver, it can be used.

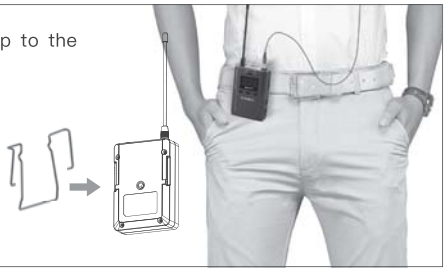

Installation and Usage

Receiver

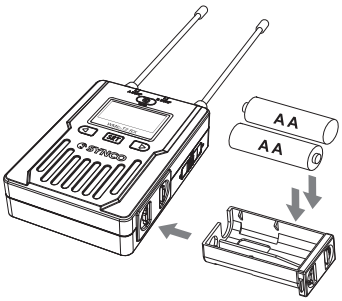

1. Install two AA batteries into the battery tray according to the positive and negative electrode

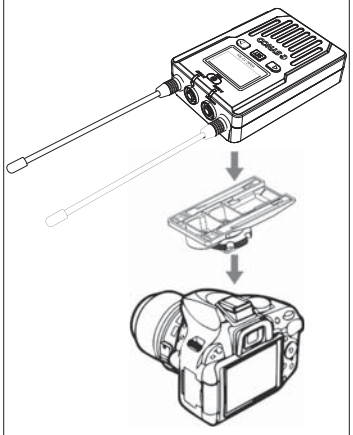

2. Connect the receiver to the video device through the cold-shoe

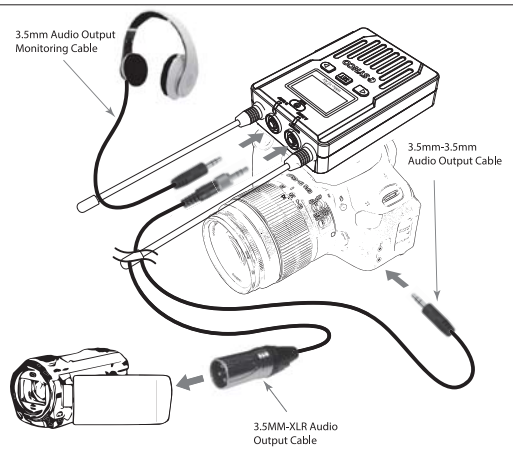

3. Using 3.5mm–3.5mm/3.5mm–XLR audio OUTPUT cable to connect the receiver and camera or camcorder. Insert the headphone into the 3.5mm monitoring port for real–time monitoring and then long press power button to turn on the receiver.

4. After the channel matching with the transmitter, it can be used

Specification

Receiver RX

Signal / Noise	>70dB
Antenna	1/4 Wavelength Wire Antenna
Receive Sensitivity	-95dBm
Stray Radiation	<-60dBc
Sound Delay	<20ms
Audio Distortion	<0.5%
Working Distance	120m
Battery	Two AA Batteries
Working Time	4-6 Hours
Audio Output	3.5mm cable ; XLR cable
Dimension	84 x 63.5 x 23mm
Operating Temperature	0℃ ~ 50℃
Storage Temperature	-20℃ ~ 60℃

Transmitter TX

Signal / Noise	>70dB
Antenna	1/4 Wavelength Wire Antenna
Stray Radiation	<-60dBc
Sound Delay	<20ms
Audio Distortion	<0.5%
Working Distance	120m
Battery	Two AA Batteries
Working Time	4-6 Hours
Dimension	84 x 63.5 x 23mm
Operating Temperature	0℃ ~ 50℃
Storage Temperature	-20℃ ~ 60℃

Transmitter TX

ChannerIs	96
Group A Wireless Frequency	520.000MHz ~ 548.500MHz
Group B Wireless Frequency	550.000MHz ~ 578.500MHz
Transmitting Power	10dBm/15dBm

Receiver RX

ChannerIs	96
Group A Wireless Frequency	520.000MHz ~ 548.500MHz
Group B Wireless Frequency	550.000MHz ~ 578.500MHz

Guangzhou Zhiying Technology Co., Ltd

Block 15th, No.200 Fangcun Avenue East, Liwan District, Guangzhou, China, 510000

support@syncoaudio.com

www.syncoaudio.com

https://www.facebook.com/syncomicrophones

Federal Communications Commission (FCC) Statement

FCC ID: 2AUZR-WMIC-T2

This device complies with part 15 of the FCC Rules. Operation is subject to the following two conditions: (1) This device may not cause harmful interference, and (2) this device must accept any interference received, including interference that may cause undesired operation.

Note: This equipment has been tested and found to comply with the limits for a Class B digital device, pursuant to part 15 of the FCC Rules. These limits are designed to provide reasonable protection against harmful interference in a residential installation. This equipment generates, uses and can radiate radio frequency energy and, if not installed and used in accordance with the instructions, may cause harmful interference to radio communications. However, there is no guarantee that interference will not occur in a particular installation. If this equipment does cause harmful interference to radio or television reception, which can be determined by turning the equipment off and on, the user is encouraged to try to correct the interference by one or more of the following measures:

- Reorient or relocate the receiving antenna.
- Increase the separation between the equipment and receiver.
- Connect the equipment into an outlet on a circuit different from that to which the receiver is connected.
- Consult the dealer or an experienced radio/TV technician for help.

Warning: Changes or modifications made to this device not expressly approved by Guangzhou Zhiying Technology Co., Ltd. may void the FCC authorization to operate this device.

Note: The manufacturer is not responsible for any radio or TV interference caused by unauthorized modifications to this equipment. Such modifications could void the user’s authority to operate the equipment.