CMS505

Card Reader User Guide

Thank you for choosing TOP VME .

Content

1. Product Introduction 1

1-1. Overview 1

1-2. Features 1

2. Product Specifications 2

2-1. General Specifications 2

2-2. Electronic Specifications 2

2-3. Machine Specifications 2

3. Product content 2

4. Product Dimension 3

5. Installation Instructions 4

5-1. Board description 4

5-2. iron plate description 5

6. Application 6

7. Wiring 7

8. Function Description 15

8-1. Setting and Display 15

8-2. Setting 15

8-2-1. GAME 16

8-2-2. Signal 16

8-2-3. System 16

8-3. Function Modes 17

9. Troubleshooting 18

1. Product Introduction

1-1. Overview

The card management system can save labor costs, and reduce auditing stress. All top-ups and cash settlements are completed at the cash register to avoid unnecessary cash handling. This solves the problem of miscalculation and difference between the cash and computer accounts of other branches, and decrease the time cost of checking and reconciling.

Easy to install and use, no need for network cable connection between devices. Information is using and transferring by the memory of the CPU. Without the computer management, each host can work independently.

After using the system management, the accounts are clearer, the handover is simple, it is easy to check and manage at any time, and improve the work efficiency of the playground.

All game cards can be transferred between players, and the venue does not need to be recovered, but can be stored, refunded and deposited.

Applicable to all: game machine, machines with the functions of opening points, returning coins, and issuing lottery tickets.

1-2. Features

- Card Information High security
- Compatible with various game consoles
- Multiple devices can be connected in real time

★ Avaliable type for contact card(ISO 7816) & non-contact card(RFID)

2. Product Specifications

2-1. General Specifications

Communication Interface	RS232/PULSE
Card type	Contact card(ISO 7816)、non-contact card (Mifare1 S70)
Installation site	Indoors

2-2. Electronic Specifications

Input power	+12V DC
Power Consumption	Standby:1.5~1.6W Working:2.3W Max.:2.5W
Temperature Range (° C)	Ambient: 0~60 Storage:-10~80 Humidity:20~70%RH(no condensation)

2-3. Machine Specifications

Weight	229 ±12g
Dimension	133 x 92 x 75 mm
Screen Size	1.8 Inch Screen

3. Product content

Main	CMS 505(non-contact card)
Accessories	Manual*1
	Wires (Check page...)
	Screw set
	CMS100H Adapter board(Optional)
	Metal Frame Sticker (Purchase)
	Metal Frame (Purchase)

4. Product Dimension

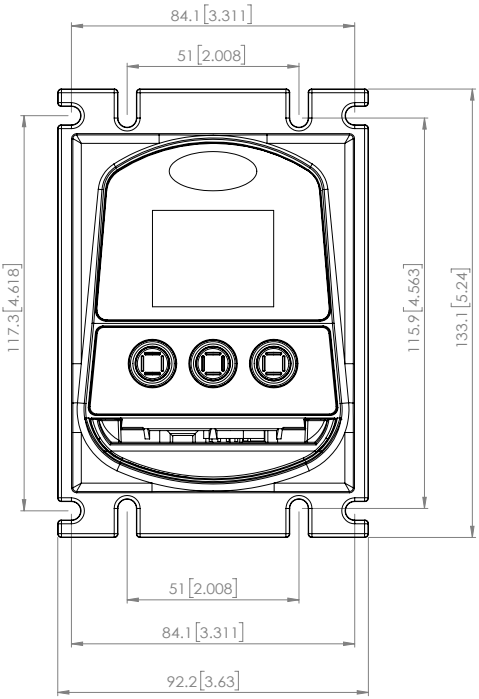

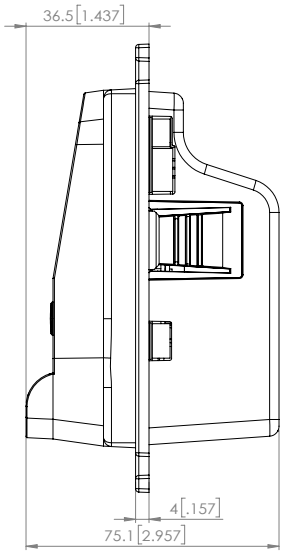

5. Installation Instructions

5-1. Board description

1. Dig holes according to the recommended shape and size.

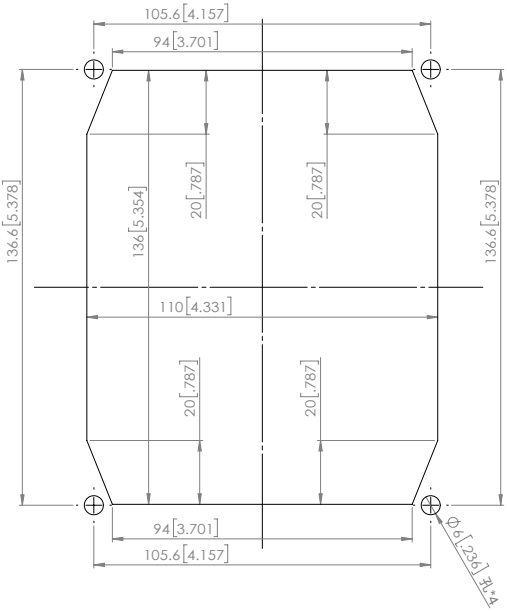

2. Put the CMS505 into the iron frame according to the direction shown in the figure, and lock the nut.

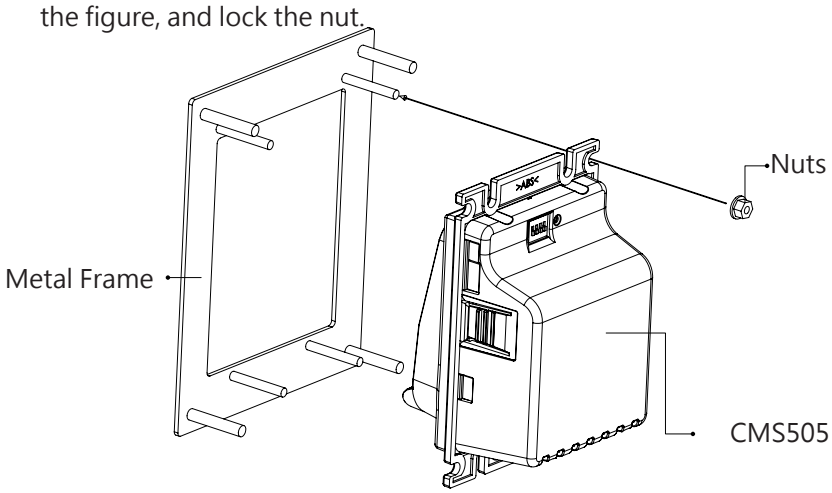

3. Put the CMS505 into the board according to the direction shown in the figure and lock the nut.

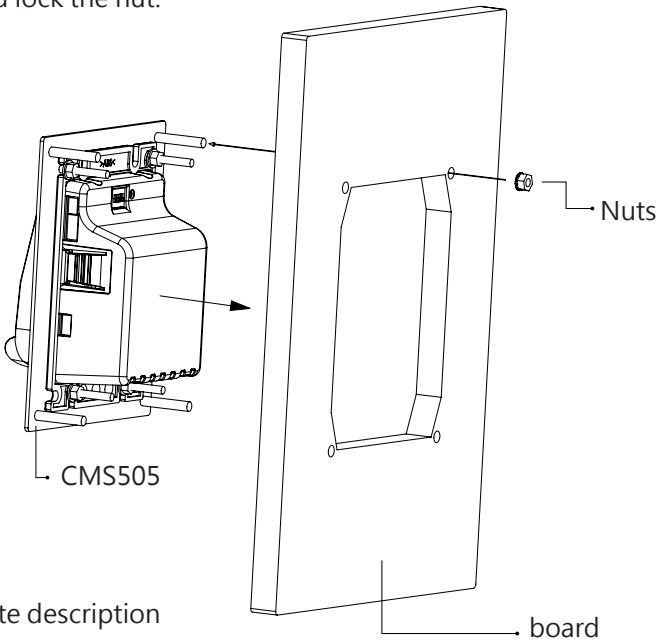

5-2. iron plate description

1. Put the CMS505 into the stud on the iron plate according to the direction shown in the figure, and lock the nut to complete.

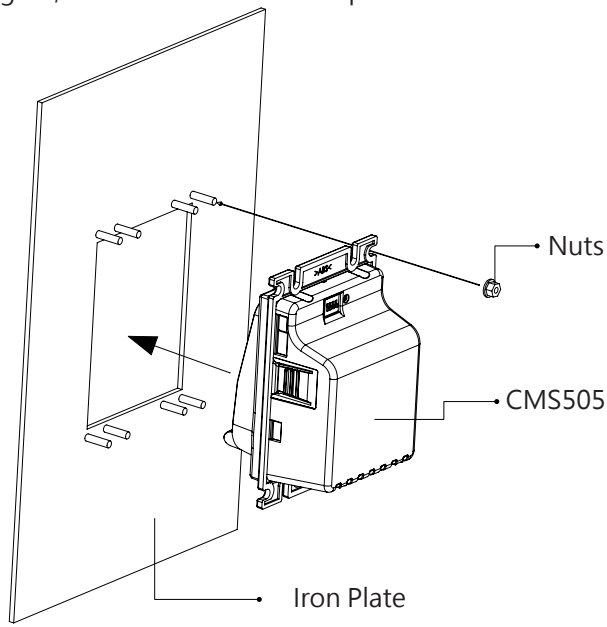

6. Application

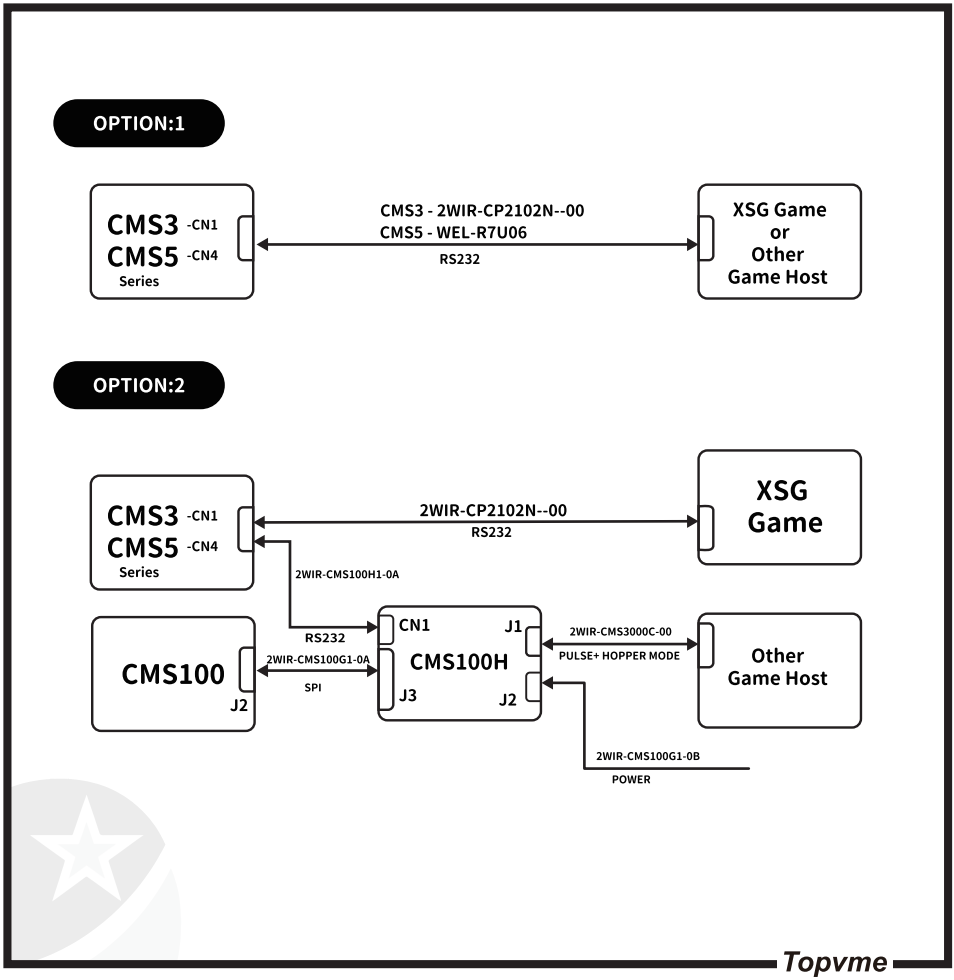

7. Wiring

Connector	Interface	Voltage	Use	Wire	Pag.
J2	Power	+12V DC	Power Cable	WEL-R7U02	8
WEL-R7U02	Power	+12V DC	Power Extension	CU-R961-1	9
CN4	RS232/ UART		Data Transfer	WEL-R7U06 (Purchase)	10
CN4	USB/UART		Data Transfer	2WIR-CP2102N-00 (Purchase)	11
J4	PULSE/ HOPPER		Data Transfer	2WIR-CMS3000C-00 (Purchase)	12
CMS100H	Power	+12V DC	CMS100H Power cord	2WIR-CMS100G1-0B (Purchase)	13
CMS100H	UART/ UART		CMS100H Data transfer	2WIR-CMS100H1-0A (Purchase)	14

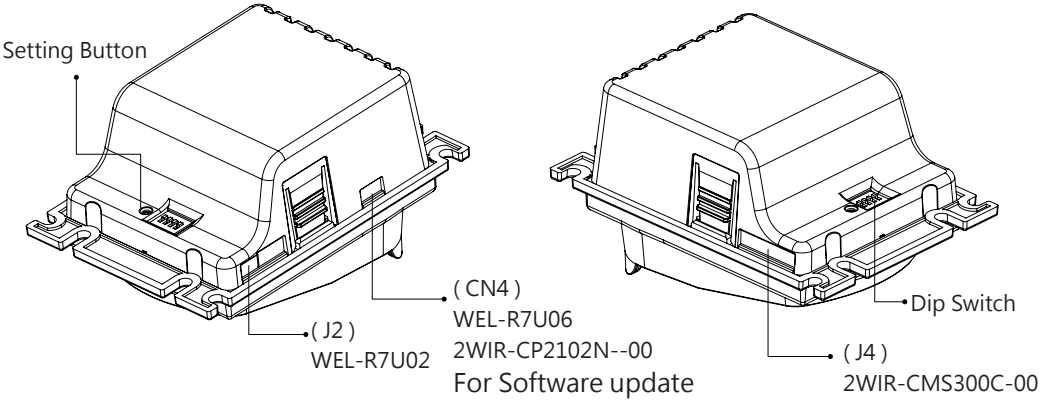

HARNESS FORMAT

WEL-R7U02

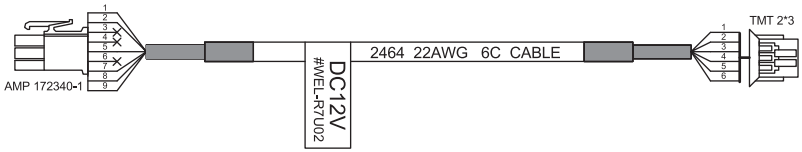

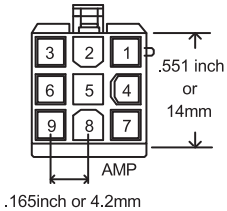

AMP 172340-1 BACK VIEW

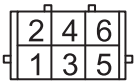

TMT 2*3 BACK VIEW

PIN NO	COLOR	PIN DEFINE
PIN1	YELLOW	NC
PIN2	GREEN	NC
PIN5	RED	+12V DC
PIN7	BLUE	NC
PIN8	PURPLE	NC
PIN9	ORANGE	GND

PIN NO	COLOR	PIN DEFINE
PIN1	RED	+12V DC
PIN2	ORANGE	GND
PIN3	YELLOW	NC
PIN4	GREEN	NC
PIN5	BLUE	NC
PIN6	PURPLE	NC

Topvme

HARNESS FORMAT

CU-R961-1

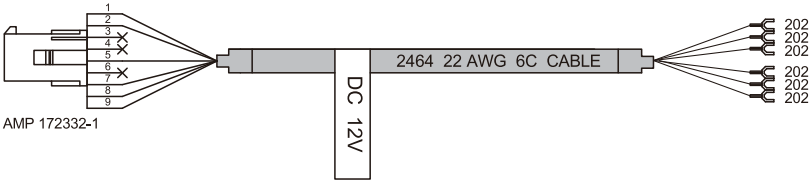

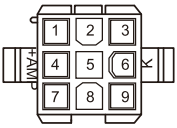

AMP 172332-1
BACK VIEW

PIN NO	COLOR	PIN DEFINE
PIN1	YELLOW	NC
PIN2	GREEN	NC
PIN5	RED	+12V DC
PIN7	BLUE	NC
PIN8	PURPLE	NC
PIN9	ORANGE	GND

Topvme

HARNESS FORMAT

WEL-R7U06

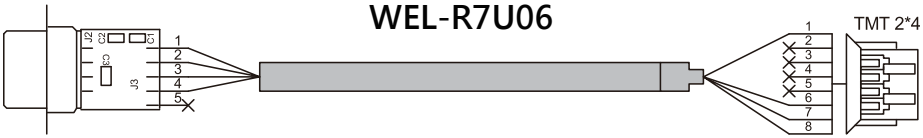

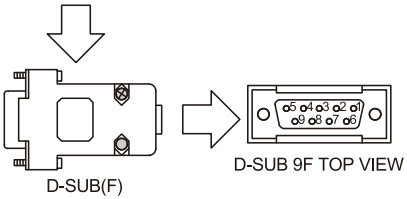

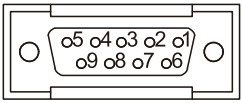

PIN NO	PIN DEFINE
PIN2	TXD
PIN3	RXD
PIN5	GND

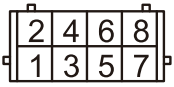

TMT 2*4 BACK VIEW

PIN NO	COLOR	PIN DEFINE
PIN1	BLUE	GND
PIN6	WHITE	VCC
PIN7	BLACK	RXD
PIN8	PURPLE	TXD

Topvme

HARNESS FORMAT

2WIR-CP2102N--00

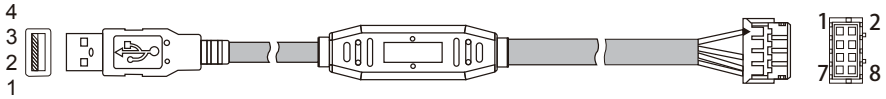

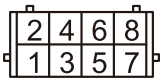

TMT 2*4 BACK VIEW

PIN NO	PIN DEFINE
PIN1	GND
PIN2	USB DP
PIN3	USB DM
PIN4	USB +5V

PIN NO	COLOR	PIN DEFINE
PIN1	BLUE	GND
PIN6	WHITE	NC
PIN7	BLACK	RXD
PIN8	PURPLE	TXD

Topvme

HARNESS FORMAT

2WIR-CMS3000C-00

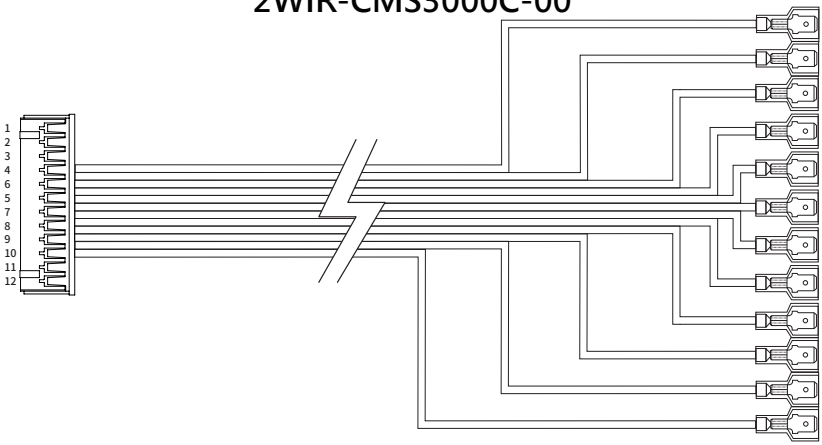

PIN NO	COLOR	PIN DEFINE
PIN1	BLACK	GND
PIN2	BROWN	NOTE
PIN3	GREEN	PAY+
PIN4	ORANGE	TICKET_OUT
PIN5	YELLOW	HOP_N
PIN6	RED	+12V DC

PIN NO	COLOR	PIN DEFINE
PIN7	BLUE	PAY-
PIN8	WHITE	TICKET_IN
PIN9	PURPLE	HOP_OUT
PIN10	GRAY	METER_OUT
PIN11	PINK	INHIBIT_IN
PIN12	WHITE/GREEN	CREDIT_OUT

Topvme

HARNESS FORMAT

2WIR-CMS100G1-0B

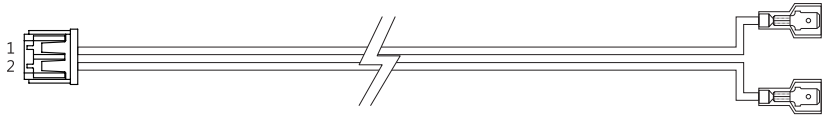

PIN NO	COLOR	PIN DEFINE
PIN1	BLACK	GND
PIN2	RED	+12 DC

Topvme

HARNESS FORMAT

2WIR-CMS100H1-0A

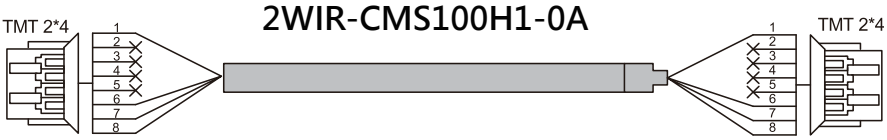

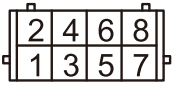

TMT 2*4 BACK VIEW

PIN NO	COLOR	PIN DEFINE
PIN1	YELLOW	GND
PIN7	RED	RXD
PIN8	BLACK	TXD

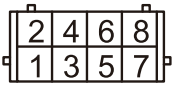

TMT 2*4 BACK VIEW

PIN NO	COLOR	PIN DEFINE
PIN1	YELLOW	GND
PIN7	BLACK	TXD
PIN8	RED	RXD

8. Function Description

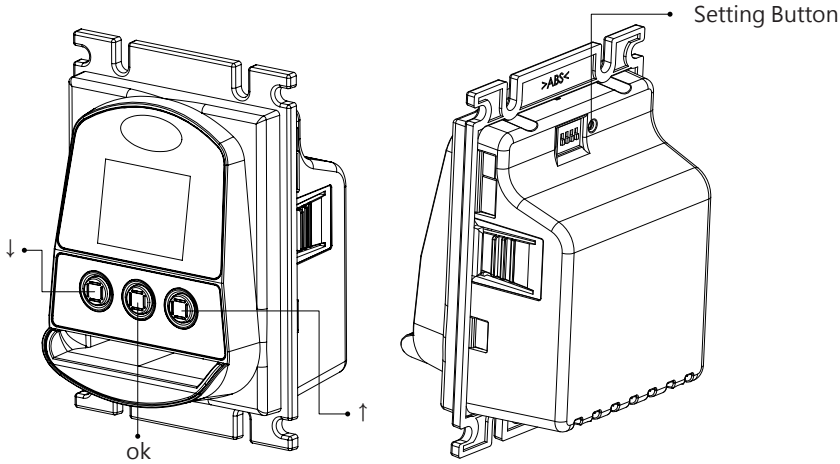

8-1. Setting and Display

1. ok Button : Open points, Set value confirmation, service request(press and hold 3 second)
2. ↓ Button: Scroll down/sub
3. ↑ Button: Scroll up/add
4. Setting Button : Setting mode

8-2. Setting

Press the setting button for 1 seconds to enter the setting menu, then use the buttons · 【↑】、【↓】to select and the · 【OK】button to confirm

8-2-1. GAME

1. Mode : Hopper or Pulse mode
2. Play : Key in
3. Level : Signal level

8-2-2. Signal

Signal time width setting, units in ms

8-2-3. System

1. Card key : Card Key Setting
2. Version : Version Check
3. Channel : RF Channel、dBm Setting

8-3. Function Modes

Mode	Function	Dip Switch			
		1	2	3	4
Mode 1	System: No Connection Mode: RS232 (Without converter board) Card Reader:non-contact card	ON	ON	ON	ON
Mode 2	System: Connected Mode: RS232 (Without converter board) Card Reader:non-contact card、contact card	ON	ON	ON	OFF
Mode 3	System: No Connection Mode: Hopper or Pulse (With converter board) Card Reader:non-contact card	ON	ON	OFF	OFF
Mode 4	System: Connected Mode: Hopper or Pulse (With converter board) Card Reader:non-contact card、contact card	ON	OFF	OFF	OFF
Mode 5	System: Connected Mode: RS232 (Without converter board) Card Reader:non-contact card	ON	OFF	OFF	ON
Mode 6	System: Connected Mode: Hopper or Pulse (With converter board) Card Reader:non-contact card	ON	OFF	ON	OFF
PC Setting Mode	PC Tool Tool Setting	OFF	OFF	OFF	OFF

9. Troubleshooting

Message	Narrative	Preventive action
Card limit	Card used over 100K times	Replace card
Version Err	Firm. Version error	Download the correct firmware
Game no link	Not connected to the game	Check the Game
Mode error	Mode error	Adjust Dip Switch
No link	Host not connected	Check wireless communication
Write Error	Card error	Check card

FCC Warning description

Part 15.19 statement

This device and its accessories comply with Part15 of FCC rules. Operation is subject to the following two conditions:
(1) This device and its accessories may not cause harmful interference.
(2) This device and its accessories must accept any interference received, including interference that may cause undesired operation.

Part 15.21 Statement

The Grantee is not responsible for any changes or modifications not expressly approved by the party responsible for compliance. Such modifications could void the user’ s authority to operate the equipment.

Part 15.105(b) Statement

This equipment has been tested and found to comply with the limits for a Class B digital device, pursuant to part 15 of the FCC Rules. These limits are designed to provide reasonable protection against harmful interference in a residential installation. This equipment generates uses and can radiate radio frequency energy and, if not installed and used in accordance with the instructions, may cause harmful interference to radio communications. However, there is no guarantee that interference will not occur in a particular installation. If this equipment does cause harmful interference to radio or television reception, which can be determined by turning the equipment off and on, the user is encouraged to try to correct the interference by one or more of the following measures:
- Reorient or relocate the receiving antenna.
- Increase the separation between the equipment and receiver.
- Connect the equipment into an outlet on a circuit different from that to which the receiver is connected.
- Consult the dealer or an experienced radio/TV technician for help.

Top Vending Machine Electronics Co., Ltd.
NO.11, Anzhong St., Luzhu Dist., Taoyuan City338, Taiwan, (R.O.C.)
Phone : +886-3-3115969 · Fax : +886-3-3115970
E-mail : sales@topvme.com.tw
Website : www.topvme.com

Top Vending Machine Electronics Co., Ltd.

www.topvme.com