FCC AND ISED CERTIFICATION TEST REPORT

Applicant:	Shenzhen Dangs Science and Technology Co., Ltd.
Address:	1301, Block D1, Chuangzhi Yuncheng, Liuxian Avenue, Nanshan District, Shenzhen, Guangdong Province, China
Manufacturer:	Guangzhou Shikun Electronics Co., Ltd
Address:	No.6 Liankun Road, Huangpu District, Guangzhou, China
Product Description:	Smart Projector
Brand Name:	Dangbei
Tested Model/HVIN:	N2mini
FCC ID:	2AV2J-N2MINI
IC:	27636-N2MINI
Report No.:	JCF250114121-004
Received Date:	Jan. 14, 2025
Tested Date:	Jan. 14, 2025 ~ Feb. 12, 2025
Issued Date:	Feb. 12, 2025
Test Standards:	FCC Rules and Regulations Part 15 Subpart E, RSS-247 Issue 3 August 2023
Test Procedure:	ANSI C63.10:2013, 789033 D02 General U-NII Test Procedures New Rules v02r01, 662911 D01 Multiple Transmitter Output v02r01
Test Result:	Pass

Prepared By:

Roger Li

Roger Li/Engineer **Date:** Feb. 12, 2025

Reviewed By:

Kennys Zhang

Kennys Zhang/Engineer **Date:** Feb. 12, 2025

Approved By:

Talent zhang

Talent Zhang/Engineer **Date:** Feb. 12, 2025

Note: The test results in this report apply exclusively to the tested model / sample. Without written approval of Guangzhou Jingce Testing Technology Co., Ltd. the test report shall not be reproduced except in full.

Report Revise Record

Report Version	Revise Time	Issued Date	Valid Version	Notes
V1.0	/	Feb. 12, 2025	Original Report	/

Table of Contents

1. Test Report Declare **5**
2. Summary of test results **6**
3. Test Laboratory **6**
4. Equipment Under Test **7**
4.1. Description of EUT 7
4.2. Channel List 7
4.3. Test Channel Configuration 8
4.4. Test Environment Conditions 11
4.5. The Worse Case Power Setting Parameter 11
4.6. Description of Available Antennas 13
5. Description of Test Setup **13**
5.1. Accessory 13
5.2. Support Equipment 13
5.3. Test Setup 13
5.4. Setup Diagram for Tests 13
6. Measurement uncertainty **14**
7. Measuring Instrument and Software Used **15**
8. Duty Cycle **17**
8.1. Block Diagram of Test Setup 17
8.2. Limits 17
8.3. Procedure 17
8.4. Results 17
8.5. Original Test Data 19
9. 26dB Bandwidth, 6dB Bandwidth and 99% Bandwidth **47**
9.1. Block Diagram of Test Setup 47
9.2. Limits 47
9.3. Test Procedure 47
9.4. Test Result 47
9.5. Original Test Data 52
10. Maximum Output Power **115**
10.1. Block Diagram of Test Setup 115
10.2. Limits 115
10.3. Test Procedure 115
10.4. Test Result 116
11. Power Spectral Density **118**
11.1. Block Diagram of Test Setup 118
11.2. Limits 118
11.3. Test Procedure 118
11.4. Test Result 119
11.5. Original Test Data 121
12. Frequency Stability Measurement **151**
12.1. Block Diagram of Test Setup 151
12.2. Limit of Frequency Stability 151
12.3. Test Procedures 151
12.4. Test Result 151
13. Radiated Emission **157**
13.1. Block Diagram of Test Setup 157
13.2. Limit 158
13.3. Test Procedure 159
13.4. Test Result 161
13.5. Original Test Data 161
14. AC Power Line Conducted Emissions **167**

14.1. Block Diagram of Test Setup 167
14.2. Limits 167
14.3. Test Procedure 167
14.4. Test Result 168
14.5. Original Test Data 168
15. Dynamic Frequency Selection 169
15.1. Applicability of DFS Requirements 169
15.2. Limit 170
15.3. Parameters of Radar Test Waveform 170
15.4. Calibration of Radar Waveform 171
15.5. Channel Closing Transmission Time, Channel Move Time and Non-Occupancy Period 173
15.6. Test Setup 173
15.7. Test Result 174
16. Antenna Requirements 176
16.1. Applicable Requirements 176
16.2. Result 176
APPENDIX A – Radiated Emission Below 1GHz Test Data 177
APPENDIX B – Radiated Emission Above 1GHz Test Data 179
APPENDIX C – AC Power Line Conducted Emission Test Data 259

1. Test Report Declare

Applicant:	Shenzhen Dangs Science and Technology Co., Ltd.
Address:	1301, Block D1, Chuangzhi Yuncheng, Liuxian Avenue, Nanshan District, Shenzhen, Guangdong Province, China
Manufacturer:	Guangzhou Shikun Electronics Co., Ltd
Address:	No.6 Liankun Road, Huangpu District, Guangzhou, China
Product Name:	Smart Projector
Brand Name:	Dangbei
Model Name:	N2mini
Difference Description:	NA

We Declare:

The equipment described above is tested by Guangzhou Jingce Testing Technology Co., Ltd. and in the configuration tested the equipment complied with the standards specified above. The test results are contained in this test report and Guangzhou Jingce Testing Technology Co., Ltd. is assumed of full responsibility for the accuracy and completeness of these tests except as provided information by clients.

2. Summary of test results

The EUT have been tested according to the applicable standards as referenced below.			
Clause	**Description of Test Item**	**Standard**	**Verdict**
1	6/26dB Bandwidth	FCC 15.407 (a)&(e) RSS-247 Clause 6.2	Pass
2	99% Occupied Bandwidth	RSS-Gen Clause 6.6	Pass
3	Maximum Conducted Output Power	FCC 15.407 (a) RSS-247 Clause 6.2	Pass
4	Power Spectral Density	FCC 15.407 (a) RSS-247 Clause 6.2	Pass
5	Frequency Stability Measurement	FCC 15.407 (g)	Pass
6	Radiated Band edge and Spurious Emission	FCC 15.407 (b) FCC 15.209 FCC 15.205 RSS-247 Clause 6.2 RSS-GEN Clause 8.9	Pass
7	Power Line Conducted Emission	FCC 15.207 RSS-GEN Clause 8.8	Pass
8	Antenna requirement	FCC 15.203 RSS-GEN Clause 8.3	Pass
9	Dynamic Frequency Selection	FCC 15.407 (h) RSS-247 Clause 6.3	Pass

3. Test Laboratory

Guangzhou Jingce Testing Technology Co., Ltd.

Add.: No.10, Hefeng No.1 street, Huangpu District, Guangzhou, Guangdong, People's Republic of China

Association for Laboratory Accreditation(A2LA). Certificate Number: 6594.03

FCC Designation Number: CN1381. Test Firm Registration Number: 486550

IC Test Firm Registration Number: 31808

Conformity Assessment Body identifier: CN0173

4. Equipment Under Test

4.1. Description of EUT

EUT Name:	Smart Projector
Model Number:	N2mini
EUT Function Description:	Please refer to the user manual
Power Supply:	100-240V~ 50/60Hz 2A
Radio Specification:	IEEE 802.11a/n/ac/ax
Operation Frequency:	EEE 802.11a: 5180MHz—5825MHz IEEE 802.11n HT20: 5180MHz—5825MHz IEEE 802.11n HT40: 5190MHz—5795MHz IEEE 802.11ac VHT20: 5180MHz—5825MHz IEEE 802.11ac VHT40: 5190MHz—5795MHz IEEE 802.11ax HE20: 5180MHz—5825MHz IEEE 802.11ax HE40: 5190MHz—5795MHz
Modulation:	IEEE 802.11a: OFDM (64QAM, 16QAM, QPSK, BPSK) IEEE 802.11n HT20, HT40: OFDM (64QAM, 16QAM, QPSK, BPSK) IEEE 802.11ac (VHT20/40): OFDM (256QAM, 64QAM, 16QAM, QPSK, BPSK) IEEE 802.11ax (HE20/40): OFDMA (1024QAM, 256QAM, 64QAM, 16QAM, QPSK, BPSK)
Data Rate:	IEEE 802.11a: 6, 9, 12, 18, 24, 36, 48, 54Mbps IEEE 802.11n HT20: 7.2, 14.2, 21.7, 28.9, 43.3, 57.8, 65, 72.2 Mbps IEEE 802.11n HT40: 15, 30, 45, 60, 90, 120, 135, 150 Mbps IEEE 802.11ac VHT20: 7.2, 14.4, 21.7, 28.9, 43.3, 57.8, 65, 72.2, 86.7 Mbps IEEE 802.11ac VHT40: 15, 30, 45, 60, 90, 120, 135, 150, 180, 200 Mbps IEEE 802.11ax HE20: 8.6, 17.2, 25.8, 34.4, 51.6, 68.8, 77.4, 86, 103.2, 114.7, 129, 143.4Mbps IEEE 802.11ax HE40: 17.2, 34.4, 51.6, 68.8, 103.2, 137.6, 154.9, 172.1, 206.5, 229.4, 258.1, 286.8Mbps
Antenna Type:	FPC Antenna, MAX. Gain: 5.85 dBi

Note 1: EUT is the ab. of equipment under test.

Note 2: The antenna gain is declared by the customer and the laboratory is not responsible for the accuracy of the antenna gain.

4.2. Channel List

UNII-1 (For Bandwidth = 20 MHz)		UNII-1 (For Bandwidth = 40 MHz)	
Channel	Frequency (MHz)	Channel	Frequency (MHz)
36	5180	38	5190
40	5200	46	5230
44	5220	/	/
48	5240	/	/

UNII-1 (For Bandwidth = 80 MHz)	
Channel	Frequency (MHz)
42	5210

UNII-2A (For Bandwidth = 20 MHz)	UNII-2A (For Bandwidth = 40 MHz)

Channel	Frequency (MHz)	Channel	Frequency (MHz)
52	5260	54	5270
56	5280	62	5310
60	5300	/	/
64	5320	/	/

UNII-2C (For Bandwidth = 20 MHz)		UNII-2C (For Bandwidth = 40 MHz)	
Channel	Frequency (MHz)	Channel	Frequency (MHz)
100	5500	102	5510
104	5520	110	5550
108	5540	118	5590
112	5560	126	5630
116	5580	134	5670
120	5600	142	5710
124	5620	/	/
128	5640	/	/
132	5660	/	/
136	5680	/	/
140	5700	/	/
144	5720	/	/

UNII-3 (For Bandwidth = 20 MHz)		UNII-3 (For Bandwidth = 40 MHz)	
Channel	Frequency (MHz)	Channel	Frequency (MHz)
149	5745	151	5755
153	5765	159	5795
157	5785	/	/
161	5805	/	/
165	5825	/	/

4.3. Test Channel Configuration

Mode	Data rate (Mbps) (see Note)	Test Channel and Frequency
802.11a TX Mode	6	CH36, 5180
	6	CH44, 5220
	6	CH48, 5240
	6	CH52, 5260
	6	CH60, 5300
	6	CH64, 5320
	6	CH100, 5500
	6	CH116, 5580

	6	CH140, 5700
	6	CH144, 5720
	6	CH149, 5745
	6	CH157, 5785
	6	CH165, 5825
802.11n HT20 TX Mode	MCS 0	CH36, 5180
	MCS 0	CH44, 5220
	MCS 0	CH48, 5240
	MCS 0	CH52, 5260
	MCS 0	CH60, 5300
	MCS 0	CH64, 5320
	MCS 0	CH100, 5500
	MCS 0	CH116, 5580
	MCS 0	CH140, 5700
	MCS 0	CH144, 5720
	MCS 0	CH149, 5745
	MCS 0	CH157, 5785
	MCS 0	CH165, 5825
802.11n HT40 TX Mode	MCS 0	CH38, 5190
	MCS 0	CH46, 5230
	MCS 0	CH54, 5270
	MCS 0	CH62, 5310
	MCS 0	CH102, 5510
	MCS 0	CH110, 5550
	MCS 0	CH134, 5670
	MCS 0	CH142, 5710
	MCS 0	CH151, 5755
	MCS 0	CH159, 5795
802.11ac VHT20 TX Mode	MCS 0	CH36, 5180
	MCS 0	CH44, 5220
	MCS 0	CH48, 5240
	MCS 0	CH52, 5260
	MCS 0	CH60, 5300
	MCS 0	CH64, 5320
	MCS 0	CH100, 5500
	MCS 0	CH116, 5580
	MCS 0	CH140, 5700
	MCS 0	CH144, 5720
	MCS 0	CH149, 5745
	MCS 0	CH157, 5785
	MCS 0	CH165, 5825

802.11ac VHT40 TX Mode	MCS 0	CH38, 5190
	MCS 0	CH46, 5230
	MCS 0	CH54, 5270
	MCS 0	CH62, 5310
	MCS 0	CH102, 5510
	MCS 0	CH110, 5550
	MCS 0	CH134, 5670
	MCS 0	CH151, 5755
	MCS 0	CH159, 5795
802.11ax HE20 TX Mode	MCS 0	CH36, 5180
	MCS 0	CH44, 5220
	MCS 0	CH48, 5240
	MCS 0	CH52, 5260
	MCS 0	CH60, 5300
	MCS 0	CH64, 5320
	MCS 0	CH100, 5500
	MCS 0	CH116, 5580
	MCS 0	CH140, 5700
	MCS 0	CH144, 5720
	MCS 0	CH149, 5745
	MCS 0	CH157, 5785
	MCS 0	CH165, 5825
802.11ax HE40 TX Mode	MCS 0	CH38, 5190
	MCS 0	CH46, 5230
	MCS 0	CH54, 5270
	MCS 0	CH62, 5310
	MCS 0	CH102, 5510
	MCS 0	CH110, 5550
	MCS 0	CH134, 5670
	MCS 0	CH142, 5710
	MCS 0	CH151, 5755
	MCS 0	CH159, 5795
	MCS 0	CH155, 5775
Note: According exploratory test, EUT will have maximum output power in those data rate, so those data rate were used for all test.		

4.4. Test Environment Conditions

During the measurement the environmental conditions were within the listed ranges:

	Normal Conditions	Extreme Conditions
Temperature range	21-25 ℃	5 ℃ to +35 ℃
Humidity range	40-75%	N/A
Pressure range	86-106 kPa	N/A
Power supply	NV: AC 120V	N/A
Note: The Extreme temperature range and extreme voltages are declared by the manufacturer.		

4.5. The Worse Case Power Setting Parameter

The Worse Case Power Setting Parameter		
Test Software	MobaXterm	
Mode	Channel	Soft set value
		Ant1
802.11a	36	2 0 4 13
	44	2 0 4 13
	48	2 0 4 13
	52	2 0 4 13
	60	2 0 4 13
	64	2 0 4 13
	100	2 0 4 13
	116	2 0 4 13
	140	2 0 4 13
	144	2 0 4 13
	149	2 0 4 13
	157	2 0 4 13
	165	2 0 4 13
802.11n HT20	36	2 1 0 11
	44	2 1 0 11
	48	2 1 0 11
	52	2 1 0 13
	60	2 1 0 13
	64	2 1 0 13
	100	2 1 0 11
	116	2 1 0 11
	140	2 1 0 13
	144	2 1 0 13
	149	2 1 0 13
	157	2 1 0 13
	165	2 1 0 13
802.11n HT40	38	2 1 0 12
	46	2 1 0 12

	54	2 1 0 13
	62	2 1 0 13
	102	2 1 0 12
	110	2 1 0 12
	134	2 1 0 12
	142	2 1 0 12
	151	2 1 0 12
	159	2 1 0 12
802.11ac VHT20	36	2 1 0 11
	44	2 1 0 11
	48	2 1 0 11
	52	2 1 0 13
	60	2 1 0 13
	64	2 1 0 13
	100	2 1 0 11
	116	2 1 0 11
	140	2 1 0 11
	144	2 1 0 11
	149	2 1 0 11
	157	2 1 0 11
	165	2 1 0 11
802.11ac VHT40	38	2 1 0 11
	46	2 1 0 11
	54	2 1 0 13
	62	2 1 0 13
	102	2 1 0 11
	110	2 1 0 11
	134	2 1 0 11
	142	2 1 0 11
	151	2 1 0 11
	159	2 1 0 11
802.11ax HE20	36	2 2 0 12
	44	2 2 0 12
	48	2 2 0 12
	52	2 2 0 12
	60	2 2 0 12
	64	2 2 0 12
	100	2 2 0 12
	116	2 2 0 12
	140	2 2 0 12
	144	2 2 0 12

	149	2 2 0 12
	157	2 2 0 12
	165	2 2 0 12
802.11ax HE40	38	2 2 0 12
	46	2 2 0 12
	54	2 2 0 12
	62	2 2 0 12
	102	2 2 0 12
	110	2 2 0 12
	134	2 2 0 12
	142	2 2 0 12
	151	2 2 0 12
	159	2 2 0 12

4.6. Description of Available Antennas

Test Mode	Transmit and Receive Mode	Description
802.11a	☒ 1TX, 1RX	Antenna 1 can be used as transmitting/receiving antenna.
802.11n HT20	☒ 1TX, 1RX	Antenna 1 can be used as transmitting/receiving antenna.
802.11n HT40	☒ 1TX, 1RX	Antenna 1 can be used as transmitting/receiving antenna.
802.11ac VHT20	☒ 1TX, 1RX	Antenna 1 can be used as transmitting/receiving antenna.
802.11ac VHT40	☒ 1TX, 1RX	Antenna 1 can be used as transmitting/receiving antenna.
802.11ax HE20	☒ 1TX, 1RX	Antenna 1 can be used as transmitting/receiving antenna.
802.11ax HE40	☒ 1TX, 1RX	Antenna 1 can be used as transmitting/receiving antenna.

5. Description of Test Setup

5.1. Accessory

Description of Accessories	Manufacturer	Model Number	Description	Remark
/	/	/	/	/

5.2. Support Equipment

Equipment	Brand Name	Model Name	P/N
PC	Lenovo	T480	/

5.3. Test Setup

The EUT can work in Fixed Frequency mode.

5.4. Setup Diagram for Tests

6. Measurement uncertainty

Test Item	Uncertainty
AC Power Conduction emission	1.37 dB
All Radiated emissions	5.4dB
Conducted emissions	3.09 dB
Occupied Channel Bandwidth	1.1%
Conducted Output power	0.82dB
Power Spectral Density	0.82dB
Note: This uncertainty represents an expanded uncertainty expressed at approximately the 95 % confidence level using a coverage factor of k = 2.	

7. Measuring Instrument and Software Used

TS Test System						
Used	Equipment	Manufacturer	Model No.	Serial No.	Last Cal.	Due. Date
☑	Spectrum Analyzer	Keysight	N9030B	MY56320512	Aug. 22, 2024	Aug. 21, 2025
☑	Vector Signal Generator	Keysight	N5182B	MY57300334	Aug. 22, 2024	Aug. 21, 2025
☑	Signal Generator	Keysight	N5171B	MY57280639	Aug. 22, 2024	Aug. 21, 2025
☑	DC POWER	Keysight	E342A	MY59020356	Aug. 29, 2024	Aug. 28, 2025
☑	Incubator thermometer	GWS	EL-02JA	21107288	Aug. 15, 2024	Aug. 14, 2025
☑	Control unit(Power sensor)	Tonscend	JS0806-2	/	Aug. 23, 2024	Aug. 22, 2025
☑	Spectrum Analyzer	Keysight	N9020B	MY60112206	Sep. 11, 2024	Sep. 10, 2025
☑	Control unit(Power sensor)	Tonscend	JS0806-2	21H8060465	Aug. 22, 2024	Aug. 21, 2025
☑	Spectrum Analyzer	Keysight	N9020B	MY60112811	Aug. 23, 2024	Aug. 22, 2025
☑	Signal Generator	Keysight	N5173B	MY62220145	Aug. 23, 2024	Aug. 22, 2025
☑	Vector Signal Generator	Keysight	N5182B	MY61252859	Aug. 22, 2024	Aug. 21, 2025
☑	DC POWER	Keysight	E3642A	MY40005294	Aug. 30, 2024	Aug. 29, 2025
☑	Control unit(Power sensor)	Tonscend	JS0806-2	24F80620865	Aug. 23, 2024	Aug. 22, 2025

Software				
Used	Description	Manufacturer	Name	Version
☑	Test software	Tonscend	JS1120-3	V3.3.10

RSE Test System						
Used	Equipment	Manufacturer	Model No.	Serial No.	Last Cal.	Due. Date
☑	EMI Receiver	R&S	ESR26	101424	Sep. 14, 2024	Sep. 13, 2025
☑	Hybrid Antenna	Schwarzbeck	VULB9163	01416	May. 22, 2024	May. 21, 2025
☑	Horn Antenna 1	Schwarzbeck	BBHA 9120 D	02910	Sep. 11, 2024	Sep. 10, 2025
☑	Horn Antenna 2	ETS	BBHA 9170	1090	Sep. 11, 2024	Sep. 10, 2025
☑	loop-antenna	Schwarzbeck	FMZB 1513-60	00030	Jan. 12, 2025	Jan. 11, 2026
☑	Test path	/	Path3: WIFI-5.1G 1-6.5GHz	/	Aug. 23, 2024	Aug. 22, 2025
☑	Test path	/	Path4: WIFI-5.4G 1-6.5GHz	/	Aug. 23, 2024	Aug. 22, 2025
☑	Test path	/	Path5: WIFI-5.8G 1-6.5GHz	/	Aug. 23, 2024	Aug. 22, 2025
☑	Test path	/	Path7: ALL PASS 1-18GHz	/	Aug. 23, 2024	Aug. 22, 2025
☑	Test path	/	Path10:	/	Aug. 23, 2024	Aug. 22, 2025

			6.5GHz High PASS 6.5-18GHz			
☑	Test path	/	Path16: 30MHz-1GHz ALL PASS NO AMP	/	Aug. 23, 2024	Aug. 22, 2025
☑	Signal Pre-Amplifier	ETS	3116C-PA	00217677	Sep. 06, 2024	Sep. 05, 2025
☑	3m Fully-anechoic Chamber	YIHENG	9m*6m*6m	001	Sep. 05, 2023	Sep. 04, 2026
Software						
Used	Description	Manufacturer	Name		Version	
☑	Test software	Tonscend	TS+		V5.0.0.0	
Conducted Emission Test For AC Power Port						
Used	Equipment	Manufacturer	Model No.	Serial No.	Last Cal.	Due. Date
☑	LISN	R&S	ENV216	102509	Aug. 22, 2024	Aug. 21, 2025
☑	EMI Receiver	R&S	ESR	102154	Aug. 22, 2024	Aug. 21, 2025
Software						
Used	Description	Manufacturer	Name		Version	
☑	Test software	EZ	EZ-EMC		EMEC-3A1	
Other Instrument						
Used	Equipment	Manufacturer	Model No.	Serial No.	Last Cal.	Due. Date
☑	Temperature & Humidity	Temperature	HTC-1	/	Sep. 04, 2024	Sep. 03, 2025

8. Duty Cycle

8.1. Block Diagram of Test Setup

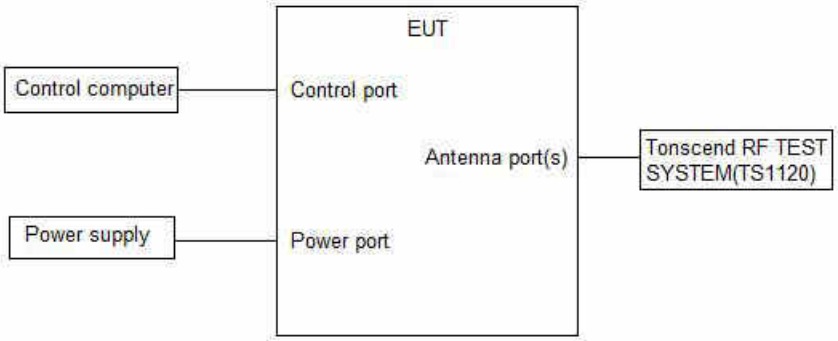

8.2. Limits

None; for reporting purposes only.

8.3. Procedure

Refer to KDB 789033 D02 General U-NII Test Procedures New Rules v02r01 section II.B.

The zero-span mode on a spectrum analyzer or EMI receiver, if the response time and spacing between bins on the sweep are sufficient to permit accurate measurements of the on and off times of the transmitted signal.

Set the center frequency of the instrument to the center frequency of the transmission.

Set RBW ⩾ EBW if possible; otherwise,

set RBW to the largest available value. Set VBW ⩾ RBW.

Set detector = peak or average. The zero-span measurement method shall not be used unless both RBW and VBW are > 50/T, where T is defined in II.B.1.a), and the number of sweep points across duration T exceeds 100. (For example, if VBW and/or RBW are limited to 3 MHz, then the zero-span method of measuring duty cycle shall not be used if T ⩽ 16.7 microseconds.)

8.4. Results

Test Mode	Ant.	Freq. (MHz)	Transmission Duration (ms)	Transmission Period (ms)	Duty Cycle (%)
11A	Ant1	5180	2.04	12.05	16.93
		5200	2.03	2.55	79.61
		5240	2.03	2.55	79.61
		5260	2.03	2.55	79.61
		5280	2.03	2.55	79.61
		5320	2.03	2.55	79.61
		5500	2.03	2.55	79.61
		5580	2.03	2.55	79.61
		5700	2.03	2.55	79.61
		5720	2.03	2.55	79.61
		5745	2.03	2.55	79.61
		5785	2.04	2.56	79.69
		5825	2.03	2.55	79.61
11N20SISO	Ant1	5180	1.89	2.41	78.42
		5200	1.89	2.41	78.42
		5240	1.90	2.42	78.51
		5260	1.89	2.41	78.42
		5280	1.89	2.42	78.10
		5320	1.89	2.42	78.10
		5500	1.89	2.40	78.75
		5580	1.89	2.41	78.42
		5700	1.89	2.40	78.75
		5720	1.89	2.41	78.42

		5745	1.89	2.41	78.42
		5785	1.89	2.74	68.98
		5825	1.89	2.41	78.42
11N40SISO	Ant1	5190	0.93	1.45	64.14
		5230	0.93	1.45	64.14
		5270	0.94	1.45	64.83
		5310	0.93	1.46	63.70
		5510	0.93	1.45	64.14
		5550	0.93	1.45	64.14
		5670	0.93	1.45	64.14
		5710	0.93	1.45	64.14
		5755	0.93	1.45	64.14
		5795	0.94	1.45	64.83
11AC20SISO	Ant1	5180	1.89	2.42	78.10
		5200	1.89	2.42	78.10
		5240	1.89	2.41	78.42
		5260	1.90	2.42	78.51
		5280	1.90	2.42	78.51
		5320	1.90	2.59	73.36
		5500	1.90	2.42	78.51
		5580	1.90	2.42	78.51
		5700	1.89	2.41	78.42
		5720	1.90	2.42	78.51
		5745	1.91	2.42	78.93
		5785	1.90	2.42	78.51
		5825	1.90	2.42	78.51
11AC40SISO	Ant1	5190	0.94	1.46	64.38
		5230	0.93	1.45	64.14
		5270	0.94	1.49	63.09
		5310	0.94	1.46	64.38
		5510	0.93	1.45	64.14
		5550	0.93	1.45	64.14
		5670	0.93	1.45	64.14
		5710	0.93	1.45	64.14
		5755	0.94	1.45	64.83
		5795	0.94	1.45	64.83
11AX20SISO	Ant1	5180	1.46	1.98	73.74
		5200	1.46	1.98	73.74
		5240	1.46	2.61	55.94
		5260	1.46	2.58	56.59
		5280	1.47	2.63	55.89
		5320	1.46	1.98	73.74
		5500	1.46	1.98	73.74
		5580	1.46	1.98	73.74
		5700	1.47	1.99	73.87
		5720	1.45	1.97	73.60
		5745	1.47	1.99	73.87
		5785	1.46	1.98	73.74
		5825	1.46	1.98	73.74
11AX40SISO	Ant1	5190	0.76	1.28	59.38
		5230	0.76	1.28	59.38
		5270	0.76	1.28	59.38
		5310	0.76	1.28	59.38
		5510	0.77	1.28	60.16
		5550	0.76	1.28	59.38
		5670	0.76	1.28	59.38
		5710	0.77	1.28	60.16

		5755	0.76	1.28	59.38
		5795	0.76	1.27	59.84

8.5. Original Test Data

11A_Ant1_5180

11A_Ant1_5200

11A_Ant1_5240

11A_Ant1_5260

11A_Ant1_5280

11A_Ant1_5320

11A_Ant1_5500

11A_Ant1_5580

11A_Ant1_5700

11A_Ant1_5720

11A_Ant1_5745

11A_Ant1_5785

11A_Ant1_5825

11N20SISO_Ant1_5180

11N20SISO_Ant1_5200

11N20SISO_Ant1_5240

11N20SISO_Ant1_5260

11N20SISO_Ant1_5280

11N20SISO_Ant1_5320

11N20SISO_Ant1_5500

11N20SISO_Ant1_5580

11N20SISO_Ant1_5700

11N20SISO_Ant1_5720

11N20SISO_Ant1_5745

11N20SISO_Ant1_5785

11N20SISO_Ant1_5825

11N40SISO_Ant1_5190

11N40SISO_Ant1_5230

11N40SISO_Ant1_5270

11N40SISO_Ant1_5310

11N40SISO_Ant1_5510

11N40SISO_Ant1_5550

11N40SISO_Ant1_5670

11N40SISO_Ant1_5710

11N40SISO_Ant1_5755

11N40SISO_Ant1_5795

11AC20SISO_Ant1_5180

11AC20SISO_Ant1_5200

11AC20SISO_Ant1_5240

11AC20SISO_Ant1_5260

11AC20SISO_Ant1_5280

11AC20SISO_Ant1_5320

11AC20SISO_Ant1_5500

11AC20SISO_Ant1_5580

11AC20SISO_Ant1_5700

11AC20SISO_Ant1_5720

11AC20SISO_Ant1_5745

11AC20SISO_Ant1_5785

11AC20SISO_Ant1_5825

11AC40SISO_Ant1_5190

11AC40SISO_Ant1_5230

11AC40SISO_Ant1_5270

11AC40SISO_Ant1_5310

11AC40SISO_Ant1_5510

11AC40SISO_Ant1_5550

11AC40SISO_Ant1_5670

11AC40SISO_Ant1_5710

11AC40SISO_Ant1_5755

11AC40SISO_Ant1_5795

11AX20SISO_Ant1_5180

11AX20SISO_Ant1_5200

11AX20SISO_Ant1_5240

11AX20SISO_Ant1_5260

11AX20SISO_Ant1_5280

11AX20SISO_Ant1_5320

11AX20SISO_Ant1_5500

11AX20SISO_Ant1_5580

11AX20SISO_Ant1_5700

11AX20SISO_Ant1_5720

11AX20SISO_Ant1_5745

11AX20SISO_Ant1_5785

11AX20SISO_Ant1_5825

11AX40SISO_Ant1_5190

11AX40SISO_Ant1_5230

11AX40SISO_Ant1_5270

11AX40SISO_Ant1_5310

11AX40SISO_Ant1_5510

11AX40SISO_Ant1_5550

11AX40SISO_Ant1_5670

11AX40SISO_Ant1_5710

11AX40SISO_Ant1_5755