Smart Robot Vacuum Cleaner T1
User Manual

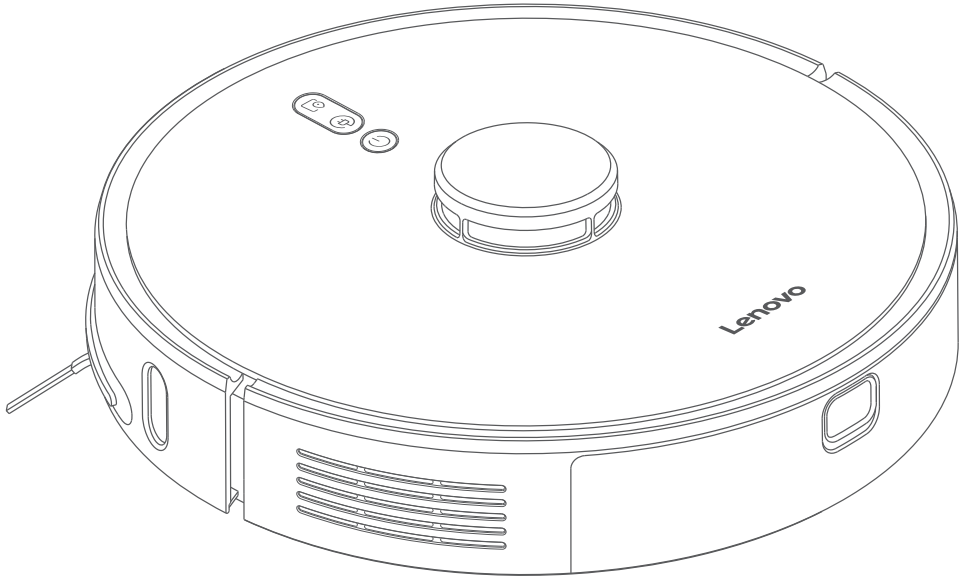

Please read the User Manual before using---Warranty card included, pictures are for reference only.

Lenovo

Safety information

Service restriction

- This product is intended for floor cleaning use only in the home environment. Do not use it outdoors (such as open balcony), non-ground surface (such as sofas), commercial or industrial environments.
- Do not use in a suspended environment (such as a duplex flat, open balcony, top of home) without a protective fence.
- Do not use in the environment where the temperature is above 40°C or below 0°C, or there is any liquid or viscous substance.
- Hang the cable on the ground in your home before use, in order to avoid dragging when the robot is running.
- Put away the fragile items and sundries (such as vases, plastic bags, etc.) on the ground to avoid the robot being blocked or damage to the valuables in the home caused by slight collision during running.
- Do not let the people with disordered physical, mental or cognitive abilities, including children, to use or operate the product.
- Do not allow children to use the robot as a toy. Keep the children and pets as far as possible while the robot is working.
- Do not put the cleaning tool of the main brush in the area which is accessible to children.
- Keep the human body, pet's hair, fingers, etc. away from the suction inlet of the machine when the robot is running.
- Do not use it to clean any burning objects (such as un-extinguished cigarettes).
- Do not use it for suction of hard or sharp objects (such as decoration waste, glass, steel nails, etc.).
- Do not move the robot by holding the cover of laser distance sensor, the cover of the machine or the impact bumper as the handle.
- Do shut down or power off before cleaning or maintaining the machine and the charging base.
- Do not wipe any part of the product with a wet cloth or liquid.
- Do not use the mopping module in an environment with carpet.
- Please use the product in accordance with the instructions in the manual. Any loss or damage caused by improper use is the user's own responsibility.
- It is forbidden to incinerate the product even if it has been severely damaged, for the battery inside may cause an explosion.
- This appliance is not intended for use by persons (including children) with reduced physical sensory or mental capabilities, or lack of experience and knowledge, unless they have been given supervision or instruction concerning use of the appliance by a person responsible for their safety.
- Children should be supervised to ensuere that they do not play with the appliance.

Battery and charging

- Do not use any third-party batteries, chargers, and charging bases.
- Do not disassemble, repair or modify the battery or the charging base.
- Do not place the charging base near a heat source (such as a radiator).
- Do not wipe or clean the clip on the charging base with a wet cloth or wet hands.
- Do not discard inactive batteries at will, but hand them to professional recycling facilities for handling.
- If the power wire is broken or snapped, stop using it immediately and contact customer service in time.
- If you need to transport the product, make sure the machine is turned off, and packing it with the original package is recommended.

Packing list and introduction

Main machine x1

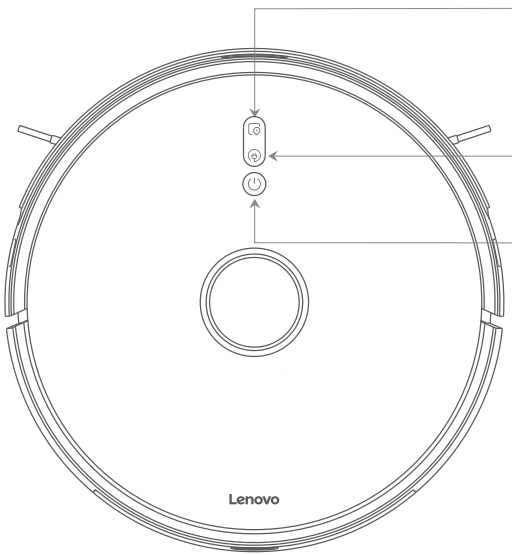

Partial cleaning button

- Short press to activate partial cleaning.

Charging button

- Short press to activate the charging function.

Cleaning/Power button

- Short press to activate the cleaning function.
- Long press to power on or off.

Reset WiFi

- Press and hold the Partial cleaning button and the Charging button for more than 3 seconds at the same time.

  Note: Press any button to pause during cleaning/charging or partial cleaning.

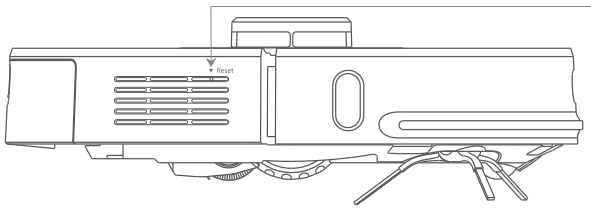

Forced Power-off button

- Short press to power off.

Packaging list and introduction

Main machine

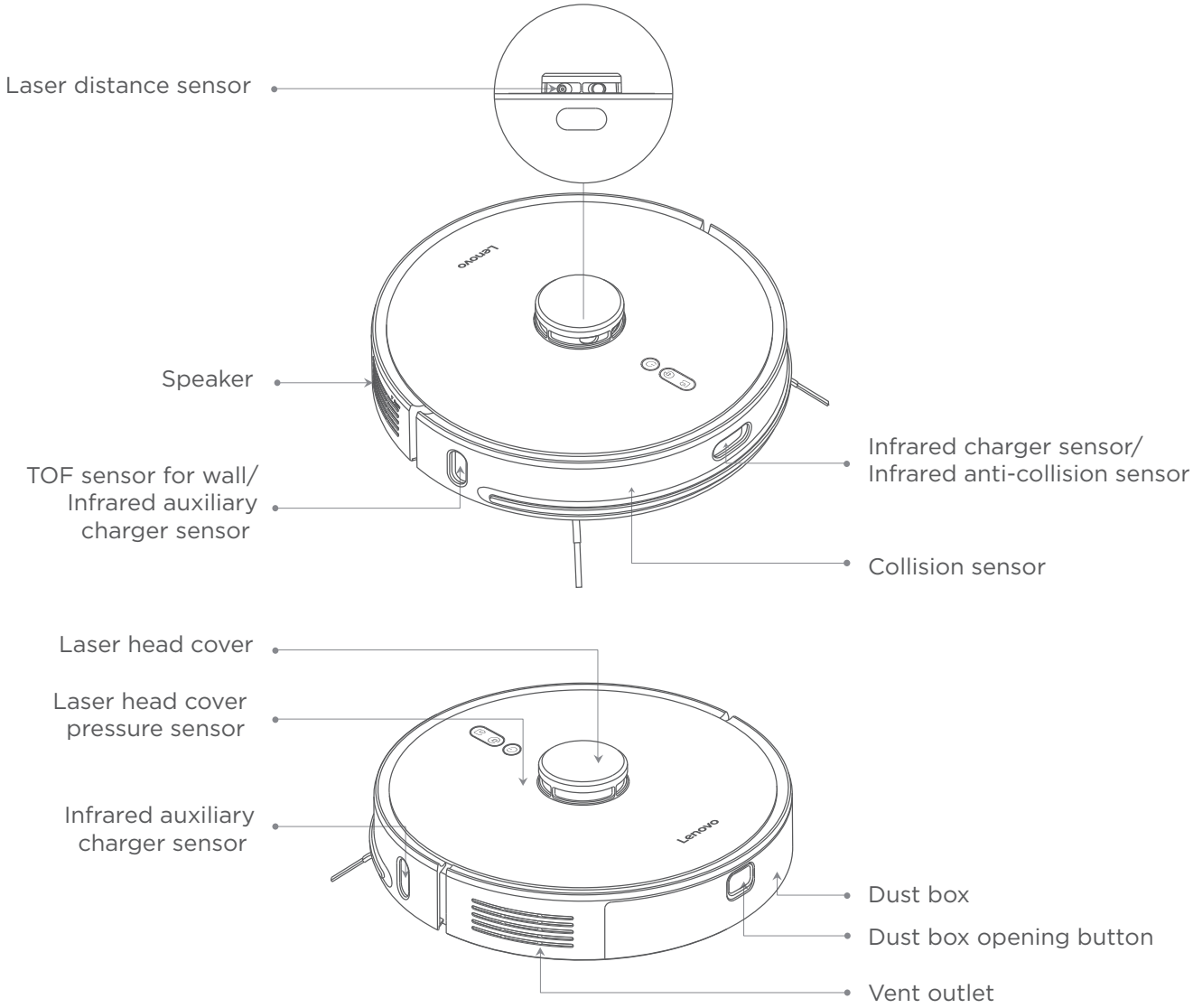

Packaging list and introduction

Main machine

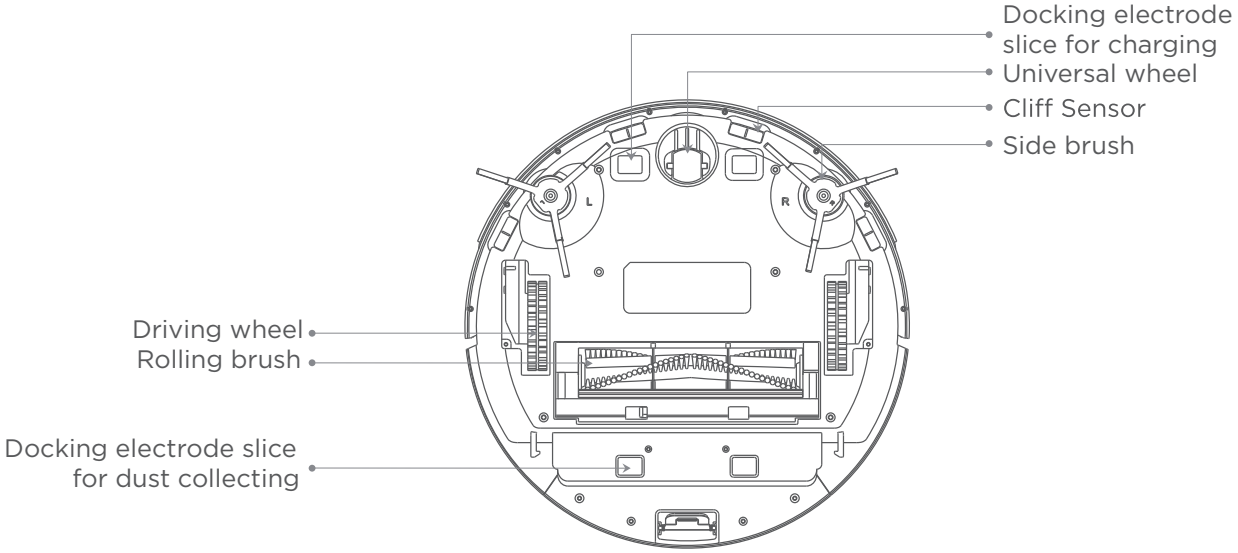

Accessories list for Smart Robot Vacuum Cleaner

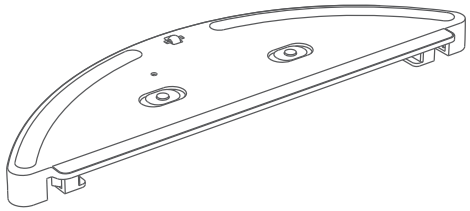

Water tank x1

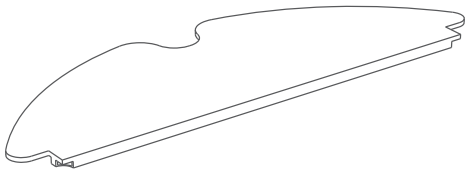

Mop x1

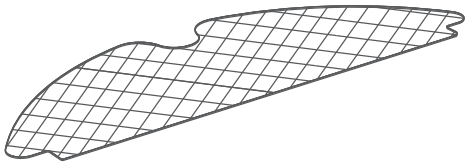

Disposable mop x10

Packaging list and introduction

Dust box module x1

Find and install the filter screen before using

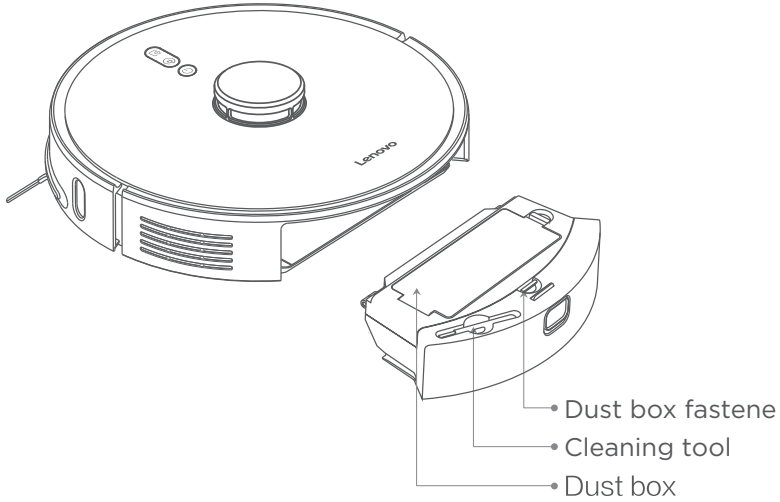

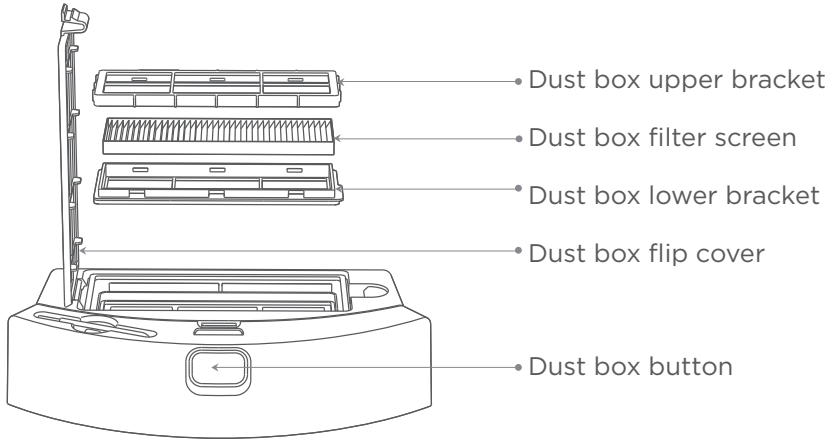

Mopping module x1

Find and install the water tank and mop (or disposable mop) before using

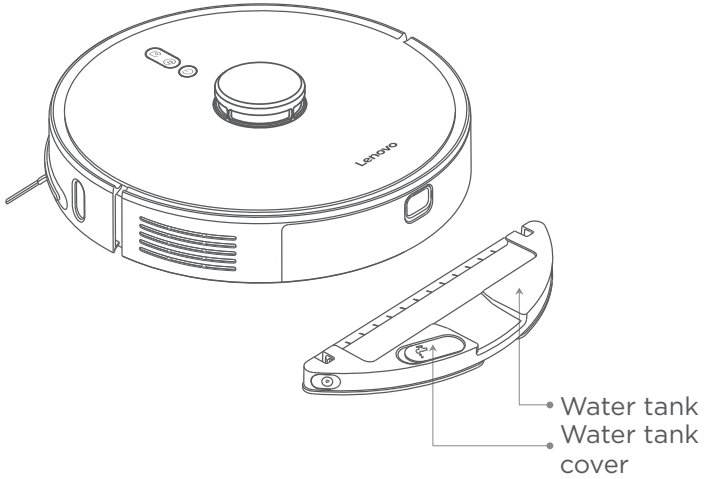

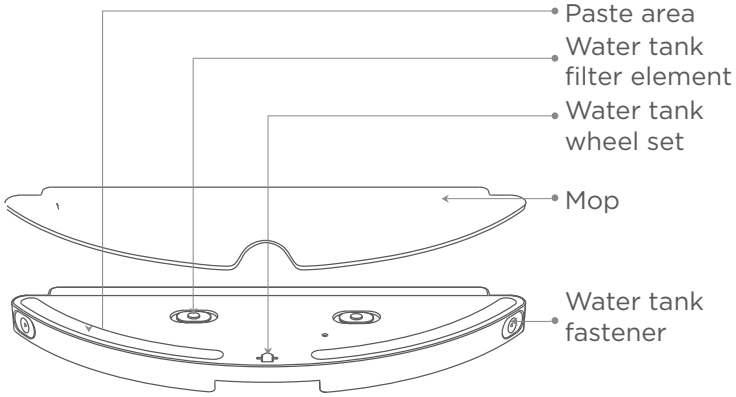

Packaging list and introduction

List of optional accessories (Users can choose one of the two sets according to actual demands----Charging base + Charging base adapter or Dust collector + Dust collector charging wire.)

1.Charging base

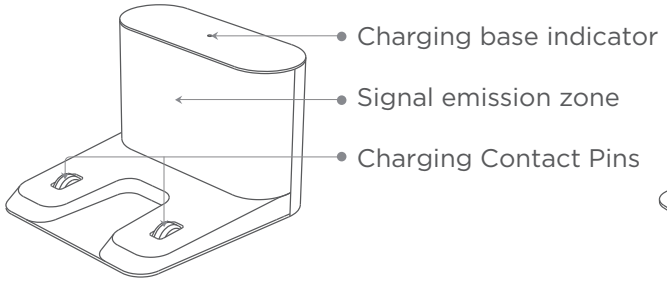

Front side of charging base

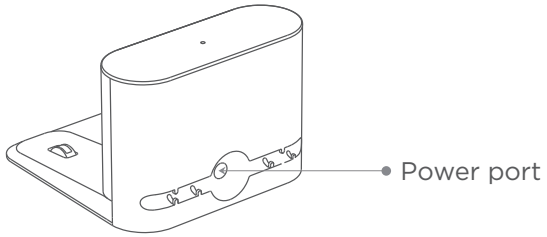

Back side of charging base

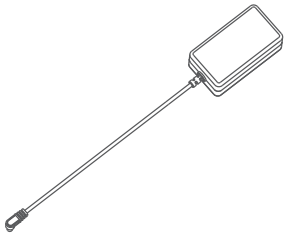

Charging base adapter

2.Dust collector (Two-in-one for dust collection and charging)

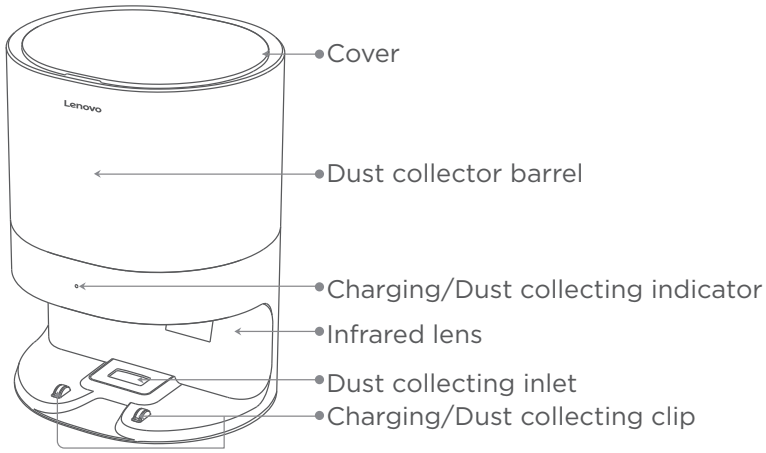

Front side of dust collector

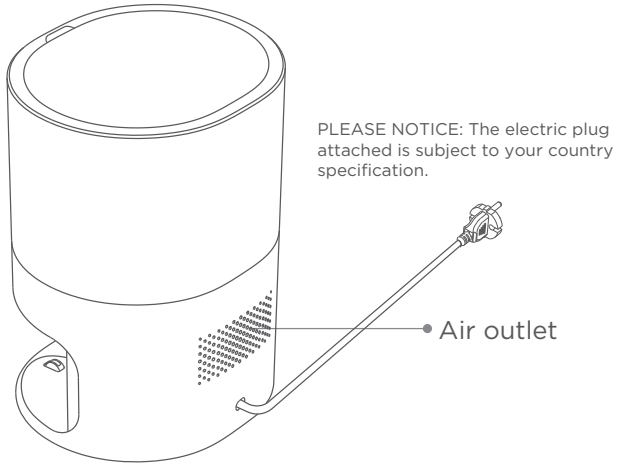

Back side of dust collector

Installation

1.Install the charging base

1. Place the charging base on a flat surface against the wall.

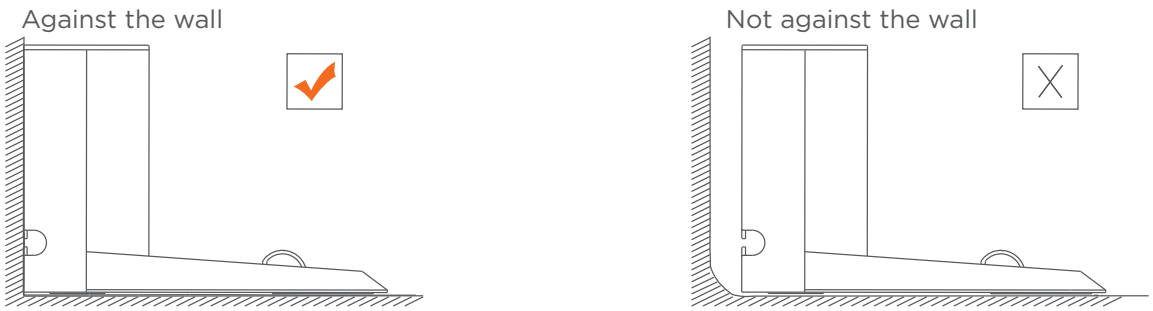

2. Ensure that there is more than 1.2-meter clear space in front and more than 0.5-meter clear space on both sides of the charging base.

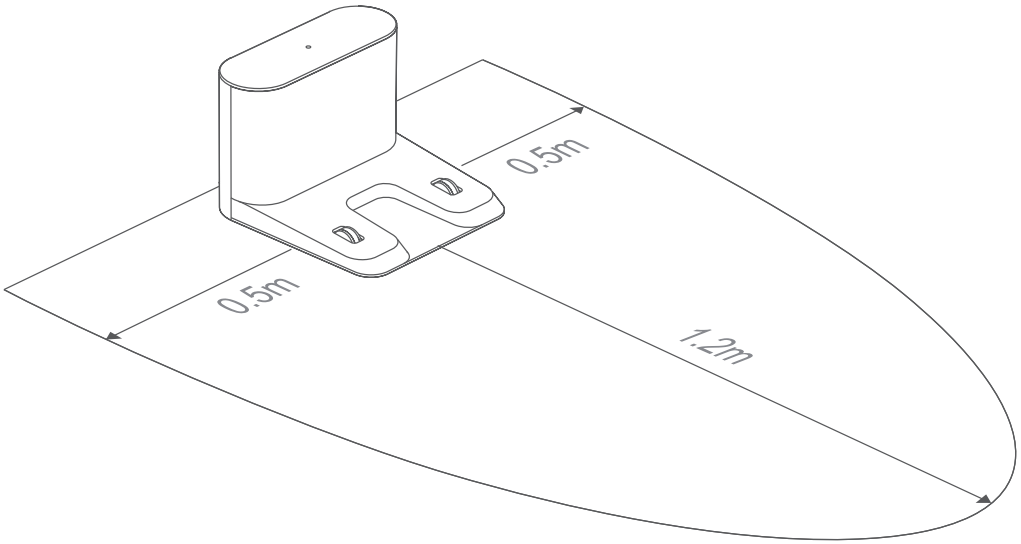

Installation

❸ Long press the ⏻ button for power-on. Press the charging ley, the machine will find the charging base automatically for charging.

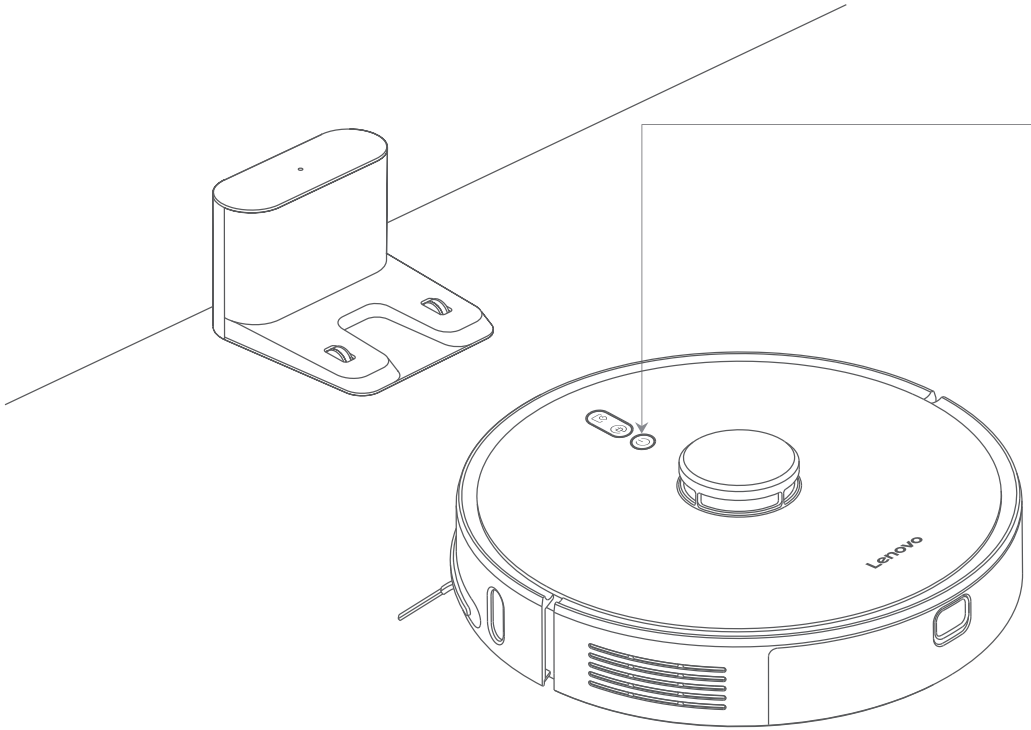

The color of power button indicates the power of the battery.

- White light: power>15%
- Orange breathing light: power<15%

Note: When the power is insufficient, it may not be able to turn on. Please dock the machine on the charging clip of the charging base. The orange light of the power button will be always on when charging.

Installation

2.Install the dust collector

1. Place the dust collector 6mm or more away from the wall on a flat surface

2. Ensure that there is more than 1.2-meter clear space in front and more than 0.5-meter clear space on both sides of the dust collector.

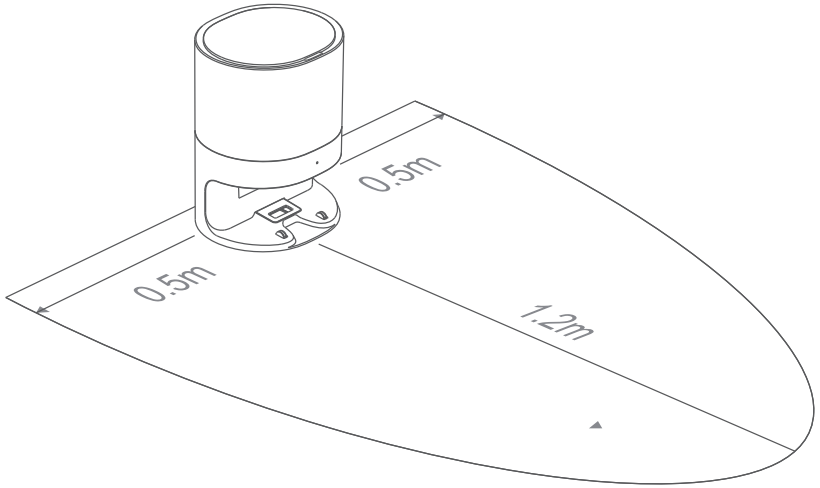

Note:
- If choosing the charging base, please ignore the installation of dust collector
- When charging base and dust collector exist at the same time, place them in different rooms to avoid interference.

Installation

Connect to the mobile client (skip the step if APP control isn't required)

1.Download APP

Search "Lenovo Cleaner T1" in App Store (Apple: search "Lenovo Cleaner T1" in App Store; Android: search "Lenovo Cleaner T1" in Google Play) to download and install.

Lenovo Cleaner T1

2.Register

Open "Lenovo Cleaner T1"APP to register or login account.

3.Enter Network Distribution Status

Put the cleaner on the ground and press the "Charging button" and "Partial cleaning button" for more than 3 seconds. It successfully enters network distribution status if the orange indicator of flashes slowly.

4.WiFi Network Configuration

Make sure that your mobile phone has been connected to WiFi (only support 2.4GHz band. It can't be connected to WiFi which has no password. Please set password prior to your connection. In addition, WiFi name and password should exclude English double quotes).

5.Add Device

Click "Add Device" in the main interface of "Lenovo Cleaner T1"APP or "My Device Interface".

Android phone:

a. Input WiFi name and password, then, click "the Next Step";
b. Select the hotspot of cleaner, then, click "the Next Step";
c. The cleaner start to distribute network after successful automatic connection. If it fails to automatically connect to the hotspot of cleaner please try it again according to the prompt message.

Apple iphone:

a. Connect to home WiFi, input WiFi name and password, then, click "the Next Step";
b. Switch to the WiFi setting interface of your phone to select the corresponding hotspot of cleaner;
c. Return to APP and click to connect to cleaner. Then, the cleaner starts to distribute network;
Use APP to control and use the cleaner if it is connected to WiFi successfully.

Installation

3. Installation and removal of mopping module

1. Install mop: Wet out the mop and dry it until there is no water drop. Put the mop on the mopping module and stick it firmly.

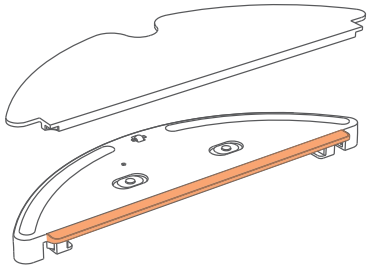

- Do not use the mopping function when there is nobody at home.
- If there are carpets in the home, please set restricted areas on App.

3. Install module: Push the joint on the mopping module in parallel along the back of the machine. When hearing the "click", it means that the installation is in place.

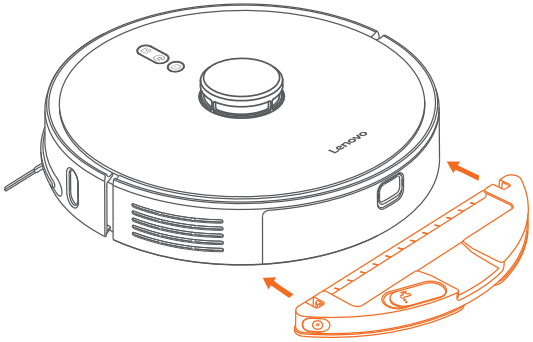

Note: Clean the mop every 30 minutes is recommended,in order to ensure the water effluent speed and cleaning effect.

2. Fill the water tank: Open the water tank cover, fill it with water and install it back.

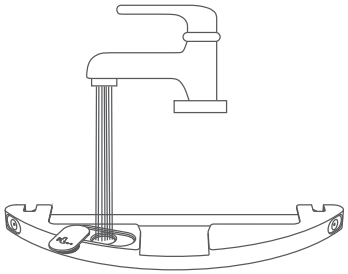

Note: Some floor cleaners or disinfectants can block the filter element in water tank. Please use them cautiously.

4. Remove module: Stop the machine, press the joints on both sides inward by hand, drag backward and remove the mopping module.

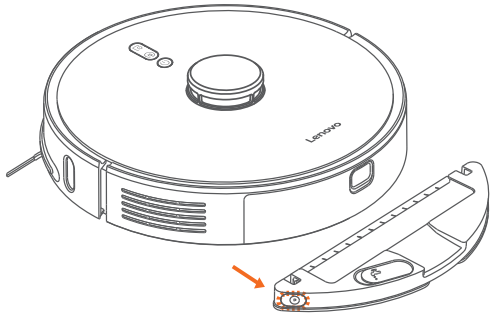

- When charging or not using the machine, remove the mopping module, pour out the remaining water in the water tank and clean the mop to avoid mildewing or odor.
- If placing the charging base on the wooden floor, remove the mopping module in time to avoid floor soaking.

Instructions

Power on/off

Long press button for power-on. The indicator of the button turns on slowly, and the machine gets in standby state. When the machine is stationary, press long button for power-off. The white light slowly extinguishes, and the cleaning is over.
Note: The machine cannot shut down during charging.

Pause

When the machine is running, press any button to pause. If pressing again after pause, the machine will continue to clean, Press button and the machine will go to charge and end the cleaning. Press button and the machine will execute partial cleaning.
Note: If charging the machine by moving it to the charger base during the pause, the cleaning will be ended.

Charge

Automatic mode: After cleaning, the machine will automatically find it way to charge.
Manual mode: In pause state, press button to start charging. When the machine is charging, the orange indicator of the power button is always on. The white breathing indicator will be on when the battery is full.

Note: If the machine does not start cleaning from the charging base or dust collector, auto-charging may fail because the machine will automatically return to the position where it starts. Please manually put the machine back to the charging base or dust collector for charging.

Cleaning mode

After cleaning starts, the machine will scan the room, generate a map and zone the room intelligently. In the zoning, it will firstly clean along the wall, plan the sweeping path and then clean each zone one by one in zigzag, and cover all zones in an orderly and efficient manner. After cleaning, the machine will automatically return to the charging base for charging.

Whole house cleaning

Press the button to start the whole house cleaning (see the picture of cleaning route as below).
Press any button to pause while cleaning.

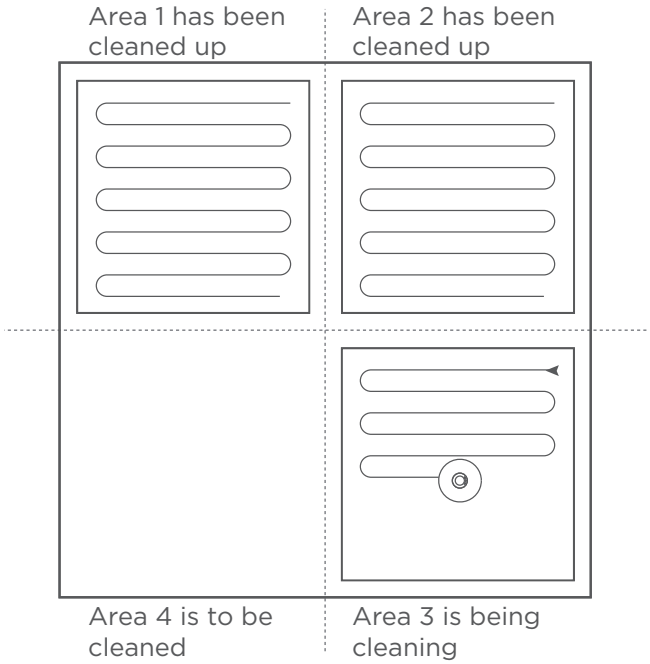

Note:

- It is recommended that the vacuum robot start the cleaning from the charging base or dust collector.
- If the power is too low to start the whole house cleaning, please charge it first and then start the whole house cleaning.
- When the power is insufficient during cleaning, the machine will automatically return to the charging base for charging, and automatically return to the break-off point to continue cleaning when the battery is fully charged.
- Please tidy up all kinds of wires (power lines) on the ground before cleaning, so as to avoid outage and damage to articles or wires caused by the machine dragging when cleaning.

Instructions

Partial cleaning

When the machine is on standby or pause, press the partial cleaning button to start partial cleaning. This mode can clean a 1.6m x 1.6m square area taking the machine as the center. After the cleaning, the machine will automatically return to the starting position and stop working.

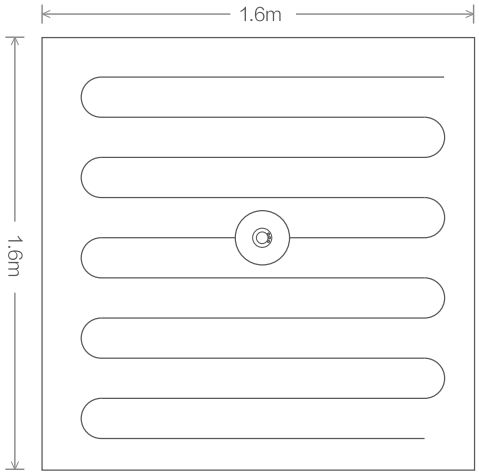

Note: Starting partial cleaning when in pause will end the last cleaning and start a new cleaning task.

Adding water in the water tank or cleaning mop during cleaning

If the machine needs to add water or clean the mop during cleaning, please press the power button to pause before removing the mopping module. After adding water or cleaning mop, re-install the mopping module and press ⏻ to continue working.

Fault condition

When abnormality occurs in the operation of the machine, the power button indicator flashes orange and voice prompt sounds. For solutions, please refer to page 20, "Troubleshooting".

Note: After 10 minutes under the fault condition without operation, the machine will automatically sleep.

Sleep mode

If there is no operation for more than 20 minutes, the machine will enter sleep mode automatically. In the sleep mode, after the breathing light turns out, the machine can be activated by pressing any button.

Note:

The machine will not enter sleep mode when charging on the charging base.
When it turns low battery during sleep mode, the machine will automatically shut down

Reset WiFi

When the configuration of router is changed, password forgotten or the mobile phone fails to connect to the machine by other causes, press and hold the button and button until the voice prompt "Reset WiFi" appears, and then reset the WiFi connection referring to the relevant steps of the WiFi network configuration in the quick setup instructions.

Whole house cleaning

Click on the whole house cleaning in the mobile phone application, the machine will perform the whole house cleaning.

Room cleaning

Click on the room cleaning in the mobile phone application, add and set rooms, then select the room and execute cleaning.

Fixed location cleaning

Select target location in the mobile phone application, the machine will automatically plan the route and get to the selected location.

Zoning cleaning

Set up zoning cleaning function in the mobile phone application, the machine will clean the area designated on the mobile phone.

Standard mode

The default mode is standard mode. Quiet mode, automatic mode, powerful mode and mop-only mode are optional on the mobile client.

Routine maintenance

Main brush (Weekly cleaning is recommended)

1.Turn over the machine, press down the fastener and remove the main brush cover.
2.Take the main brush out and clean the main brush bearing.
3.Cut the winding hair on the main brush with the matching cleaning tool of the main brush.
4.Re-install the main brush and press down the main brush cover tight, then fix the fastener.

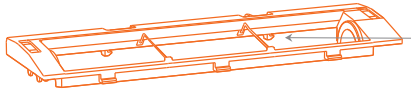

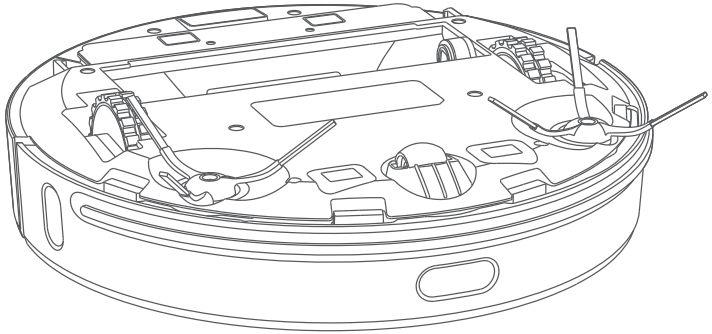

Note: It is recommended to replace the main brush every 6-12 months to ensure the cleaning effect.

Usage of the cleaning tool of center rolling brush

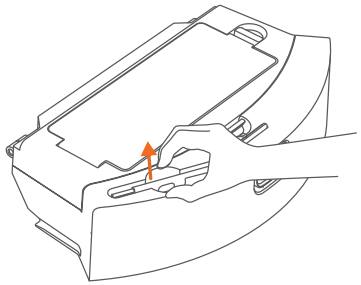

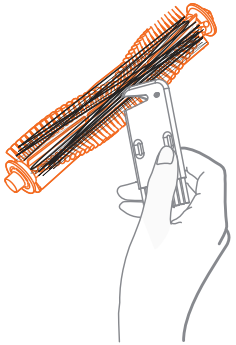

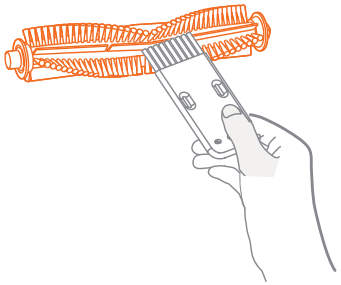

Routine maintenance

Side brush (Weekly cleaning is recommended)

Use a screwdriver to unscrew and clean the side brush.

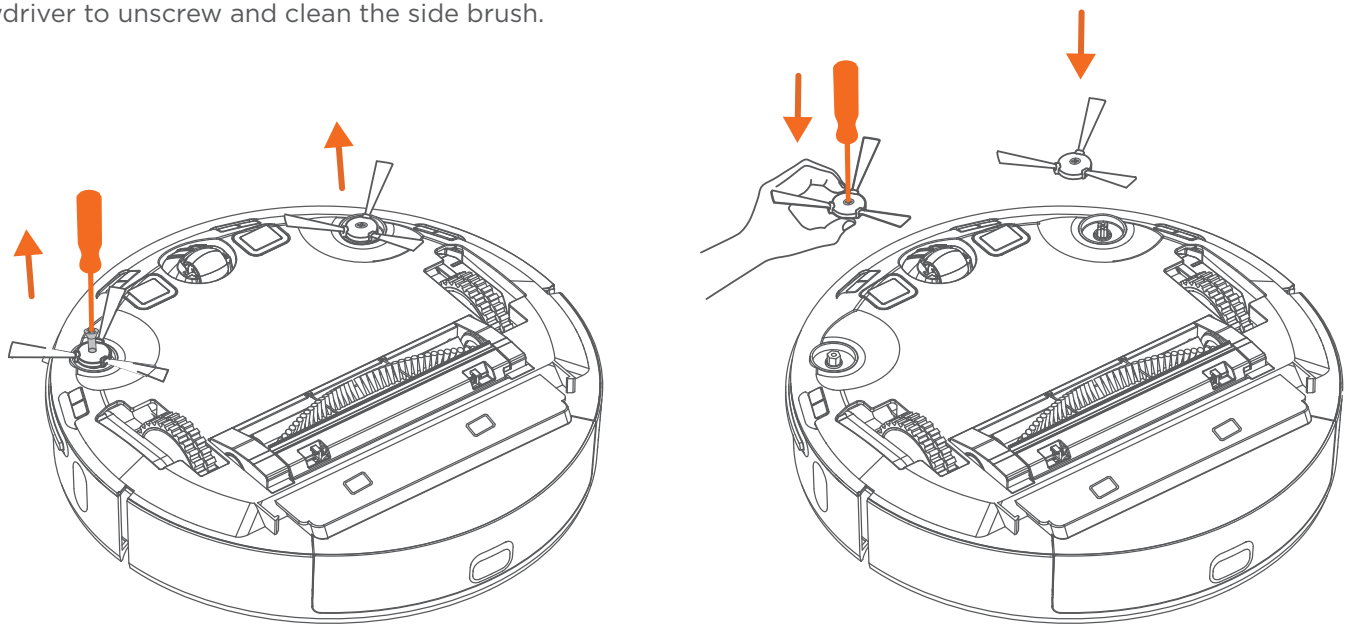

Note: It is recommended to replace the side brushes every 3-6 months to ensure the cleaning effect.

Battery

The machine has built-in high performance rechargeable lithium battery pack. For maintaining battery performance, please keep the machine in charging for daily use.

Note: If not use it for long, please shut down and store it. Charge it at least once every three months to avoid battery damage due to over-discharge.

Routine maintenance

Dust box and filter screen (Weekly cleaning is recommended)

1.Press the dust box releasing button to remove it.

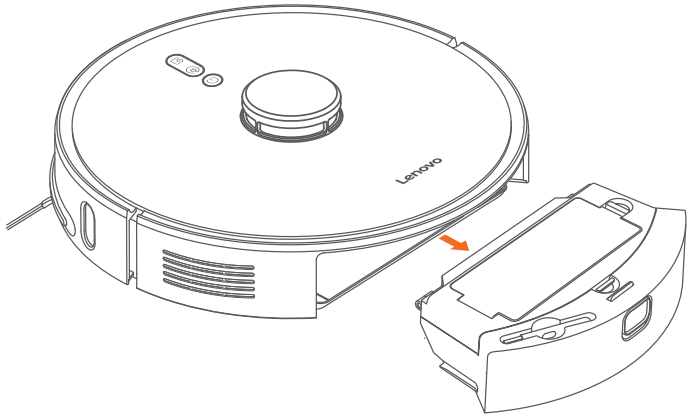

2.Open the dust box fastener.

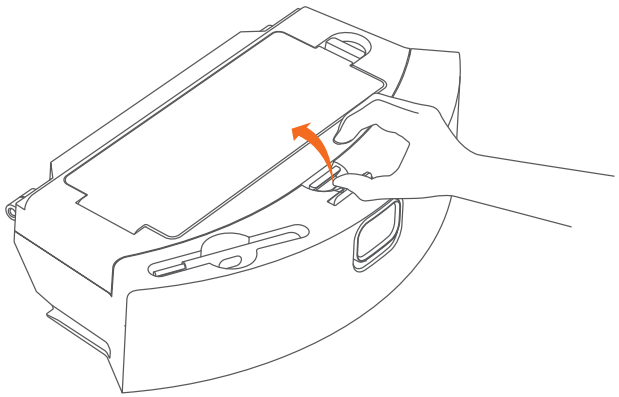

3. Clean up the garbage.

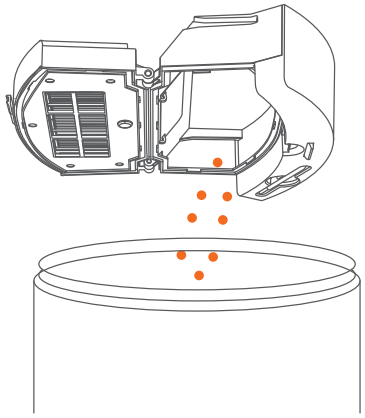

4.Open the dust box cover and remove the mesh cover and filter screen(HEPA).

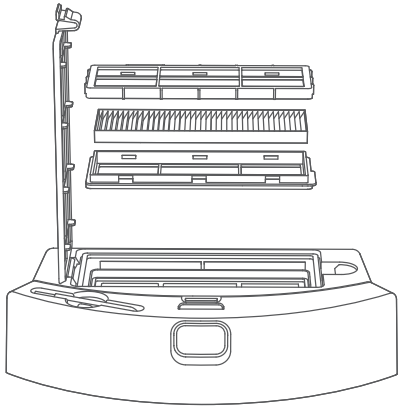

Routine maintenance

5.Shake the garbage off the filter.

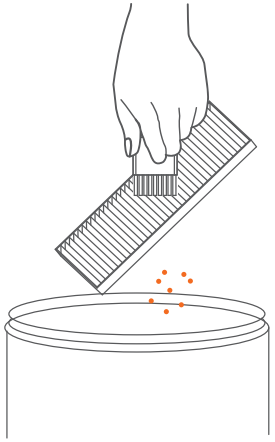

6.Fill the dust box with clean water, close and shake it, then pour out the dirty water inside. Repeat this step several times until the dust box is cleaned up.

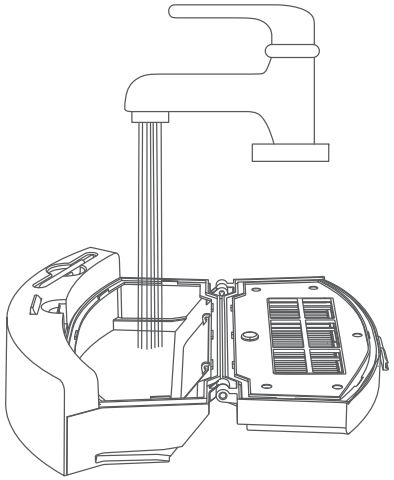

Note: It is recommended to replace the filter every 3-6 weeks.

Mop (Cleaning after each use is recommended)

1.Remove the mop from the mopping module.

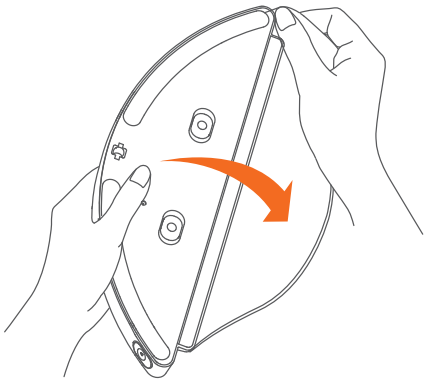

2.Clean mop and air it

Note:

- Make sure wash the mop after taking it off, in order to avoid backfilling of dirty water that would clog the filter element.
- If the mop is too dirty that it will affect the mopping effect, clean it before using.
  It is recommended to replace the mop every 6-12 months to ensure the cleaning effect.

Routine maintenance

Machine Sensor

Wipe the sensors of the machine with a soft and dry cloth, including:

1.Four cliff sensors at the bottom of the machine.
2.Wall sensor on the right side of the machine.
3.Charging docking electrode slice at the bottom of the machine
4.The dust collecting electrode slice at the bottom of the machine.
5.Infrared auxiliary charger sensor.

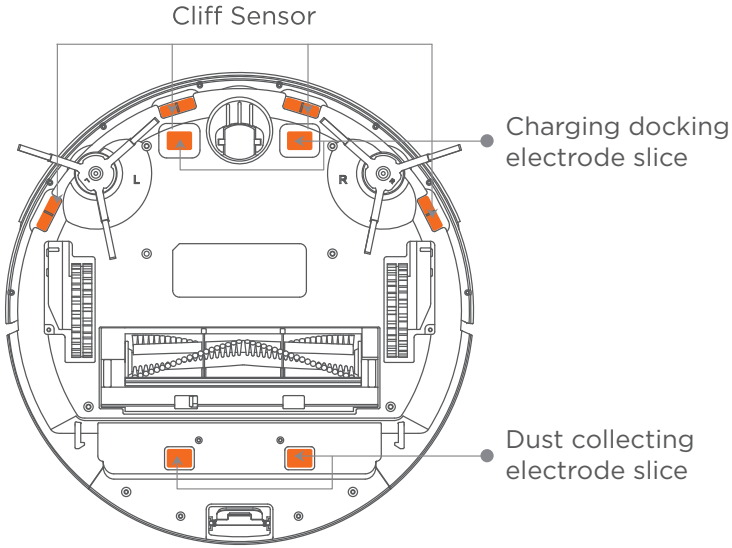

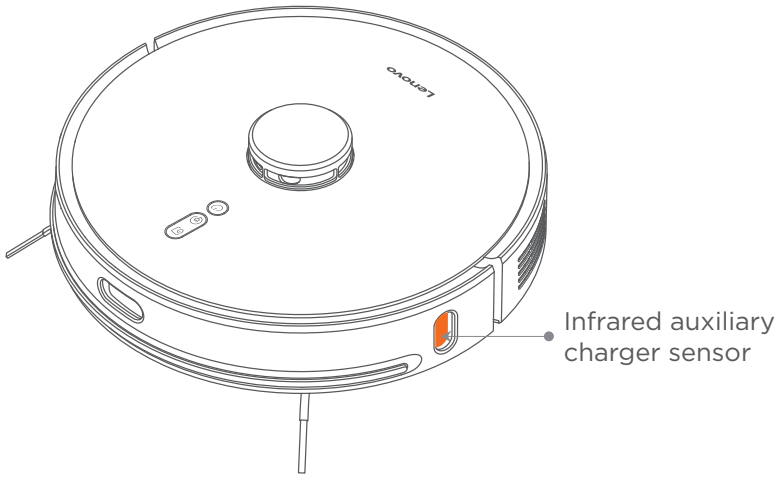

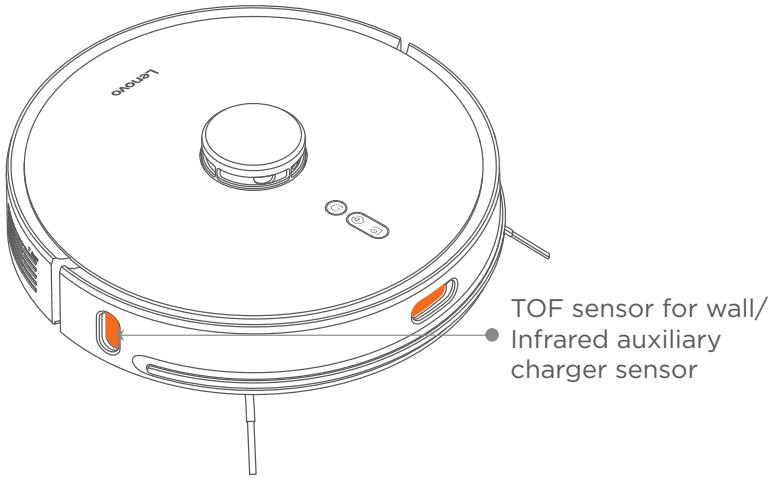

Routine maintenance

Filter element part (Replacement of every 1-3 months is recommended)

1.Remove the old filter element part on the left and right side along the notch with your fingers.
2.Install the new filter element part and confirm that it is in place.

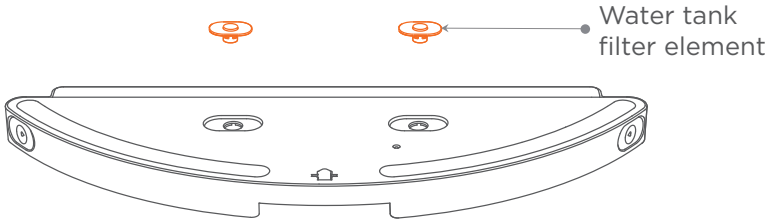

Note: According to the water quality of various regions and frequency of use, it is suggested to replace the filter element part every 1-3 months to ensure the cleaning effect.

Charging base (Monthly cleaning is recommended)Wipe the charging clip with a soft and dry cloth.

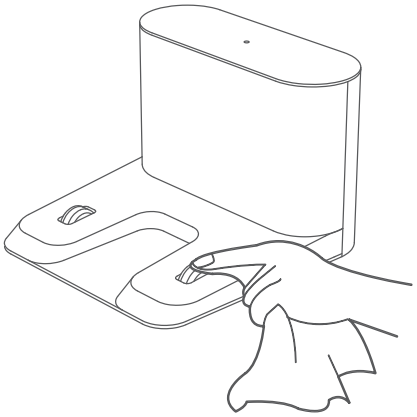

Universal wheel (Monthly cleaning is recommended)

1.Turn over the machine and pull out the universal wheel.
2.Clean the hair and dirt on the wheel and axle.
3.Re-install the wheel and press it tightly.

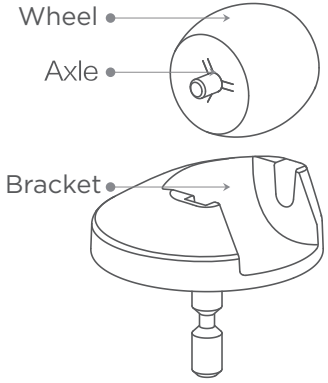

Note: Tap water can be used for cleaning. Re-install it after drying.

Firmware update

The firmware of the machine can be upgraded using the mobile phone client. Please connect to the charging base before upgrading and ensure that the battery is more than 15%.
When firmware is upgrading, the power button indicator shines in white and orange alternately.

Basic parameters

Machine

Name	Parameter
External size	350X350X98mm
Battery type	3200mAh
Product weight	About3.6kg
Rated voltage	14.4V
Rated power	50W

Charging base

Name	Parameter
External size	145 X140X99mm
Rated power	30W
Rated input	24V⎓1.2A
Rated output	24V⎓1.2A

Troubleshooting

When abnormalities occur in the operation of the machine, the power button indicator flashes orange quickly. Please refer to the table below for troubleshooting.

Fault prompt	Resolution
Please check if the radar is covered and move the machine to a new location to start.	If the laser distance sensor is covered or jammed by foreign matters, please remove the cover or the foreign matter. If it doesn't work, please move the machine to a new location to start.
Please check whether the front collision bumper is stuck.	If the collision bumper is stuck, please tap it gently for several times to remove foreign matters. If there are no foreign matters, please move the machine to a new location to start.
Please wipe the cliff sensor and start it away from dangerous areas.	Machine is overhanging, please move the machine to a new location to start. If the cliff sensor is too dusty, it may also cause the fault. Please wipe the cliff sensor.
Please check whether the main brush is twisted or stuck.	The main brush may be twisted with foreign matters. Please remove the main brush and bearing， and clean it up.
Please check whether the side brush is twisted or stuck.	The side brush may be twisted with foreign matters. Please remove the side brush and clean it up.

FAQ

Fault prompt	Resolution
Please check whether the main wheel is stuck.	The machine may be stuck or trapped. Please clear the obstacles around the machine.
Dust box removed	Please install the dust box and filter screen, and make sure that they are installed in place.
Clean the dust box and filter screen.	If the filter screen is not entirely dry, please air it for at least 24 hours. The filter screen may be blocked, please clean it. If the problem is not solved, please change for a new filter screen.
Insufficient power, return to charge	The battery is low. Please charge it first.
Fan fault	Vacuum fan doesn't work properly, please try to shut down and restart.
Wipe the sensor on the right side of the machine and move it to a new location to start.	The sensor for wall is covered by dust. Please wipe the sensor.
Please check if the top radar cover is covered or jammed.	The pressure sensor of laser head is covered or jammed, please move the machine to a new location to start.
Battery damaged or not installed	The temperature of the battery is too high or too low, please wait for the temperature of the battery gets normal and then use the machine again.
Fail to boot	Battery power is insufficient, please charge it on the charging base before using.The ambient temperature is too low (below 0°C) or too high (above 50°C), please use it in 0°C - 40°C environment.
Fail to charge	The charging base is not energized. please make sure that both ends of the power cord of the charging base are plugged properly. If there is poor contact, please clean up the clips on the charging base and the machine. It may also be interfered by the side brush. Please make sure that the charging base indicator is on.

Note: Restart after shutdown can eliminate some abnormalities.

FAQ

Fault prompt	Resolution
Fail to return to the charging base	There are too many obstacles near the charging base. Please put the charging base in an open area. The machine is too far from the charging base. Please put the machine near the charging base and retry.
Abnormal behavior	Reboot the machine.
Abnormal noise occurs when cleaning	Main brush, side brush or main wheel may be twisted with foreign matters. Please shut down and clean.
Decrease in cleaning capacity or dust leakage	The dust box is full, please clean it. The filter screen has been blocked, please clean it. The main brush is twisted by foreign matters, please clean it.
Fail to connect to WiFi	Poor WiFi signal. Please make sure that the machine is in an area with good Wi-Fi signal coverage; Abnormal WiFI connection. Please download the latest client, reset WIFI and try connecting again. Wrong WIFI password. Please reconfirm if the password is correct.
Timed-cleaning does not take effect	Insufficient power. Timed-cleaning would only be activated if the remaining power is more than 30%.
Whether the machine consumes electricity if it stays at the charging base all the time	When the machine is on the charging base, the power consumption is extremely low. It is conducive to maintaining the best performance of the battery.
Is it necessary to charge the machine for 16 hours for the first three times of cleaning?	Lithium batteries have no memory effect. You can use it anytime once the battery is fully charged. Not necessary to wait for 16 hours.
No or little water effluence from the mopping module	Please check whether the water tank cover is in place. Clean the mop. Change the filter element. Install the mop correctly according to the instruction.
Too much water effluence from the mopping module	Please make sure that the water tank cover and the filter element are installed in place.
Return for charging during cleaning but never continue cleaning	Please make sure that the machine is not in the Do-not disturb Mode. When in the Do-not disturb Mode, the machine will not continue cleaning. Manual charging or putting the machine back to the charging base will not continue cleaning.
Failure to return to the charging base after partial cleaning or moving to a different location	After partial cleaning or moving the position of the machine far away, the machine will regenerate the map, such as the charging base. If it is too distant, the machine may not be able to return to the charging base automatically. Please manually put the machine back to the charging base for charging.

Warranty information

Product name	Warranty coverage	Part name	Warranty Period (Month)	Warranty Service Type	Remarks
Robot Vacuum Cleaner	Main components	Machine	12	Fetch, send, express and repair	
	Peripheral components	Charging base, power cord	12	Fetch, send, express and repair	
	Consumables	Edge brush, main brush, filter screen, main brush cover, mop, filter element	0	Not applicable	
	Software	Attached software (including attached software materials)	0	Not applicable	

Warranty card

Dear users, this warranty card is your certificate to apply for warranty, please cooperate with the seller to fill in and keep it properly!

Information	Address		Postal Code	
	Contact number			
	Product name		Product Bar Code/Serial Number/Batch Number	
Product information	Product model			
Seller Information	Name			
	Address			
	Contact number		Postal Code	
	Sales date		Invoice number	
Remarks				

If you need any support relates to your product please contact the agency you purchased from.

FCC STATEMENT

1. This device complies with Part 15 of the FCC Rules. Operation is subject to the following two conditions:
(1) This device may not cause harmful interference, and
(2) This device must accept any interference received, including interference that may cause undesired operation.

2. Changes or modifications not expressly approved by the party responsible for compliance could void the user's authority to operate the equipment.

NOTE: This equipment has been tested and found to comply with the limits for a Class B digital device, pursuant to Part 15 of the FCC Rules. These limits are designed to provide reasonable protection against harmful interference in a residential installation. This equipment generates uses and can radiate radio frequency energy and, if not installed and used in accordance with the instructions, may cause harmful interference to radio communications. However, there is no guarantee that interference will not occur in a particular installation. If this equipment does cause harmful interference to radio or television reception, which can be determined by turning the equipment off and on, the user is encouraged to try to correct the interference by one or more of the following measures:

Reorient or relocate the receiving antenna.
Increase the separation between the equipment and receiver.
Connect the equipment into an outlet on a circuit different from that to which the receiver is connected.
Consult the dealer or an experienced radio/TV technician for help.

FCC Radiation Exposure Statement

This equipment complies with FCC radiation exposure limits set forth for an uncontrolledenvironment. This equipment should be installed and operated with minimum distance 20cm between the radiator & your body.