Certificate # 2861.01

TEST REPORT

Verified Code: 664301

Report No.:	E20201007701201-3	**Application No.:**	E20201007701201
Client:	Fiberhome Telecommunication Technologies Co., Ltd.		
Address:	No.88 Youkeyuan Road, Hongshan District, Wuhan,Hubei, China		
Sample Description:	Wireless Router		
Model:	SR1041D		
Test Specification:	CFR 47, FCC Parts Subpart E Unlicensed National Information Infrastructure Devices		
Receipt Date:	2020-10-14		
Test Date:	2020-10-22 to 2020-12-03		
Issue Date:	2021-04-21		
Test Result:	Pass		

Prepared By:	**Reviewed By:**	**Approved By:**
Test Engineer	Technical Manager	Manager
Xie Fang	Jiang Tao	John Lan

Other Aspects:

Note: Note

Abbreviations: *ok / P = passed; fail / F = failed; n.a. / N = not applicable;*

The test result in this test report refers exclusively to the presented test sample. This report shall not be reproduced except in full, without the written approval of GRGT.

DIRECTIONS OF TEST

1. **This station carries out test task according to the national regulation of verifications which can be traced to National Primary Standards and BIPM.**

2. **The test report merely corresponds to the test sample. It is not permitted to copy extracts of these test result without the written permission of the test laboratory.**

3. **If there is any objection concerning the test, the client should inform the laboratory within 15 days from the date of receiving the test report.**

TABLE OF CONTENTS

1. TEST RESULT SUMMARY 4

2. GENERAL DESCRIPTION OF EUT 5

2.1. APPLICANT 5
2.2. MANUFACTURER 5
2.3. FACTORY 5
2.4. BASIC DESCRIPTION OF EQUIPMENT UNDER TEST 5
2.5. TEST OPERATION MODE 8
2.6. LOCAL SUPPORTIVE INSTRUMENTS 8

3. LABORATORY AND ACCREDITATIONS 11

3.1. LABORATORY 11
3.2. ACCREDITATIONS 11
3.3. MEASUREMENT UNCERTAINTY 11

4. LIST OF USED TEST EQUIPMENT AT GRGT 12

5. CONDUCTED EMISSION MEASUREMENT 13

5.1. LIMITS 13
5.2. TEST PROCEDURES 13
5.3. TEST SETUP 14
5.4. DATA SAMPLE 14
5.5. TEST RESULTS 15

6. RADIATED SPURIOUS EMISSIONS 17

6.1. LIMITS 17
6.2. TEST PROCEDURES 17
6.3. TEST SETUP 19
6.4. DATA SAMPLE 20
6.5. TEST RESULTS 20

7. RESTRICTED BANDS OF OPERATION 95

7.1. LIMITS 95
7.2. TEST PROCEDURES 95
7.3. TEST SETUP 96
7.4. TEST RESULTS 97

8. 6DB BANDWIDTH &26DB BANDWIDTH & 99% OCCUPIED BANDWIDTH 155

8.1. LIMITS 155
8.2. TEST PROCEDURES 155
8.3. TEST SETUP 156
8.4. TEST RESULTS 157

9. OUTPUT POWER 190

9.1. LIMITS 190
9.2. TEST PROCEDURES 190
9.3. TEST SETUP 190
9.4. TEST RESULTS 191

10. POWER SPECTRAL DENSITY 196

10.1. LIMITS 196
10.2. TEST PROCEDURES 196
10.3. TEST SETUP 196
10.4. TEST RESULTS 197

11. FREQUENCY STABILITY 243

11.1. LIMITS 243
11.2. TEST PROCEDURES 243

11.3. TEST SETUP 243
11.4. TEST RESULTS 244

1. TEST RESULT SUMMARY

Standard	Item	Limit / Severity	Result
CFR 47, FCC Parts Subpart E (§15.407)	6dB Bandwidth &26dB Bandwidth & 99% Occupied Bandwidth	15.407(a) 15.407(e)	PASS
	AC Power Line Conducted Emissions	15.207 15.407(b)(8)	PASS
	Unwanted Emissions and Band Edge	15.205 15.209 15.407(b)	PASS
	Output Power	15.407(a)	PASS
	Peak Power Spectral Density	15.407(a)	PASS
	Frequency Stability	15.407(g)	PASS
	Antenna Requirement	15.203	PASS[1)]

Note: [1)] EUT has two antennas. The antennas are External antennas.
Part of U-NII-1:The max gain of antenna 1 is 5.85dBi and the max gain of antenna 2 is 5.74dBi;
Part of U-NII-2A:The max gain of antenna 1 is 5.32dBi and the max gain of antenna 2 is 5.46dBi ;
Part of U-NII-2C:The max gain of antenna 1 is 4.56dBi and the max gain of antenna 2 is 5.01dBi ;
Part of U-NII-3:The max gain of antenna 1 is 5.35dBi and the max gain of antenna 2 is 5.50dBi ;
which accordance 15.203.is considered sufficient to comply with the provisions of this section

2. GENERAL DESCRIPTION OF EUT

2.1. APPLICANT

Name:	Fiberhome Telecommunication Technologies Co., Ltd.
Address:	No.88 Youkeyuan Road, Hongshan District, Wuhan,Hubei, China

2.2. MANUFACTURER

Name:	Fiberhome Telecommunication Technologies Co., Ltd.
Address:	No.88 Youkeyuan Road, Hongshan District, Wuhan,Hubei, China

2.3. FACTORY

Name:	Fiberhome Telecommunication Technologies Co.Ltd.
Address:	No.67,Chuangye Street,East Lake High-tech Development Zone,Wuhan City,Hubei Province,P.R.China

2.4. BASIC DESCRIPTION OF EQUIPMENT UNDER TEST

Equipment:	Wireless Router
Model No.:	SR1041D
Adding Model:	/
Trade Name:	FiberHome
FCC ID:	2AV2N-SR1041D
Power supply:	DC12V power supplied by adapter
Adapter Specification:	Model: RD1201000-C55-35MGD Input: 100-240V~50/60Hz 0.6A MAX Output: 12.0V ⎓ 1.0A
Operation Frequency:	U-NII-1: 5150 MHz~5250 MHz U-NII-2A: 5250 MHz~5350 MHz U-NII-2C: 5470 MHz~5725 MHz U-NII-3: 5725 MHz~5850 MHz
Modulation type:	OFDM
Number Of Channel	U-NII-1: IEEE 802.11a / n HT20 / ac VHT20: 4 Channels IEEE 802.11n HT40 / ac VHT40: 2 Channels IEEE 802.11ac VHT80: 1 Channel U-NII-2A: IEEE 802.11a / n HT20 / ac VHT20: 4 Channels IEEE 802.11n HT40 / ac VHT40: 2 Channels IEEE 802.11ac VHT80: 1 Channel U-NII-2C:

	IEEE 802.11a / n HT20 / ac VHT20: 11 Channels IEEE 802.11n HT40 / ac VHT40: 5 Channels IEEE 802.11ac VHT80: 2 Channel U-NII-3: IEEE 802.11a / n HT20 / ac VHT20: 5 Channels IEEE 802.11n HT40 / ac VHT40: 2 Channels IEEE 802.11ac VHT80: 1 Channel
Channels Spacing:	IEEE 802.11a: 20MHz IEEE 802.11n HT20: 20MHz IEEE 802.11n HT40: 40MHz IEEE 802.11ac VHT20: 20MHz IEEE 802.11ac VHT40: 40MHz IEEE 802.11ac VHT80: 80MHz
Transmit Power:	**Non-Beamforming** U-NII-1: 18.87dBm for IEEE 802.11a (antenna 1) 18.75dBm for IEEE 802.11a (antenna 2) 17.90dBm for IEEE 802.11n HT20(MIMO) 16.94dBm for IEEE 802.11ac VHT20(MIMO) 16.96dBm for IEEE 802.11n HT40(MIMO) 16.84dBm for IEEE 802.11ac VHT40(MIMO) 16.45dBm for IEEE 802.11ac VHT80(MIMO) U-NII-2A: 18.85dBm for IEEE 802.11a (antenna 1) 18.78dBm for IEEE 802.11a (antenna 2) 15.21dBm for IEEE 802.11n HT20(MIMO) 14.36dBm for IEEE 802.11ac VHT20(MIMO) 16.94dBm for IEEE 802.11n HT40(MIMO) 16.79dBm for IEEE 802.11ac VHT40(MIMO) 16.68dBm for IEEE 802.11ac VHT80(MIMO) U-NII-2C: 18.84dBm for IEEE 802.11a (antenna 1) 18.81dBm for IEEE 802.11a (antenna 2) 15.73dBm for IEEE 802.11n HT20(MIMO) 15.17dBm for IEEE 802.11ac VHT20(MIMO) 16.95dBm for IEEE 802.11n HT40(MIMO) 16.82dBm for IEEE 802.11ac VHT40(MIMO) 16.94dBm for IEEE 802.11ac VHT80(MIMO) U-NII-3: 18.85dBm for IEEE 802.11a (antenna 1) 18.83dBm for IEEE 802.11a (antenna 2) 17.96dBm for IEEE 802.11n HT20(MIMO) 16.96dBm for IEEE 802.11ac VHT20(MIMO)

16.93dBm for IEEE 802.11n HT40(MIMO)
16.84dBm for IEEE 802.11ac VHT40(MIMO)
16.86dBm for IEEE 802.11ac VHT80(MIMO)

Beamforming

U-NII-1:
17.69dBm for IEEE 802.11n HT20(MIMO)
16.53dBm for IEEE 802.11ac VHT20(MIMO)
16.79dBm for IEEE 802.11n HT40(MIMO)
16.65dBm for IEEE 802.11ac VHT40(MIMO)
16.04dBm for IEEE 802.11ac VHT80(MIMO)
U-NII-2A:
14.84dBm for IEEE 802.11n HT20(MIMO)
14.03dBm for IEEE 802.11ac VHT20(MIMO)
16.70dBm for IEEE 802.11n HT40(MIMO)
16.60dBm for IEEE 802.11ac VHT40(MIMO)
16.10dBm for IEEE 802.11ac VHT80(MIMO)
U-NII-2C:
15.36 dBm for IEEE 802.11n HT20(MIMO)
14.78dBm for IEEE 802.11ac VHT20(MIMO)
16.76dBm for IEEE 802.11n HT40(MIMO)
16.65dBm for IEEE 802.11ac VHT40(MIMO)
16.74dBm for IEEE 802.11ac VHT80(MIMO)
U-NII-3:
17.61dBm for IEEE 802.11n HT20(MIMO)
16.51dBm for IEEE 802.11ac VHT20(MIMO)
16.74dBm for IEEE 802.11n HT40(MIMO)
16.56dBm for IEEE 802.11ac VHT40(MIMO)
16.41dBm for IEEE 802.11ac VHT80(MIMO)

Antenna Specification:	U-NII-1: External antenna 1 with 5.85dBi gain (Max.) External antenna 2 with 5.74dBi gain (Max.) U-NII-2A: External antenna 1 with 5.32dBi gain (Max.) External antenna 2 with 5.46dBi gain (Max.) U-NII-2C: External antenna 1 with 4.56dBi gain (Max.) External antenna 2 with 5.01dBi gain (Max.) U-NII-3: External antenna 1 with 5.35dBi gain (Max.) External antenna 2 with 5.50dBi gain (Max.)
Temperature Range:	-5 ℃ ~ +45 ℃
Hardware	SR1041D_R1A

Version:	
Software Version:	RP0100
Sample No:	E20201007701201-0003, E20201007701201-0008,
Note:	The produt is indoor AP, it have transmit Power Control function

2.5. TEST OPERATION MODE

Test Item	Mode No.	Description of the modes
Conducted Emission	1	5G wifi fixed transmitting
Radiated Emission	1	5G wifi fixed transmitting

Note: The items of radiated emission just record the worst case of 20MHz/40MHz/80MHz bandwith.

2.6. LOCAL SUPPORTIVE INSTRUMENTS

Name of Equipment	Manufacturer	Model	Serial Number	Note
Notebook	LENOVO	TianYi 310-14ISK	MP18DLC6	/
Adapter (Notebook)	LENOVO	ADLX65NCC3A	N/A	/
Cable				
AC cable	/	/	/	Unshielded, 1.00m
DC cable	/	/	/	Shielded, 1.80m

Test software:

Software version
Mp_tool_0417

Non beamforming

Mode	Frequecy (MHz)	Power Setting	Frequecy (MHz)	Power Setting
IEEE 802.11a	5180	111/114	5500	107/109
	5200	111/114	5580	106/109
	5240	111/114	5700	109/110
	5260	113/113	5745	109/108
	5300	113/112	5785	110/108
	5320	99/103	5825	111/108

Mode	Frequecy (MHz)	Power Setting	Mode	Frequecy (MHz)	Power Setting
IEEE 802.11n HT20	5180	102/102	IEEE 802.11ac VHT20	5180	98/97
	5200	101/101		5200	97/97
	5240	101/101		5240	96/96
	5260	82/80		5260	79/79
	5300	82/81		5300	78/77
	5320	83/81		5320	79/78
	5500	81/78		5500	78/75
	5580	81/80		5580	79/75
	5700	86/90		5700	86/85
	5745	99/96		5745	91/90
	5785	98/98		5785	91/90
	5825	98/97		5825	92/90

IEEE 802.11n HT40	5190	91/88	IEEE 802.11ac VHT40	5190	90/87
	5230	90/88		5230	89/87
	5270	90/89		5270	89/88
	5310	90/90		5310	89/89
	5510	88/82		5510	87/81
	5550	88/84		5550	87/83
	5670	93/94		5670	92/93
	5755	94/90		5755	93/89
	5795	93/90		5795	92/89

Mode	Frequecy (MHz)	Power Setting	Frequecy (MHz)	Power Setting
IEEE 802.11ac VHT80	5210	96/96	5610	93/94
	5290	99/98	5775	93/95
	5530	93/93	/	/

Beamforming

Mode	Frequecy (MHz)	Power Setting	Mode	Frequecy (MHz)	Power Setting
IEEE 802.11n HT20	5180	101/101	IEEE 802.11ac VHT20	5180	97/96
	5200	100/100		5200	96/96
	5240	100/100		5240	95/95
	5260	81/79		5260	78/78
	5300	81/80		5300	77/76
	5320	82/80		5320	78/77
	5500	80/77		5500	77/74
	5580	80/79		5580	78/74
	5700	85/89		5700	85/84
	5745	98/95		5745	90/89
	5785	97/97		5785	90/89
	5825	97/96		5825	91/89

IEEE 802.11n HT40	5190	90/87	IEEE 802.11ac VHT40	5190	89/86
	5230	89/87		5230	88/86
	5270	89/88		5270	88/87
	5310	89/89		5310	88/88
	5510	87/81		5510	86/80
	5550	87/83		5550	86/82
	5670	92/93		5670	91/92
	5755	93/89		5755	92/88
	5795	92/89		5795	91/88

Mode	Frequecy (MHz)	Power Setting	Frequecy (MHz)	Power Setting
IEEE 802.11ac VHT80	5210	95/95	5610	92/93
	5290	98/97	5775	92/94
	5530	92/92	/	/

3. LABORATORY AND ACCREDITATIONS

3.1. LABORATORY

The tests & measurements refer to this report were performed by Shenzhen EMC Laboratory of Guangzhou GRG Metrology & Test Co,. Ltd.

Add : Address: No.1301 Guanguang Road Xinlan Community, Guanlan Street, Longhua District Shenzhen, 518110, People's Republic of China

P.C. : 518000

Tel : 0755-61180008

Fax : 0755-61180008

3.2. ACCREDITATIONS

Our laboratories are accredited and approved by the following approval agencies according to GB/T 27025(ISO/IEC 17025:2017)

USA	A2LA(Certificate #:2861.01)

The measuring facility of laboratories has been authorized or registered by the following approval agencies.

Canada	Industry Canada
USA	FCC

Copies of granted accreditation certificates are available for downloading from our web site, http://www.grgtest.com

3.3. MEASUREMENT UNCERTAINTY

Where relevant, the following measurement uncertainty levels have been estimated for tests performed on the EUT as specified in CISPR 16-4-2:

Measurement		Frequency	Uncertainty
Radiated Emission	Horizontal	30MHz～1000MHz	4.30dB
		1GHz～18GHz	5.60dB
		18GHz～26GHz	3.65dB
		26GHz～40GHz	4.00dB
	Vertical	30MHz～1000MHz	4.30dB
		1GHz～18GHz	5.60dB
		26GHz～40GHz	4.00dB
Conduction Emission		9 kHz ~ 150 kHz	2.80dB
		150 kHz ~ 10 MHz	2.80dB
		10 MHz ~ 30 MHz	2.20dB

This uncertainty represents an expanded uncertainty factor of k=2.

4. LIST OF USED TEST EQUIPMENT AT GRGT

Name of Equipment	Manufacturer	Model	Serial Number	Calibration Due
Conducted Emissions				
EMI TEST RECEIVER	R&S	ESCI	100783	2021-10-08
LISN(EUT)	R&S	ENV216	101543	2021-03-24
Radiated Spurious Emission& Restricted bands of operation				
TEST RECEIVER	R&S	ESU26	EMC26-G260	2021-09-22
Spectrum Analyzer	Agilent	N9010A	MY52221469	2021-05-16
Bilog Antenna	Schwarzbeck	VULB 9163	01279	2021-03-14
Horn Antenna	Schwarzbeck	BBHA 9120D(1201)	02143	2021-12-27
Board-Band Horn Antenna	Schwarzbeck	BBHA 9170	BBHA 9170-497	2021-11-05
Amplifier	Tonscend	TAP9E6343	AP20E806065	2021-06-28
Amplifier	Tonscend	TAP01018048	AP20E8060075	2021-06-28
Amplifier	Tonscend	TAP037030	AP20E8060081	2021-06-28
Amplifier	Tonscend	TAP184050	AP20E806071	2021-06-15
Test S/W	Tonscend	JS32-RE/2.5.1.5		
6 dB Bandwidth&26DB Bandwidth & 99% Occupied bandwidth				
Spectrum Analyzer	Agilent	N9010A	MY52221469	2021-05-16
Output Power				
Pulse power sensor	Agilent	MA2411B	1126150	2021-04-13
Power meter	Anritsu	ML2495A	1204003	2021-04-13
Frequency Stability				
Spectrum Analyzer	Agilent	N9010A	MY52221469	2021-05-16
High and low temperature humid heat test box	HOSON	HS01060SDF	191008401	2021-10-15
Power Spectral Density				
Spectrum Analyzer	Agilent	N9010A	MY52221469	2021-05-16

Note: The calibration interval of the above test instruments is 12 months.

5. CONDUCTED EMISSION MEASUREMENT

5.1. LIMITS

Frequency range	Limits (dBμV)	
	Quasi-peak	Average
150kHz ～ 0.5MHz	66～56	56～46
0.5 MHz ～ 5 MHz	56	46
5 MHz ～ 30 MHz	60	50

NOTE: (1) The lower limit shall apply at the transition frequencies.
(2) The limit decreases in line with the logarithm of the frequency in the range of 150 kHz to 0.5MHz.

5.2. TEST PROCEDURES

Procedure of Preliminary Test

Test procedures follow ANSI C63.10:2013.

For measurement of the disturbance voltage the equipment under test (EUT) is connected to the power supply mains and any other extended network via one or more artificial network(s). An EUT, whether intended to be grounded or not, and which is to be used on a table is configured as follows:

– Either the bottom or the rear of the EUT shall be at a controlled distance of 40 cm from a reference ground plane. This ground plane is normally the wall or floor of a shielded room. It may also be a grounded metal plane of at least 2 m by 2 m. This is physically accomplished as follows:

1) place the EUT on a table of non-conducting material which is at least 80 cm high. Place the EUT so that it is 40 cm from the wall of the shielded room, or

2) place the EUT on a table of non-conducting material which is 40 cm high so that the bottom of the EUT is 40 cm above the ground plane;

– All other conductive surfaces of the EUT shall be at least 80 cm from the reference ground plane;

– The EUT are placed on the floor that one side of the housings is 40 cm from the vertical reference ground plane and other metallic parts;

– Interconnecting cables that hang closer than 40 cm to the ground plane shall be folded back and forth forming a bundle 30 cm to 40 cm long, hanging approximately in the middle between the ground plane and the table.

– I/O cables that are connected to a peripheral shall be bundled in the centre. The end of the cable may be terminated if required using correct terminating impedance. The total length shall not exceed 1 m.

The test mode(s) described in Item 2.4 were scanned during the preliminary test. After the preliminary scan, we found the test mode described in Item 2.4 producing the highest emission level. The EUT configuration and cable configuration of the above highest emission levels were recorded for reference of the final test.

Procedure of Final Test

EUT and support equipment were set up on the test bench as per the configuration with highest emission level in the preliminary test. A scan was taken on both power lines, recording at least the six highest emissions. Emission frequency and amplitude were recorded into a computer in which correction factors were used to calculate the emission level and compare reading to the applicable limit. The test data of the worst-case condition(s) was recorded.

5.3. TEST SETUP

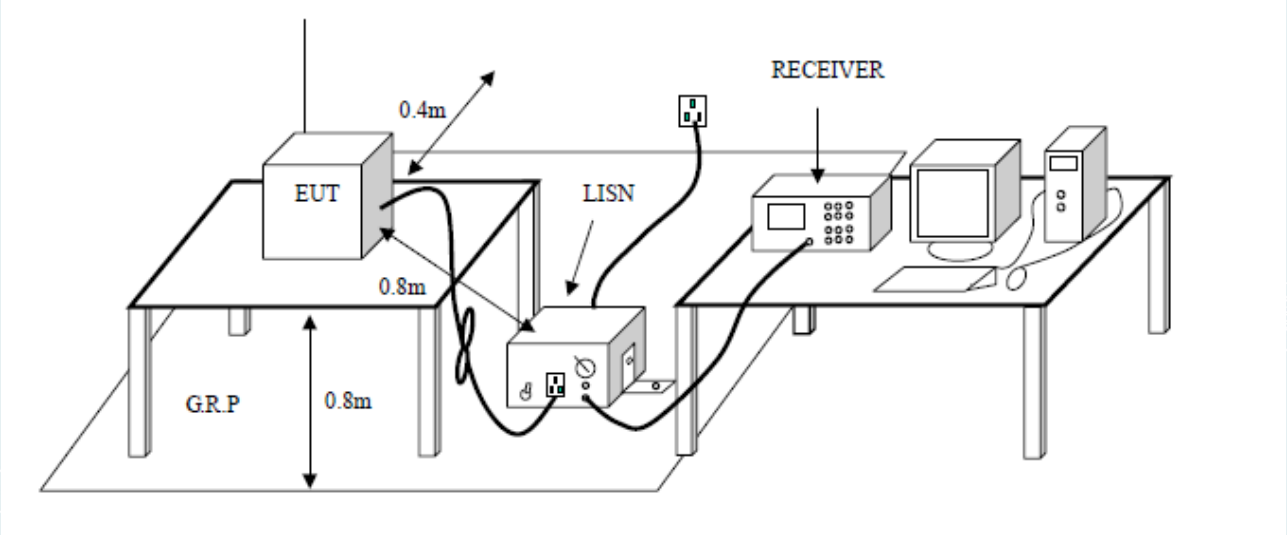

5.4. DATA SAMPLE

Frequency (MHz)	QuasiPeak Reading (dBuV)	Average Reading (dBuV)	Correction Factor (dB)	QuasiPeak Result (dBuV)	Average Result (dBuV)	QuasiPeak Limit (dBuV)	Average Limit (dBuV)	QuasiPeak Margin (dB)	Average Margin (dB)	Remark (Pass/Fail)
X.XXXX	32.69	25.65	11.52	44.21	37.17	65.78	55.79	-21.57	-18.62	Pass

Factor = Insertion loss of LISN + Cable Loss
Result = Quasi-peak Reading/ Average Reading + Factor
Limit = Limit stated in standard
Margin = Result (dBuV) – Limit (dBuV)

5.5. TEST RESULTS

Model No.	SR1041D	**RBW,VBW**	9 kHz
Environmental Conditions	25.8℃/48%RH	**Test Mode**	Mode 1
Tested By	Luo Ping	**Line**	L
Tested Date	2020/10/22	**Test Voltage**	AC120V/60Hz

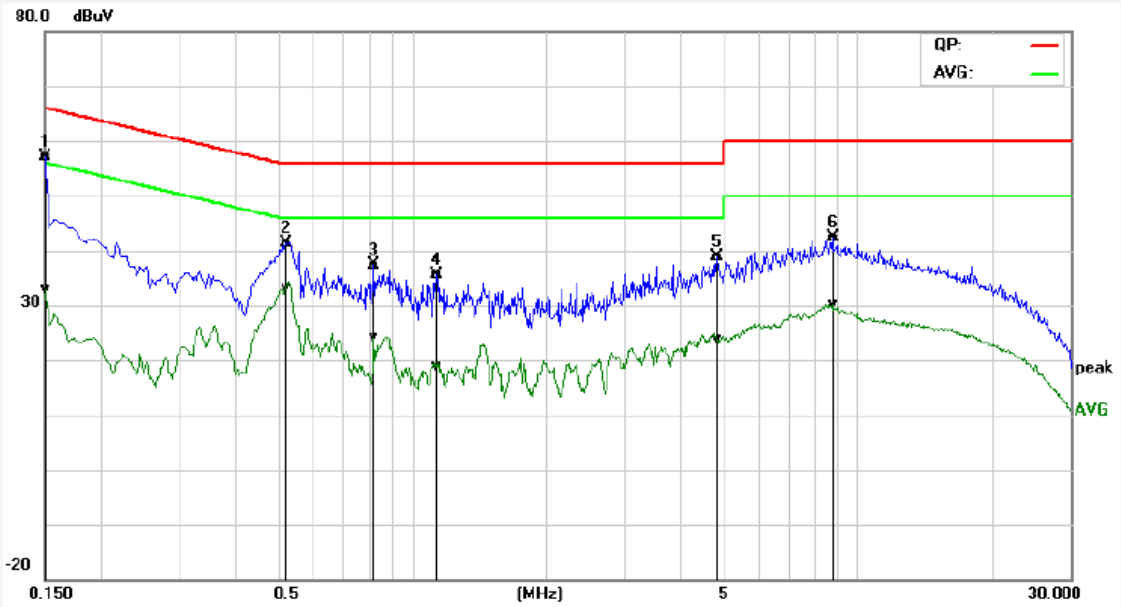

No.	Frequency (MHz)	QuasiPeak reading (dBuV)	Average reading (dBuV)	Correction factor (dB)	QuasiPeak result (dBuV)	Average result (dBuV)	QuasiPeak limit (dBuV)	Average limit (dBuV)	QuasiPeak margin (dB)	Average margin (dB)	Remark
1*	0.1500	47.50	23.22	9.66	57.16	32.88	65.99	56.00	-8.83	-23.12	Pass
2	0.5220	31.78	23.51	9.67	41.45	33.18	56.00	46.00	-14.55	-12.82	Pass
3	0.8260	27.81	14.40	9.69	37.50	24.09	56.00	46.00	-18.50	-21.91	Pass
4	1.1380	26.01	9.18	9.70	35.71	18.88	56.00	46.00	-20.29	-27.12	Pass
5	4.8380	28.97	14.17	9.80	38.77	23.97	56.00	46.00	-17.23	-22.03	Pass
6	8.8180	32.45	20.25	9.82	42.27	30.07	60.00	50.00	-17.73	-19.93	Pass

Model No.	SR1041D	**RBW,VBW**	9 kHz
Environmental Conditions	25.8℃/48%RH	**Test Mode**	Mode 1
Tested By	Luo Ping	**Line**	N
Tested Date	2020/10/22	**Test Voltage**	AC120V/60Hz

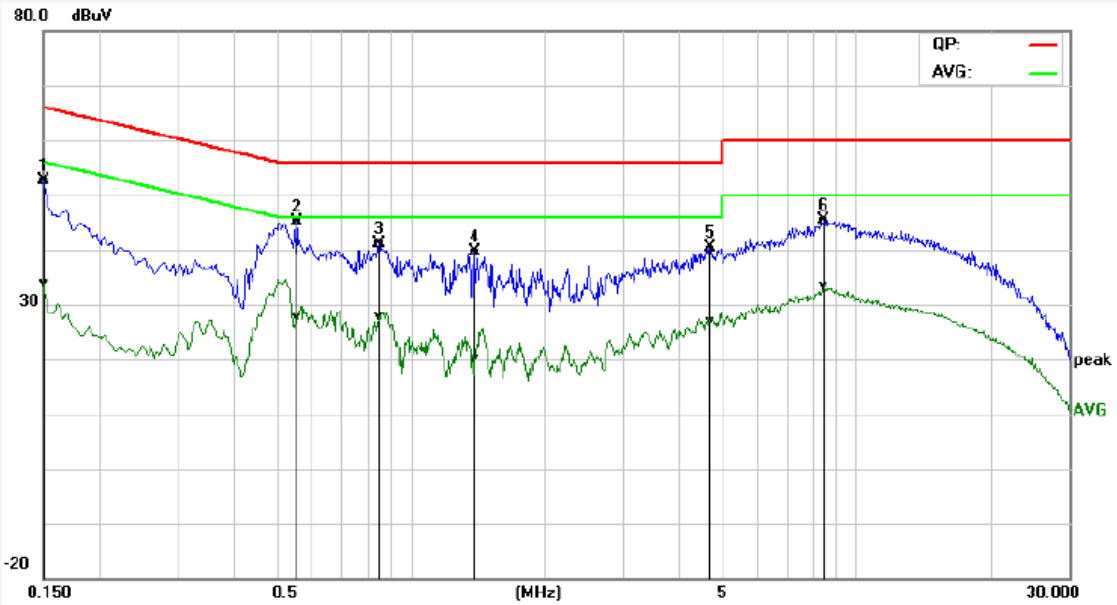

No.	Frequency (MHz)	QuasiPeak reading (dBuV)	Average reading (dBuV)	Correction factor (dB)	QuasiPeak result (dBuV)	Average result (dBuV)	QuasiPeak limit (dBuV)	Average limit (dBuV)	QuasiPeak margin (dB)	Average margin (dB)	Remark
1	0.1500	42.98	24.15	9.66	52.64	33.81	65.99	56.00	-13.35	-22.19	Pass
2*	0.5580	35.49	17.94	9.67	45.16	27.61	56.00	46.00	-10.84	-18.39	Pass
3	0.8500	31.51	18.11	9.69	41.20	27.80	56.00	46.00	-14.80	-18.20	Pass
4	1.3980	29.91	10.37	9.71	39.62	20.08	56.00	46.00	-16.38	-25.92	Pass
5	4.7180	30.45	17.01	9.80	40.25	26.81	56.00	46.00	-15.75	-19.19	Pass
6	8.4819	35.63	23.61	9.83	45.46	33.44	60.00	50.00	-14.54	-16.56	Pass

6. RADIATED SPURIOUS EMISSIONS

6.1. LIMITS

The maximum emissions outside of the frequency bands of operation shall be attenuated in accordance with the following limits:

(1) For transmitters operating in the 5.15-5.25 GHz band: All emissions outside of the 5.15-5.35 GHz band shall not exceed an e.i.r.p. of −27 dBm/MHz.

(2) For transmitters operating in the 5.25-5.35 GHz band: All emissions outside of the 5.15-5.35 GHz band shall not exceed an e.i.r.p. of −27 dBm/MHz.

(3) For transmitters operating in the 5.47-5.725 GHz band: All emissions outside of the 5.47-5.725 GHz band shall not exceed an e.i.r.p. of −27 dBm/MHz.

(4) For transmitters operating in the 5.725-5.85 GHz band:All emissions shall be limited to a level of −27 dBm/MHz at 75 MHz or more above or below the band edge increasing linearly to 10 dBm/MHz at 25 MHz above or below the band edge, and from 25 MHz above or below the band edge increasing linearly to a level of 15.6 dBm/MHz at 5 MHz above or below the band edge, and from 5 MHz above or below the band edge increasing linearly to a level of 27 dBm/MHz at the band edge.

The unwanted emissions which fall in Restricted bands shall not exceed the field strength levels specified in the following table:

15.209 Radiated emission limits

Frequency (MHz)	Field Strength(μV/m)	Distance(m)
0.009-0.490	2400/F(kHz)	300
0.490-1.705	24000/F(kHz)	30
1.705-30	30	30
30-88	100	3
88-216	150	3
216-960	200	3
Above 960	500	3

6.2. TEST PROCEDURES

a. EUT was placed on a turn table, which is 0.8 meter high above ground for below 1GHz test, and which is 1.5 meter high above ground for above 1GHz test.
b. EUT is set 3 meters away from the receiving antenna, which is mounted on a antenna tower.
c. Set the EUT transmit continuously with maximum output power.
d. The turn table can rotate 360 degrees to determine the position of the maximum emission level.
e. The antenna can be moved up and down between 1 meter and 4 meters to find out the maximum emission level. Both horizontal and vertical polarization of the antenna are set on test.
f. Spectrum analyzer setting parameters please see the below table.
g. Repeat above procedures until all channels were measured.
h. Record the results in the test report.

For 9KHz-150KHz

Spectrum Parameters	Setting
RBW	300Hz(for Peak&AVG)/CISPR 200Hz(for QP)
VBW	300Hz(for Peak&AVG)/CISPR 200Hz(for QP)
Start frequency	9KHz
Stop frequency	150KHz
Sweep Time	Auto
Detector	PEAK/QP/AVG
Trace Mode	Max Hold

Note : For 9KHz-90KHz&110KHz-150KHz,the detector is average,other frequency is CISPR QP detector.

For 150KHz-30MHz

Spectrum Parameters	Setting
RBW	9KHz
VBW	9KHz
Start frequency	150KHz
Stop frequency	30MHz
Sweep Time	Auto
Detector	QP
Trace Mode	Max Hold

Note : For 150KHz-490KHz,the detector is average,other frequency is CISPR QP detector.

For 30MHz-1GHz

Spectrum Parameters	Setting
RBW	120KHz
VBW	300KHz
Start frequency	30MHz
Stop frequency	1GHz
Sweep Time	Auto
Detector	QP
Trace Mode	Max Hold

For Above 1GHz

Spectrum Parameters	Setting	
RBW	1MHz	
VBW	PEAK Measurement	AVG Measurement
	3MHz	Duty cycle≥98%,VBW=10Hz Duty cycle＜98%,VBW≥1/T Video bandwidth mode=RMS (power averaging)
Start frequency	1GHz	
Stop frequency	40GHz	
Sweep Time	Auto	
Detector	PEAK	
Trace Mode	Max Hold	

Note : T is the on-time time of the duty cycle,when EUT transmit continuously with maximum output power,unit is seconds. reference section 2.7 for the on-time time.

Note : 18-40G Limit=74+20log(3/1)=83.54 (dBμV/m).

6.3. TEST SETUP

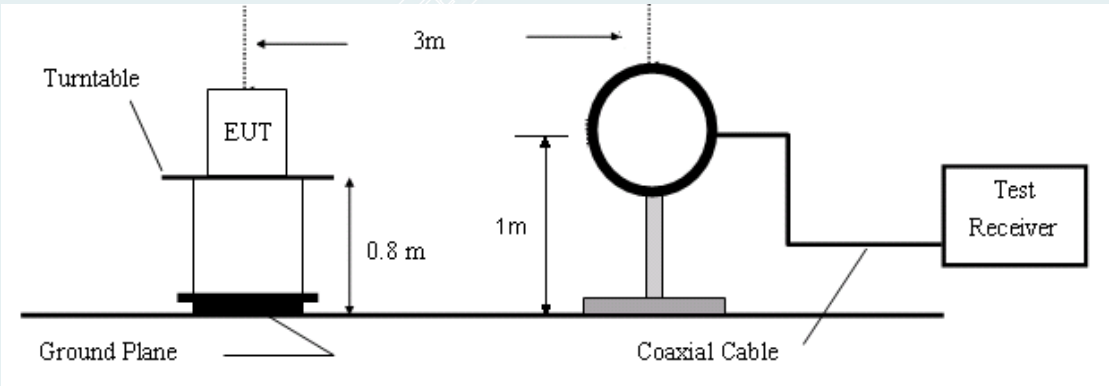

Figure 1. 9KHz to 30MHz radiated emissions test configuration

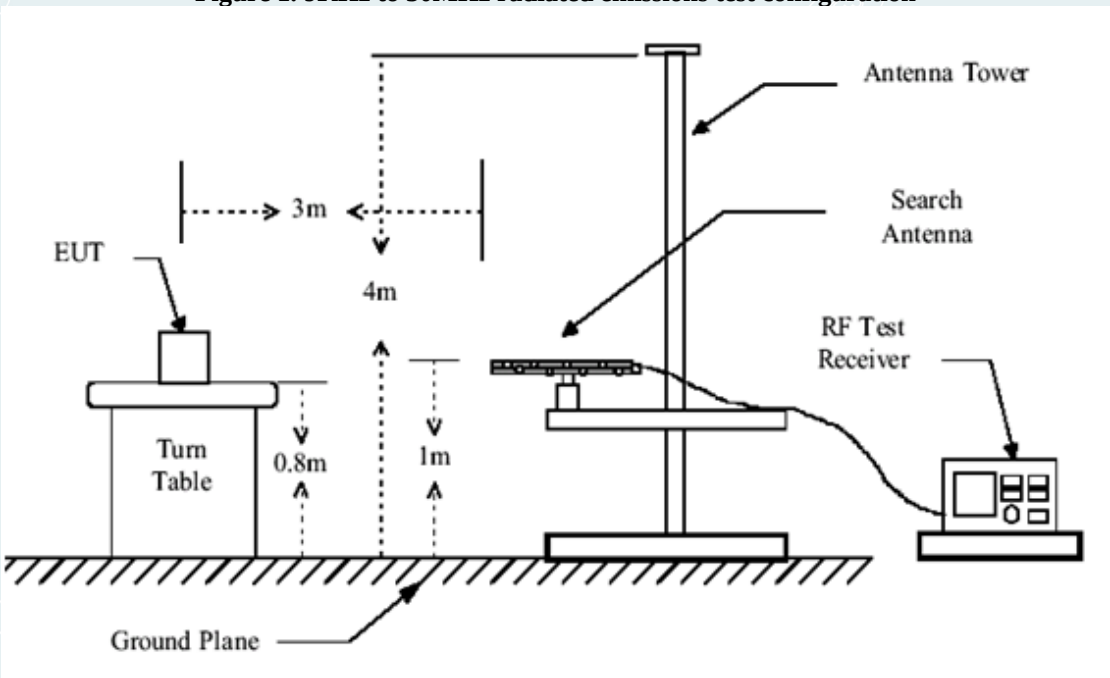

Figure 2. 30MHz to 1GHz radiated emissions test configuration

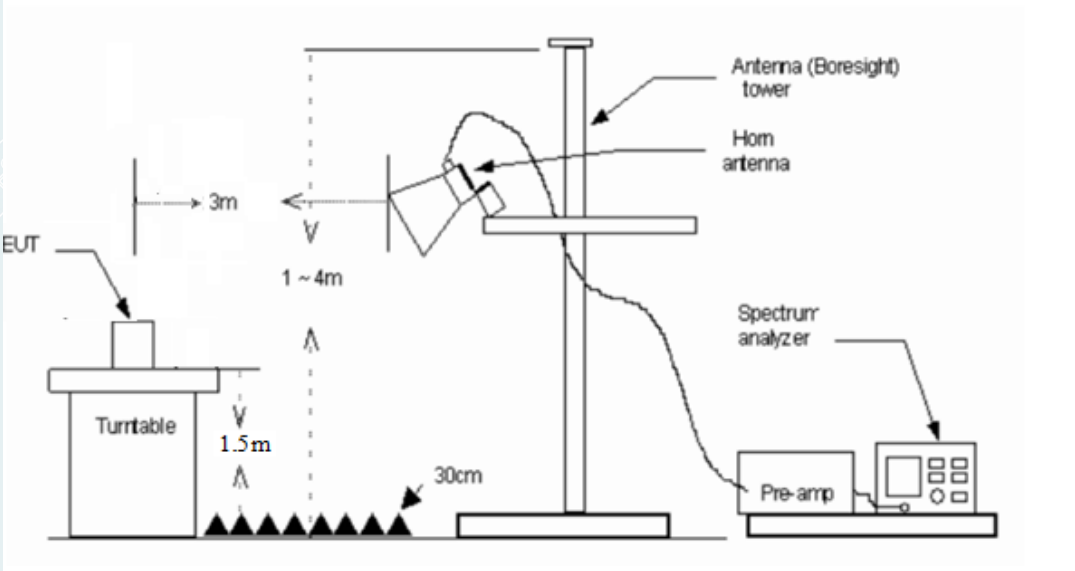

Figure 3. 1GHz to 18GHz radiated emissions test configuration

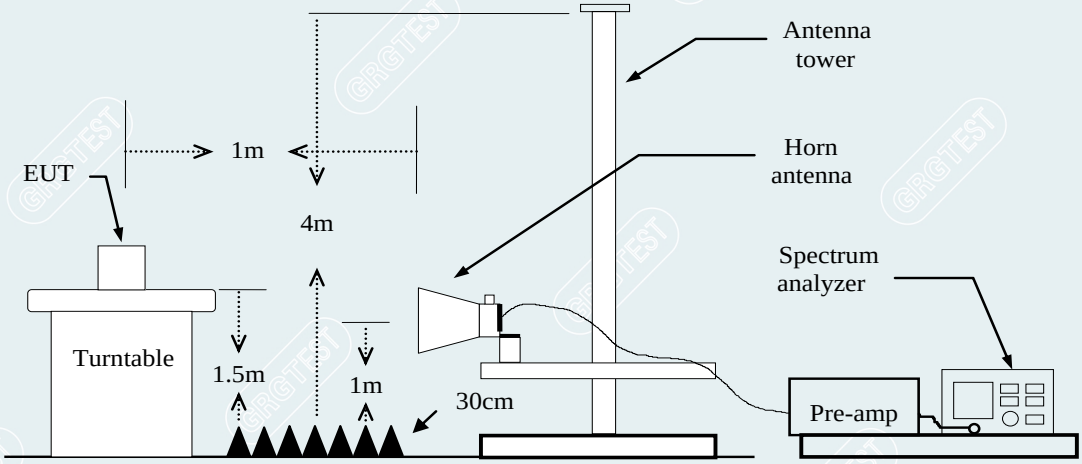

Figure 4. 18GHz to 40GHz radiated emissions test configuration

6.4. DATA SAMPLE

30MHz to 1GHz

No.	Frequency (MHz)	Reading (dBuV/m)	Level (dBuV/m)	Factor (dB)	Limit (dBuV/m)	Margin (dB)	Remark	Pole
xxx	xxx	37.06	-15.48	21.58	40.00	-18.42	QP	Vertical

1GHz to 18GHz

No.	Frequency (MHz)	Reading (dBuV/m)	Level (dBuV/m)	Factor (dB)	Limit (dBuV/m)	Margin (dB)	Remark	Pole
xxx	xxx	49.66	53.43	3.77	74.00	20.57	peak	Vertical
xxx	xxx	34.98	38.75	3.77	54.00	15.25	AVG	Vertical

18GHz to 40GHz

No.	Frequency (MHz)	Reading (dBuV/m)	Level (dBuV/m)	Factor (dB)	Limit (dBuV/m)	Margin (dB)	Remark	Pole
xxx	xxx	59.22	58.58	-0.64	83.54	24.96	peak	Vertical
xxx	xxx	53.01	52.37	-0.64	63.54	11.17	AVG	Vertical

Frequency (MHz) = Emission frequency in MHz

Ant.Pol. (H/V) = Antenna polarization

Reading (dBuV) = Uncorrected Analyzer / Receiver reading

Correction Factor (dB/m) = Antenna factor + Cable loss – Amplifier gain

Result (dBuV/m) = Reading (dBuV) + Correction Factor (dB/m)

Limit (dBuV/m) = Limit stated in standard

Margin (dB) = Remark Result (dBuV/m) – Limit (dBuV/m)

Peak = Peak Reading

QP = Quasi-peak Reading

AVG = Average Reading

6.5. TEST RESULTS

30MHz to 1GHz

Recorded the worst case results in this report (IEEE 802.11a)

Mode: TX/ IEEE 802.11a
channel (5180MHz) Date: 2020/11/09
Polarity Vertical

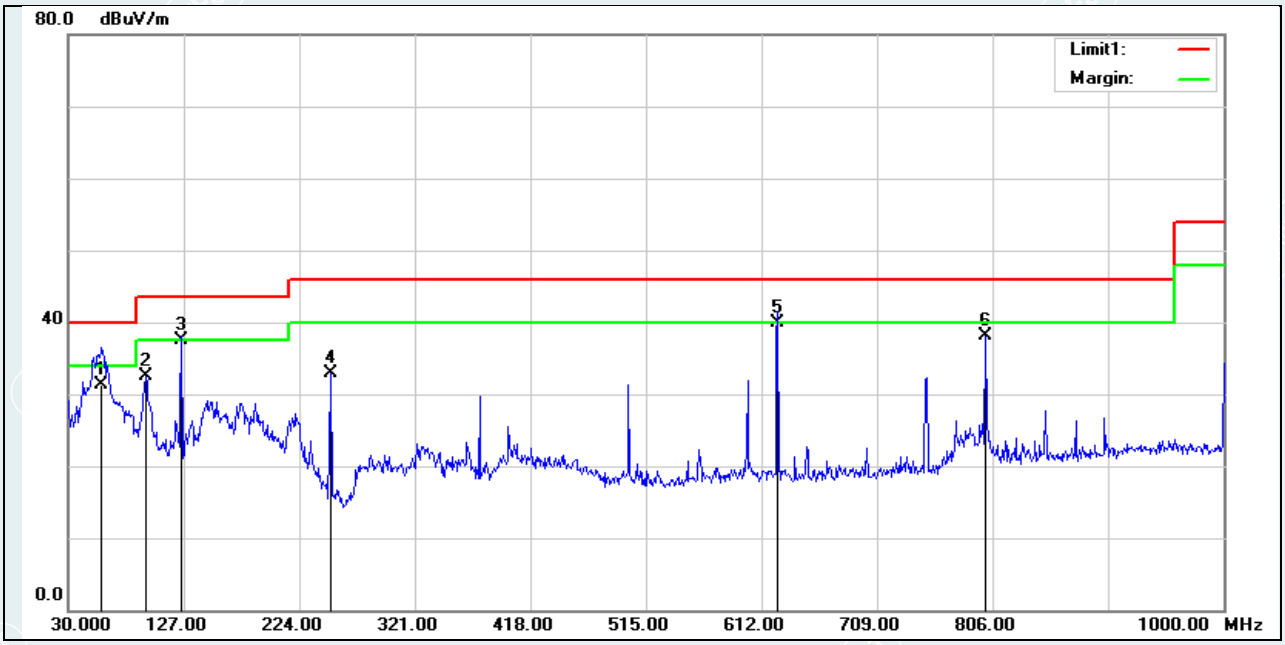

No.	Frequency (MHz)	Reading (dBuV)	Correct Factor(dB/m)	Result (dBuV/m)	Limit (dBuV/m)	Margin (dB)	Height (cm)	Degree (deg)	Remark
1	58.1300	60.08	-28.68	31.40	40.00	-8.60	100	266	QP
2	94.9900	62.43	-29.87	32.56	43.50	-10.94	100	295	QP
3*	125.0600	63.66	-26.16	37.50	43.50	-6.00	100	204	QP
4	250.1900	58.29	-25.37	32.92	46.00	-13.08	199	272	QP
5	625.5800	57.29	-17.39	39.90	46.00	-6.10	100	158	QP
6	800.1800	53.66	-15.48	38.18	46.00	-7.82	100	0	QP

Mode: TX/ IEEE 802.11a
channel (5180MHz) Date: 2020/11/09
Polarity Horizontal

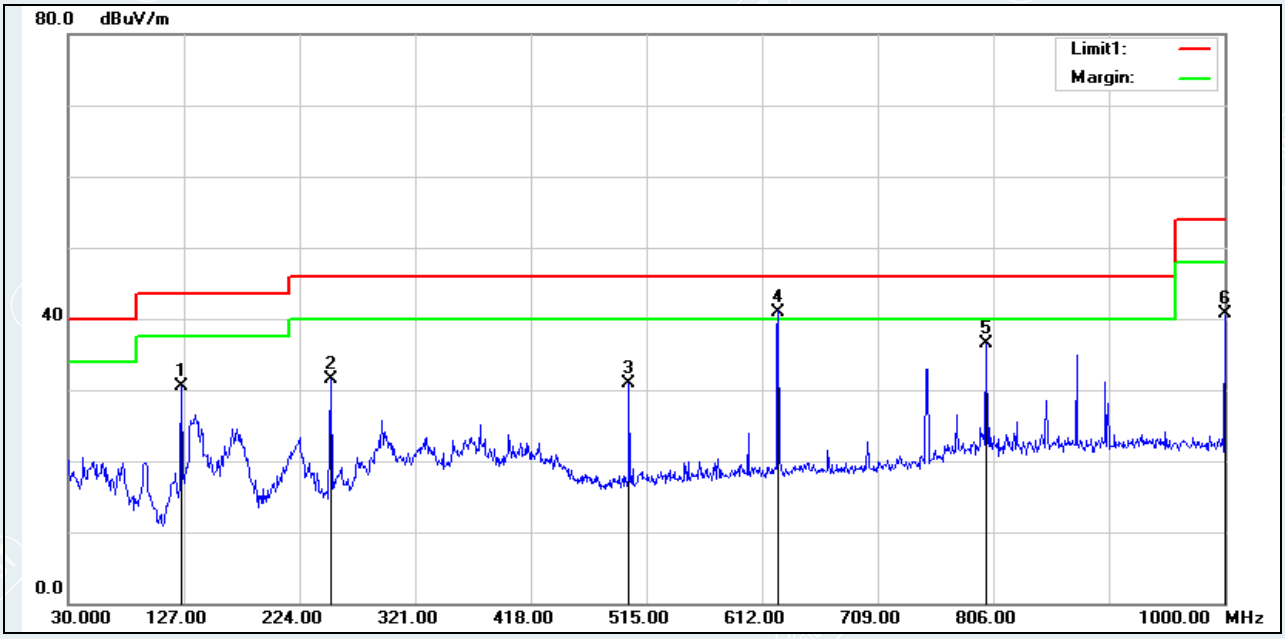

No.	Frequency (MHz)	Reading (dBuV)	Correct Factor(dB/m)	Result (dBuV/m)	Limit (dBuV/m)	Margin (dB)	Height (cm)	Degree (deg)	Remark
1	125.0600	56.61	-26.16	30.45	43.50	-13.05	299	184	QP
2	250.1900	56.95	-25.37	31.58	46.00	-14.42	101	360	QP
3	500.4500	50.22	-19.30	30.92	46.00	-15.08	199	36	QP
4*	625.5800	58.29	-17.39	40.90	46.00	-5.10	138	360	QP
5	800.1800	51.98	-15.48	36.50	46.00	-9.50	100	169	QP
6	1000.0000	54.66	-14.04	40.62	54.00	-13.38	100	317	QP

No-Beamforming
1 GHz to 18GHz
Recorded the worst case results in this report
Mode: TX / IEEE 802.11a (antenna 1)
channel (5180MHz) Date: 2020/11/17

Suspected Data List									
NO.	Freq. [MHz]	Reading [dBμV/m]	Level [dBμV/m]	Factor [dB]	Limit [dBμV/m]	Margin [dB]	Height [cm]	Angle [°]	Polarity
1	5182.0000	88.27	103.12	14.85	68.30	-34.82	150	50	Horizontal
2	6842.8000	36.95	56.82	19.87	68.30	11.48	150	146	Horizontal
3	10356.1000	50.74	54.90	4.16	68.30	13.40	150	360	Horizontal
4	12931.2000	40.08	48.15	8.07	68.30	20.15	150	231	Horizontal
5	15539.3000	49.03	58.37	9.34	74.00	15.63	150	15	Horizontal
6	18000.0000	38.61	61.38	22.77	74.00	12.62	150	189	Horizontal

PK Final Data List					
NO.	Freq. [MHz]	Factor [dB]	Height [cm]	Angle [°]	Polarity
1	15532.3272	9.34	136	356.4	Horizontal
2	18000.0000	22.77	150	189	Horizontal

AV Final Data List									
NO.	Freq. [MHz]	Factor [dB]	AV Reading [dBμV/m]	AV Value [dBμV/m]	AV Limit [dBμV/m]	AV Margin [dB]	Height [cm]	Angle [°]	Polarity
1	15532.3272	9.34	28.33	37.67	54.00	16.33	136	356.4	Horizontal
2	18000.0000	22.77	24.87	47.64	54.00	6.36	150	189	Horizontal

Suspected Data List									
NO.	Freq. [MHz]	Reading [dBμV/m]	Level [dBμV/m]	Factor [dB]	Limit [dBμV/m]	Margin [dB]	Height [cm]	Angle [°]	Polarity
1	2400.4000	41.43	48.48	7.05	68.30	19.82	150	40	Vertical
2	5176.0000	96.88	111.73	14.85	68.30	-43.43	150	338	Vertical
3	6734.2000	37.26	56.85	19.59	68.30	11.45	150	215	Vertical
4	10357.2000	55.14	59.31	4.17	68.30	8.99	150	84	Vertical
5	15539.3000	54.58	63.92	9.34	74.00	10.08	150	120	Vertical
6	17962.6000	37.60	59.81	22.21	74.00	14.19	150	248	Vertical

PK Final Data List					
NO.	Freq. [MHz]	Factor [dB]	Height [cm]	Angle [°]	Polarity
1	15560.4673	9.34	135	356.2	Vertical
2	17962.6000	22.21	150	248	Vertical

AV Final Data List									
NO.	Freq. [MHz]	Factor [dB]	AV Reading [dBμV/m]	AV Value [dBμV/m]	AV Limit [dBμV/m]	AV Margin [dB]	Height [cm]	Angle [°]	Polarity
1	15560.4673	9.34	30.71	40.05	54.00	13.95	135	356.2	Vertical
2	17962.6000	22.21	24.76	46.97	54.00	7.03	150	248	Vertical

Mode: TX / IEEE 802.11a (antenna 1)
channel (5200MHz) Date: 2020/11/17

Suspected Data List									
NO.	Freq. [MHz]	Reading [dBμV/m]	Level [dBμV/m]	Factor [dB]	Limit [dBμV/m]	Margin [dB]	Height [cm]	Angle [°]	Polarity
1	2428.6000	41.99	48.54	6.55	68.30	19.76	150	136	Horizontal
2	5195.8000	88.21	103.08	14.87	68.30	-34.78	150	51	Horizontal
3	6841.6000	37.05	56.93	19.88	68.30	11.37	150	353	Horizontal
4	10403.4000	50.48	54.76	4.28	68.30	13.54	150	160	Horizontal
5	15607.5000	48.67	57.97	9.30	74.00	16.03	150	337	Horizontal
6	17995.6000	37.72	60.42	22.70	74.00	13.58	150	309	Horizontal

PK Final Data List					
NO.	Freq. [MHz]	Factor [dB]	Height [cm]	Angle [°]	Polarity
1	15607.5000	9.30	150	337	Horizontal
2	17995.6000	22.70	150	309	Horizontal

AV Final Data List									
NO.	Freq. [MHz]	Factor [dB]	AV Reading [dBμV/m]	AV Value [dBμV/m]	AV Limit [dBμV/m]	AV Margin [dB]	Height [cm]	Angle [°]	Polarity
1	15607.5000	9.30	30.05	39.35	54.00	23.95	150	337	Horizontal
2	17995.6000	22.70	24.83	47.53	54.00	29.17	150	309	Horizontal

Suspected Data List									
NO.	Freq. [MHz]	Reading [dBμV/m]	Level [dBμV/m]	Factor [dB]	Limit [dBμV/m]	Margin [dB]	Height [cm]	Angle [°]	Polarity
1	2396.8000	41.20	48.19	6.99	68.30	20.11	150	2	Vertical
2	5201.8000	96.33	111.23	14.90	68.30	-42.93	150	334	Vertical
3	6941.2000	37.46	57.11	19.65	68.30	11.19	150	283	Vertical
4	10401.2000	57.54	61.81	4.27	68.30	6.49	150	94	Vertical
5	15607.5000	52.38	61.68	9.30	74.00	12.32	150	121	Vertical
6	18000.0000	37.11	59.88	22.77	74.00	14.12	150	42	Vertical

PK Final Data List					
NO.	Freq. [MHz]	Factor [dB]	Height [cm]	Angle [°]	Polarity
1	15577.2355	9.30	135	356.4	Vertical
2	18000.0000	22.77	150	42	Vertical

AV Final Data List									
NO.	Freq. [MHz]	Factor [dB]	AV Reading [dBμV/m]	AV Value [dBμV/m]	AV Limit [dBμV/m]	AV Margin [dB]	Height [cm]	Angle [°]	Polarity
1	15577.2355	9.30	30.10	39.40	54.00	14.60	135	356.4	Vertical
2	18000.0000	22.77	25.19	47.96	54.00	6.04	150	42	Vertical

Mode: TX / IEEE 802.11a (antenna 1)
channel (5240MHz) Date: 2020/11/17

Suspected Data List									
NO.	Freq. [MHz]	Reading [dBμV/m]	Level [dBμV/m]	Factor [dB]	Limit [dBμV/m]	Margin [dB]	Height [cm]	Angle [°]	Polarity
1	2394.4000	41.55	48.49	6.94	68.30	19.81	150	238	Horizontal
2	5242.0000	87.64	103.02	15.38	68.30	-34.72	150	52	Horizontal
3	6988.0000	37.16	56.73	19.57	68.30	11.57	150	308	Horizontal
4	10476.0000	50.78	55.43	4.65	68.30	12.87	150	358	Horizontal
5	15726.3000	48.16	57.42	9.26	74.00	16.58	150	23	Horizontal
6	17939.5000	37.72	59.59	21.87	74.00	14.41	150	342	Horizontal

PK Final Data List					
NO.	Freq. [MHz]	Factor [dB]	Height [cm]	Angle [°]	Polarity
1	15804.9315	9.26	100	356.3	Horizontal
2	17939.5000	21.87	150	342	Horizontal

AV Final Data List									
NO.	Freq. [MHz]	Factor [dB]	AV Reading [dBμV/m]	AV Value [dBμV/m]	AV Limit [dBμV/m]	AV Margin [dB]	Height [cm]	Angle [°]	Polarity
1	15804.9315	9.26	27.59	36.85	54.00	17.15	100	356.3	Horizontal
2	17939.5000	21.87	26.10	47.97	54.00	6.03	150	342	Horizontal

Suspected Data List									
NO.	Freq. [MHz]	Reading [dBμV/m]	Level [dBμV/m]	Factor [dB]	Limit [dBμV/m]	Margin [dB]	Height [cm]	Angle [°]	Polarity
1	2398.0000	40.86	47.88	7.02	68.30	20.42	150	57	Vertical
2	5233.6000	96.40	111.68	15.28	68.30	-43.38	150	334	Vertical
3	6814.0000	37.09	57.04	19.95	68.30	11.26	150	0	Vertical
4	10481.5000	56.65	61.33	4.68	68.30	6.97	150	84	Vertical
5	15721.9000	54.20	63.48	9.28	74.00	10.52	150	119	Vertical
6	17958.2000	37.95	60.10	22.15	74.00	13.9	150	344	Vertical

PK Final Data List					
NO.	Freq. [MHz]	Factor [dB]	Height [cm]	Angle [°]	Polarity
1	15800.5095	9.27	100	356.2	Vertical
2	17958.2000	22.15	150	344	Vertical

AV Final Data List									
NO.	Freq. [MHz]	Factor [dB]	AV Reading [dBμV/m]	AV Value [dBμV/m]	AV Limit [dBμV/m]	AV Margin [dB]	Height [cm]	Angle [°]	Polarity
1	15800.5095	9.27	28.26	37.53	54.00	16.47	100	356.2	Vertical
2	17958.2000	22.15	25.31	47.46	54.00	6.54	150	344	Vertical

Mode: TX / IEEE 802.11a (antenna 1)
channel (5260MHz) Date: 2020/11/17

Suspected Data List									
NO.	Freq. [MHz]	Reading [dBμV/m]	Level [dBμV/m]	Factor [dB]	Limit [dBμV/m]	Margin [dB]	Height [cm]	Angle [°]	Polarity
1	2764.6000	42.53	48.60	6.07	68.30	19.7	150	180	Horizontal
2	5263.0000	84.53	100.15	15.62	68.30	-31.85	150	53	Horizontal
3	6995.8000	37.80	57.36	19.56	68.30	10.94	150	192	Horizontal
4	10522.2000	49.15	54.03	4.88	68.30	14.27	150	360	Horizontal
5	15781.3000	46.64	55.62	8.98	74.00	18.38	150	335	Horizontal
6	17985.7000	37.47	60.03	22.56	74.00	13.97	150	280	Horizontal

PK Final Data List					
NO.	Freq. [MHz]	Factor [dB]	Height [cm]	Angle [°]	Polarity
1	15766.8844	8.98	200	356.4	Horizontal
2	17985.7000	22.56	150	280	Horizontal

AV Final Data List									
NO.	Freq. [MHz]	Factor [dB]	AV Reading [dBμV/m]	AV Value [dBμV/m]	AV Limit [dBμV/m]	AV Margin [dB]	Height [cm]	Angle [°]	Polarity
1	15766.8844	8.98	27.60	36.58	54.00	17.42	200	356.4	Horizontal
2	17985.7000	22.56	24.12	46.68	54.00	7.32	150	280	Horizontal

Suspected Data List									
NO.	Freq. [MHz]	Reading [dBμV/m]	Level [dBμV/m]	Factor [dB]	Limit [dBμV/m]	Margin [dB]	Height [cm]	Angle [°]	Polarity
1	2398.6000	41.27	48.30	7.03	68.30	20	150	115	Vertical
2	5263.6000	93.82	109.45	15.63	68.30	-41.15	150	334	Vertical
3	6808.0000	37.42	57.39	19.97	68.30	10.91	150	174	Vertical
4	10523.300	53.40	58.29	4.89	68.30	10.01	150	86	Vertical
5	15782.400	47.87	56.84	8.97	74.00	17.16	150	125	Vertical
6	17995.600	37.05	59.75	22.70	74.00	14.25	150	106	Vertical

PK Final Data List					
NO.	Freq. [MHz]	Factor [dB]	Height [cm]	Angle [°]	Polarity
1	15846.8954	8.97	100	356.2	Vertical
2	17995.6000	22.70	150	106	Vertical

AV Final Data List									
NO.	Freq. [MHz]	Factor [dB]	AV Reading [dBμV/m]	AV Value [dBμV/m]	AV Limit [dBμV/m]	AV Margin [dB]	Height [cm]	Angle [°]	Polarity
1	15846.895	8.97	27.61	36.58	54.00	17.42	100	356.2	Vertical
2	17995.600	22.70	24.85	47.55	54.00	6.45	150	106	Vertical

Mode: TX / IEEE 802.11a (antenna 1)
channel (5300MHz) Date: 2020/11/17

Suspected Data List									
NO.	Freq. [MHz]	Reading [dBμV/m]	Level [dBμV/m]	Factor [dB]	Limit [dBμV/m]	Margin [dB]	Height [cm]	Angle [°]	Polarity
1	1760.5000	44.19	47.71	3.52	68.30	20.59	100	260	Horizontal
2	2404.3000	42.75	49.73	6.98	68.30	18.57	100	283	Horizontal
3	5304.7000	85.59	101.64	16.05	68.30	-33.34	200	51	Horizontal
4	10600.8500	55.53	60.80	5.27	74.00	13.20	100	136	Horizontal
5	15906.7000	44.61	53.67	9.06	74.00	20.33	100	77	Horizontal
6	17972.5000	38.91	61.27	22.36	74.00	12.73	200	245	Horizontal

PK Final Data List					
NO.	Freq. [MHz]	Factor [dB]	Height [cm]	Angle [°]	Polarity
1	10600.0019	5.27	173	78.4	Horizontal
2	15894.6109	9.06	124	28	Horizontal
3	17972.5000	22.36	200	245	Horizontal

AV Final Data List									
NO.	Freq. [MHz]	Factor [dB]	AV Reading [dBμV/m]	AV Value [dBμV/m]	AV Limit [dBμV/m]	AV Margin [dB]	Height [cm]	Angle [°]	Polarity
1	10600.0019	5.27	39.54	44.81	54.00	9.19	173	78.4	Horizontal
2	15894.6109	9.06	26.55	35.61	54.00	18.39	124	28	Horizontal
3	17972.5000	22.36	25.89	48.25	54.00	5.75	200	245	Horizontal

Suspected Data List									
NO.	Freq. [MHz]	Reading [dBμV/m]	Level [dBμV/m]	Factor [dB]	Limit [dBμV/m]	Margin [dB]	Height [cm]	Angle [°]	Polarity
1	1752.7000	44.37	47.84	3.47	68.30	20.46	100	212	Vertical
2	2979.7000	42.67	49.61	6.94	68.30	18.69	100	283	Vertical
3	5305.3000	92.07	108.12	16.05	68.30	-39.82	200	271	Vertical
4	10594.2500	60.99	66.23	5.24	68.30	2.07	100	239	Vertical
5	15901.2000	46.70	55.76	9.06	74.00	18.24	200	124	Vertical
6	17987.9000	38.71	61.30	22.59	74.00	12.70	200	331	Vertical

PK Final Data List					
NO.	Freq. [MHz]	Factor [dB]	Height [cm]	Angle [°]	Polarity
1	10600.1828	5.25	113	23.4	Vertical
2	15898.9738	9.06	175	327.7	Vertical
3	17987.9000	22.59	200	331	Vertical

AV Final Data List									
NO.	Freq. [MHz]	Factor [dB]	AV Reading [dBμV/m]	AV Value [dBμV/m]	AV Limit [dBμV/m]	AV Margin [dB]	Height [cm]	Angle [°]	Polarity
1	10600.1828	5.25	43.63	48.88	54.00	5.12	113	23.4	Vertical
2	15898.9738	9.06	31.06	40.12	54.00	13.88	175	327.7	Vertical
3	17987.9000	22.59	25.16	47.75	54.00	6.25	200	331	Vertical

Mode: TX / IEEE 802.11a (antenna 1)
channel (5320MHz) Date: 2020/11/17

Suspected Data List									
NO.	Freq. [MHz]	Reading [dBμV/m]	Level [dBμV/m]	Factor [dB]	Limit [dBμV/m]	Margin [dB]	Height [cm]	Angle [°]	Polarity
1	2414.8000	41.50	48.29	6.79	68.30	20.01	150	326	Horizontal
2	5316.4000	84.81	100.85	16.04	68.30	-32.55	150	47	Horizontal
3	6819.4000	37.51	57.45	19.94	68.30	10.85	150	35	Horizontal
4	10641.0000	49.31	54.46	5.15	74.00	19.54	150	360	Horizontal
5	15960.6000	47.89	56.93	9.04	74.00	17.07	150	334	Horizontal
6	17953.8000	38.19	60.27	22.08	74.00	13.73	150	219	Horizontal

PK Final Data List					
NO.	Freq. [MHz]	Factor [dB]	Height [cm]	Angle [°]	Polarity
1	10641.3411	5.15	182	356.4	Horizontal
2	15946.0206	9.03	135	356.4	Horizontal
3	17953.8000	22.08	150	219	Horizontal

AV Final Data List									
NO.	Freq. [MHz]	Factor [dB]	AV Reading [dBμV/m]	AV Value [dBμV/m]	AV Limit [dBμV/m]	AV Margin [dB]	Height [cm]	Angle [°]	Polarity
1	10641.3411	5.15	41.26	46.41	54.00	7.59	182	356.4	Horizontal
2	15946.0206	9.03	27.40	36.43	54.00	17.57	135	356.4	Horizontal
3	17953.8000	22.08	24.75	46.83	54.00	7.17	150	219	Horizontal

Suspected Data List									
NO.	Freq. [MHz]	Reading [dBμV/m]	Level [dBμV/m]	Factor [dB]	Limit [dBμV/m]	Margin [dB]	Height [cm]	Angle [°]	Polarity
1	2395.6000	41.16	48.13	6.97	68.30	20.17	150	228	Vertical
2	5318.2000	94.37	110.41	16.04	68.30	-42.11	150	334	Vertical
3	6819.4000	34.86	54.80	19.94	68.30	13.5	150	197	Vertical
4	10636.6000	53.40	58.56	5.16	74.00	15.44	150	86	Vertical
5	15951.8000	51.90	60.94	9.04	74.00	13.06	150	122	Vertical
6	17970.3000	37.36	59.69	22.33	74.00	14.31	150	346	Vertical

PK Final Data List					
NO.	Freq. [MHz]	Factor [dB]	Height [cm]	Angle [°]	Polarity
1	10641.0319	5.16	100	356.4	Vertical
2	15995.2584	9.04	100	356.4	Vertical
3	17970.3000	22.33	150	346	Vertical

AV Final Data List									
NO.	Freq. [MHz]	Factor [dB]	AV Reading [dBμV/m]	AV Value [dBμV/m]	AV Limit [dBμV/m]	AV Margin [dB]	Height [cm]	Angle [°]	Polarity
1	10641.0319	5.16	35.91	41.07	54.00	12.93	100	356.4	Vertical
2	15995.2584	9.04	27.24	36.28	54.00	17.72	100	356.4	Vertical
3	17970.3000	22.33	25.52	47.85	54.00	6.15	150	346	Vertical

Mode: TX / IEEE 802.11a (antenna 1)
channel (5500MHz) Date: 2020/11/17

Suspected Data List									
NO.	Freq. [MHz]	Reading [dBμV/m]	Level [dBμV/m]	Factor [dB]	Limit [dBμV/m]	Margin [dB]	Height [cm]	Angle [°]	Polarity
1	2393.1250	41.20	48.11	6.91	68.30	20.19	150	278	Horizontal
2	2500.0000	44.44	49.70	5.26	74.00	24.3	150	7	Horizontal
3	5498.1250	83.17	99.28	16.11	68.30	-30.98	150	290	Horizontal
4	6743.1250	37.15	56.79	19.64	68.30	11.51	150	212	Horizontal
5	10993.0000	48.71	54.89	6.18	74.00	19.11	150	70	Horizontal
6	17996.5625	38.41	61.13	22.72	74.00	12.87	150	225	Horizontal

PK Final Data List					
NO.	Freq. [MHz]	Factor [dB]	Height [cm]	Angle [°]	Polarity
1	2500.0000	5.26	150	3.8	Horizontal
2	11011.6740	6.18	150	3.6	Horizontal
3	17971.4478	22.72	150	3.8	Horizontal

AV Final Data List									
NO.	Freq. [MHz]	Factor [dB]	AV Reading [dBμV/m]	AV Value [dBμV/m]	AV Limit [dBμV/m]	AV Margin [dB]	Height [cm]	Angle [°]	Polarity
1	2500.0000	5.26	40.08	45.34	54.00	8.66	150	3.8	Horizontal
2	11011.6740	6.18	31.62	37.80	54.00	16.20	150	3.6	Horizontal
3	17971.4478	22.72	25.03	47.75	54.00	6.25	150	3.8	Horizontal

Suspected Data List									
NO.	Freq. [MHz]	Reading [dBμV/m]	Level [dBμV/m]	Factor [dB]	Limit [dBμV/m]	Margin [dB]	Height [cm]	Angle [°]	Polarity
1	2500.0000	44.13	49.39	5.26	74.00	24.61	150	250	Vertical
2	5496.2500	93.73	109.83	16.10	68.30	-41.53	150	320	Vertical
3	6991.0000	37.46	57.03	19.57	68.30	11.27	150	133	Vertical
4	11000.5625	52.67	58.89	6.22	74.00	15.11	150	213	Vertical
5	16501.9375	46.72	55.98	9.26	68.30	12.32	150	105	Vertical
6	17951.1875	39.62	61.66	22.04	74.00	12.34	150	80	Vertical

PK Final Data List					
NO.	Freq. [MHz]	Factor [dB]	Height [cm]	Angle [°]	Polarity
1	2499.9399	5.26	150	287.3	Vertical
2	11000.0336	6.22	150	29.9	Vertical
3	17992.0380	22.04	150	3.6	Vertical

AV Final Data List									
NO.	Freq. [MHz]	Factor [dB]	AV Reading [dBμV/m]	AV Value [dBμV/m]	AV Limit [dBμV/m]	AV Margin [dB]	Height [cm]	Angle [°]	Polarity
1	2499.9399	5.26	34.69	39.95	54.00	14.05	150	287.3	Vertical
2	11000.0336	6.22	40.19	46.41	54.00	7.59	150	29.9	Vertical
3	17992.0380	22.04	24.25	46.29	54.00	7.71	150	3.6	Vertical

Mode: TX / IEEE 802.11a (antenna 1)
channel (5580MHz) Date: 2020/11/17

Suspected Data List									
NO.	Freq. [MHz]	Reading [dBμV/m]	Level [dBμV/m]	Factor [dB]	Limit [dBμV/m]	Margin [dB]	Height [cm]	Angle [°]	Polarity
1	1737.4000	43.19	46.57	3.38	68.30	21.73	200	208	Horizontal
2	2443.6000	45.63	51.91	6.28	68.30	16.39	200	293	Horizontal
3	5587.6000	80.90	97.06	16.16	68.30	-28.76	200	293	Horizontal
4	11162.9500	47.02	53.52	6.50	74.00	20.48	200	247	Horizontal
5	14590.0000	39.89	50.93	11.04	68.30	17.37	100	105	Horizontal
6	17998.3500	39.44	62.19	22.75	74.00	11.81	100	194	Horizontal

PK Final Data List					
NO.	Freq. [MHz]	Factor [dB]	Height [cm]	Angle [°]	Polarity
1	11160.0476	6.50	187	240.2	Horizontal
2	17967.0630	22.75	173	197.6	Horizontal

AV Final Data List									
NO.	Freq. [MHz]	Factor [dB]	AV Reading [dBμV/m]	AV Value [dBμV/m]	AV Limit [dBμV/m]	AV Margin [dB]	Height [cm]	Angle [°]	Polarity
1	11160.0476	6.50	34.95	41.45	54.00	12.55	187	240.2	Horizontal
2	17967.0630	22.75	25.79	48.54	54.00	5.46	173	197.6	Horizontal

Suspected Data List									
NO.	Freq. [MHz]	Reading [dBμV/m]	Level [dBμV/m]	Factor [dB]	Limit [dBμV/m]	Margin [dB]	Height [cm]	Angle [°]	Polarity
1	1220.8000	45.10	45.86	0.76	74.00	28.14	200	154	Vertical
2	2433.1000	44.26	50.72	6.46	68.30	17.58	200	77	Vertical
3	3843.7000	42.16	51.17	9.01	74.00	22.83	200	256	Vertical
4	5587.0000	89.37	105.53	16.16	68.30	-37.23	200	262	Vertical
5	11148.6500	52.11	58.56	6.45	74.00	15.44	100	236	Vertical
6	17972.5000	39.65	62.01	22.36	74.00	11.99	200	92	Vertical

PK Final Data List					
NO.	Freq. [MHz]	Factor [dB]	Height [cm]	Angle [°]	Polarity
1	3840.4329	9.01	200	8.7	Vertical
2	11160.0216	6.45	125	27.5	Vertical
3	17972.5000	22.36	200	92	Vertical

AV Final Data List									
NO.	Freq. [MHz]	Factor [dB]	AV Reading [dBμV/m]	AV Value [dBμV/m]	AV Limit [dBμV/m]	AV Margin [dB]	Height [cm]	Angle [°]	Polarity
1	3840.4329	9.01	26.82	35.83	54.00	18.17	200	8.7	Vertical
2	11160.0216	6.45	37.03	43.48	54.00	10.52	125	27.5	Vertical
3	17972.5000	22.36	25.64	48.00	54.00	6.00	200	92	Vertical

Mode: TX / IEEE 802.11a (antenna 1)
channel (5700MHz) Date: 2020/11/17

Suspected Data List									
NO.	Freq. [MHz]	Reading [dBμV/m]	Level [dBμV/m]	Factor [dB]	Limit [dBμV/m]	Margin [dB]	Height [cm]	Angle [°]	Polarity
1	2500.0000	43.90	49.16	5.26	74.00	24.84	150	3	Horizontal
2	5701.7500	84.63	100.87	16.24	68.30	-32.57	150	163	Horizontal
3	6986.5000	38.57	58.14	19.57	68.30	10.16	150	189	Horizontal
4	11401.3750	45.75	52.27	6.52	74.00	21.73	150	340	Horizontal
5	17106.2500	40.53	52.26	11.73	68.30	16.04	150	242	Horizontal
6	17980.0625	37.43	59.90	22.47	74.00	14.1	150	242	Horizontal

PK Final Data List					
NO.	Freq. [MHz]	Factor [dB]	Height [cm]	Angle [°]	Polarity
1	2500.0000	5.26	150	3	Horizontal
2	11427.3204	6.52	150	3.6	Horizontal
3	17967.4400	22.47	150	3.6	Horizontal

AV Final Data List									
NO.	Freq. [MHz]	Factor [dB]	AV Reading [dBμV/m]	AV Value [dBμV/m]	AV Limit [dBμV/m]	AV Margin [dB]	Height [cm]	Angle [°]	Polarity
1	2500.0000	5.26	39.16	44.42	54.00	9.58	150	3	Horizontal
2	11427.3204	6.52	30.65	37.17	54.00	16.83	150	3.6	Horizontal
3	17967.4400	22.47	24.84	47.31	54.00	6.69	150	3.6	Horizontal

Suspected Data List									
NO.	Freq. [MHz]	Reading [dBμV/m]	Level [dBμV/m]	Factor [dB]	Limit [dBμV/m]	Margin [dB]	Height [cm]	Angle [°]	Polarity
1	2500.0000	43.52	48.78	5.26	74.00	25.22	150	229	Vertical
2	5693.5000	93.93	110.15	16.22	68.30	-41.85	150	272	Vertical
3	6739.0000	37.62	57.24	19.62	68.30	11.06	150	195	Vertical
4	11397.2500	48.67	55.19	6.52	74.00	18.81	150	230	Vertical
5	17107.6250	42.80	54.53	11.73	68.30	13.77	150	94	Vertical
6	17960.8125	37.12	59.31	22.19	74.00	14.69	150	315	Vertical

PK Final Data List					
NO.	Freq. [MHz]	Factor [dB]	Height [cm]	Angle [°]	Polarity
1	2499.9599	5.26	150	286.6	Vertical
2	11399.8984	6.52	150	27.7	Vertical
3	17979.7077	22.18	150	3.6	Vertical

AV Final Data List									
NO.	Freq. [MHz]	Factor [dB]	AV Reading [dBμV/m]	AV Value [dBμV/m]	AV Limit [dBμV/m]	AV Margin [dB]	Height [cm]	Angle [°]	Polarity
1	2499.9599	5.26	35.05	40.31	54.00	13.69	150	286.6	Vertical
2	11399.8984	6.52	36.60	43.12	54.00	10.88	150	27.7	Vertical
3	17979.7077	22.18	24.60	46.78	54.00	7.22	150	3.6	Vertical

Mode: TX / IEEE 802.11a (antenna 1)
channel (5745MHz) Date: 2020/11/17

Suspected Data List									
NO.	Freq. [MHz]	Reading [dBμV/m]	Level [dBμV/m]	Factor [dB]	Limit [dBμV/m]	Margin [dB]	Height [cm]	Angle [°]	Polarity
1	2412.6250	42.19	49.02	6.83	68.30	19.28	150	310	Horizontal
2	5744.1250	86.28	103.00	16.72	68.30	-34.7	150	296	Horizontal
3	6938.1250	37.81	57.47	19.66	68.30	10.83	150	357	Horizontal
4	11485.9375	45.62	52.33	6.71	74.00	21.67	150	79	Horizontal
5	14993.5625	39.68	50.43	10.75	68.30	17.87	150	298	Horizontal
6	17964.2500	37.19	59.43	22.24	74.00	14.57	150	83	Horizontal

PK Final Data List					
NO.	Freq. [MHz]	Factor [dB]	Height [cm]	Angle [°]	Polarity
1	11482.1641	6.71	150	3.6	Horizontal
2	17964.2500	22.24	150	83	Horizontal

AV Final Data List									
NO.	Freq. [MHz]	Factor [dB]	AV Reading [dBμV/m]	AV Value [dBμV/m]	AV Limit [dBμV/m]	AV Margin [dB]	Height [cm]	Angle [°]	Polarity
1	11482.1641	6.71	32.02	38.73	54.00	15.27	150	3.6	Horizontal
2	17964.2500	22.24	24.53	46.77	54.00	7.23	150	83	Horizontal

Suspected Data List									
NO.	Freq. [MHz]	Reading [dBμV/m]	Level [dBμV/m]	Factor [dB]	Limit [dBμV/m]	Margin [dB]	Height [cm]	Angle [°]	Polarity
1	2400.6250	41.17	48.22	7.05	68.30	20.08	150	257	Vertical
2	2500.0000	44.71	49.97	5.26	74.00	24.03	150	244	Vertical
3	5742.6250	94.95	111.65	16.70	68.30	-43.35	150	266	Vertical
4	11485.9375	50.74	57.45	6.71	74.00	16.55	150	227	Vertical
5	17232.7500	44.46	56.62	12.16	68.30	11.68	150	97	Vertical
6	17978.6875	36.68	59.13	22.45	74.00	14.87	150	218	Vertical

PK Final Data List					
NO.	Freq. [MHz]	Factor [dB]	Height [cm]	Angle [°]	Polarity
1	2500.0000	5.26	150	244	Vertical
2	11484.3729	6.71	150	3.6	Vertical
3	17978.6875	22.45	150	218	Vertical

AV Final Data List									
NO.	Freq. [MHz]	Factor [dB]	AV Reading [dBμV/m]	AV Value [dBμV/m]	AV Limit [dBμV/m]	AV Margin [dB]	Height [cm]	Angle [°]	Polarity
1	2500.0000	5.26	33.47	38.73	54.00	15.27	150	244	Vertical
2	11484.3729	6.71	33.04	39.75	54.00	14.25	150	3.6	Vertical
3	17978.6875	22.45	24.44	46.89	54.00	7.11	150	218	Vertical

Mode: TX / IEEE 802.11a (antenna 1)
channel (5785MHz) Date: 2020/11/17

Suspected Data List									
NO.	Freq. [MHz]	Reading [dBμV/m]	Level [dBμV/m]	Factor [dB]	Limit [dBμV/m]	Margin [dB]	Height [cm]	Angle [°]	Polarity
1	1157.8000	46.30	46.69	0.39	74.00	27.31	200	152	Horizontal
2	1764.7000	44.06	47.60	3.54	68.30	20.7	200	181	Horizontal
3	2391.1000	42.65	49.52	6.87	68.30	18.78	100	222	Horizontal
4	5783.5000	84.63	101.79	17.16	68.30	-33.49	200	158	Horizontal
5	11573.2500	49.64	56.29	6.65	74.00	17.71	100	209	Horizontal
6	17995.0500	39.60	62.30	22.70	74.00	11.7	100	351	Horizontal

PK Final Data List					
NO.	Freq. [MHz]	Factor [dB]	Height [cm]	Angle [°]	Polarity
1	11570.1252	6.65	113	22.4	Horizontal
2	17995.0500	22.70	100	351	Horizontal

AV Final Data List									
NO.	Freq. [MHz]	Factor [dB]	AV Reading [dBμV/m]	AV Value [dBμV/m]	AV Limit [dBμV/m]	AV Margin [dB]	Height [cm]	Angle [°]	Polarity
1	11570.125	6.65	32.94	39.59	54.00	14.41	113	22.4	Horizontal
2	17995.050	22.70	25.67	48.37	54.00	5.63	100	351	Horizontal

Suspected Data List									
NO.	Freq. [MHz]	Reading [dBμV/m]	Level [dBμV/m]	Factor [dB]	Limit [dBμV/m]	Margin [dB]	Height [cm]	Angle [°]	Polarity
1	1331.5000	45.59	46.95	1.36	74.00	27.05	100	277	Vertical
2	2396.5000	43.28	50.26	6.98	68.30	18.04	100	283	Vertical
3	5790.7000	90.34	107.58	17.24	68.30	-39.28	200	283	Vertical
4	11569.9500	52.70	59.36	6.66	74.00	14.64	100	203	Vertical
5	14597.7000	39.91	51.00	11.09	68.30	17.30	100	77	Vertical
6	17993.9500	38.72	61.40	22.68	74.00	12.60	100	107	Vertical

PK Final Data List					
NO.	Freq. [MHz]	Factor [dB]	Height [cm]	Angle [°]	Polarity
1	11572.1483	6.65	124	166.9	Vertical
2	17993.9500	22.68	100	107	Vertical

AV Final Data List									
NO.	Freq. [MHz]	Factor [dB]	AV Reading [dBμV/m]	AV Value [dBμV/m]	AV Limit [dBμV/m]	AV Margin [dB]	Height [cm]	Angle [°]	Polarity
1	11572.1483	6.65	38.44	45.09	54.00	8.91	124	166.9	Vertical
2	17993.9500	22.68	25.52	48.20	54.00	5.80	100	107	Vertical

Mode: TX / IEEE 802.11a (antenna 1)
channel (5825MHz) Date: 2020/11/17

Suspected Data List									
NO.	Freq. [MHz]	Reading [dBμV/m]	Level [dBμV/m]	Factor [dB]	Limit [dBμV/m]	Margin [dB]	Height [cm]	Angle [°]	Polarity
1	2500.0000	44.25	49.51	5.26	74.00	24.49	150	3	Horizontal
2	3061.0000	41.46	48.69	7.23	68.30	19.61	150	345	Horizontal
3	5820.6250	84.15	101.58	17.43	68.30	-33.28	150	162	Horizontal
4	6955.3750	37.51	57.14	19.63	68.30	11.16	150	43	Horizontal
5	11653.0000	45.16	51.63	6.47	74.00	22.37	150	84	Horizontal
6	17984.8750	37.35	59.89	22.54	74.00	14.11	150	311	Horizontal

PK Final Data List					
NO.	Freq. [MHz]	Factor [dB]	Height [cm]	Angle [°]	Polarity
1	2500.0000	5.26	150	3	Horizontal
2	11645.0633	6.47	150	3.6	Horizontal
3	17984.8750	22.54	150	311	Horizontal

AV Final Data List									
NO.	Freq. [MHz]	Factor [dB]	AV Reading [dBμV/m]	AV Value [dBμV/m]	AV Limit [dBμV/m]	AV Margin [dB]	Height [cm]	Angle [°]	Polarity
1	2500.0000	5.26	33.11	38.37	54.00	15.63	150	3	Horizontal
2	11645.0633	6.47	32.45	38.92	54.00	15.08	150	3.6	Horizontal
3	17984.8750	22.54	24.89	47.43	54.00	6.57	150	311	Horizontal

Suspected Data List									
NO.	Freq. [MHz]	Reading [dBμV/m]	Level [dBμV/m]	Factor [dB]	Limit [dBμV/m]	Margin [dB]	Height [cm]	Angle [°]	Polarity
1	2500.0000	43.83	49.09	5.26	74.00	24.91	150	251	Vertical
2	5818.3750	93.49	110.92	17.43	68.30	-42.62	150	268	Vertical
3	6955.3750	34.54	54.17	19.63	68.30	14.13	150	37	Vertical
4	11652.3125	48.92	55.39	6.47	74.00	18.61	150	152	Vertical
5	17475.4375	43.39	57.07	13.68	68.30	11.23	150	105	Vertical
6	17963.5625	37.15	59.38	22.23	74.00	14.62	150	130	Vertical

PK Final Data List					
NO.	Freq. [MHz]	Factor [dB]	Height [cm]	Angle [°]	Polarity
1	2500.0000	5.26	150	251	Vertical
2	11652.5926	6.47	150	3.6	Vertical
3	17963.5625	22.23	150	130	Vertical

AV Final Data List									
NO.	Freq. [MHz]	Factor [dB]	AV Reading [dBμV/m]	AV Value [dBμV/m]	AV Limit [dBμV/m]	AV Margin [dB]	Height [cm]	Angle [°]	Polarity
1	2500.0000	5.26	32.76	38.02	54.00	15.98	150	251	Vertical
2	11652.5926	6.47	35.28	41.75	54.00	12.25	150	3.6	Vertical
3	17963.5625	22.23	24.98	47.21	54.00	6.79	150	130	Vertical

Mode: TX / IEEE 802.11n HT20(MIMO)
channel (5180MHz) Date: 2020/11/17

Suspected Data List									
NO.	Freq. [MHz]	Reading [dBμV/m]	Level [dBμV/m]	Factor [dB]	Limit [dBμV/m]	Margin [dB]	Height [cm]	Angle [°]	Polarity
1	2392.0000	40.95	47.84	6.89	68.30	20.46	150	320	Horizontal
2	5176.7500	83.33	98.18	14.85	68.30	-29.88	150	279	Horizontal
3	6955.3750	35.22	54.85	19.63	68.30	13.45	150	98	Horizontal
4	10359.8125	48.15	52.32	4.17	68.30	15.98	150	307	Horizontal
5	14403.6875	39.82	50.43	10.61	74.00	23.57	150	170	Horizontal
6	17973.8750	38.09	60.47	22.38	74.00	13.53	150	225	Horizontal

PK Final Data List					
NO.	Freq. [MHz]	Factor [dB]	Height [cm]	Angle [°]	Polarity
1	14403.6875	10.61	150	170	Horizontal
2	17973.8750	22.38	150	225	Horizontal

AV Final Data List									
NO.	Freq. [MHz]	Factor [dB]	AV Reading [dBμV/m]	AV Value [dBμV/m]	AV Limit [dBμV/m]	AV Margin [dB]	Height [cm]	Angle [°]	Polarity
1	14403.6875	10.61	29.46	40.07	54.00	13.93	150	170	Horizontal
2	17973.8750	22.38	24.64	47.02	54.00	6.98	150	225	Horizontal

Suspected Data List									
NO.	Freq. [MHz]	Reading [dBμV/m]	Level [dBμV/m]	Factor [dB]	Limit [dBμV/m]	Margin [dB]	Height [cm]	Angle [°]	Polarity
1	2499.6250	44.01	49.28	5.27	74.00	24.72	150	240	Vertical
2	5185.3750	96.36	111.22	14.86	68.30	-42.92	150	324	Vertical
3	6955.3750	35.68	55.31	19.63	68.30	12.99	150	359	Vertical
4	10363.9375	53.83	58.01	4.18	68.30	10.29	150	196	Vertical
5	15540.8125	44.14	53.48	9.34	74.00	20.52	150	137	Vertical
6	17960.1250	37.58	59.76	22.18	74.00	14.24	150	154	Vertical

PK Final Data List					
NO.	Freq. [MHz]	Factor [dB]	Height [cm]	Angle [°]	Polarity
1	2499.6250	5.27	150	240	Vertical
2	15551.5217	9.33	150	3.8	Vertical
3	17960.1250	22.18	150	154	Vertical

AV Final Data List									
NO.	Freq. [MHz]	Factor [dB]	AV Reading [dBμV/m]	AV Value [dBμV/m]	AV Limit [dBμV/m]	AV Margin [dB]	Height [cm]	Angle [°]	Polarity

1	2499.6250	5.27	32.31	37.58	54.00	16.42	150	240	Vertical
2	15551.5217	9.33	28.14	37.47	54.00	16.53	150	3.8	Vertical
3	17960.1250	22.18	24.93	47.11	54.00	6.89	150	154	Vertical

Mode: TX / IEEE 802.11n HT20(MIMO)
middle channel (5200MHz) Date: 2020/11/17

Suspected Data List									
NO.	Freq. [MHz]	Reading [dBμV/m]	Level [dBμV/m]	Factor [dB]	Limit [dBμV/m]	Margin [dB]	Height [cm]	Angle [°]	Polarity
1	2393.2000	42.60	49.51	6.91	68.30	18.79	100	283	Horizontal
2	3372.1000	42.53	50.42	7.89	68.30	17.88	200	3	Horizontal
3	5203.9000	85.88	100.81	14.93	68.30	-32.51	100	152	Horizontal
4	10400.100	54.14	58.40	4.26	68.30	9.90	100	262	Horizontal
5	15591.000	42.41	51.71	9.30	74.00	22.29	100	77	Horizontal
6	17967.000	39.32	61.60	22.28	74.00	12.40	100	77	Horizontal

PK Final Data List					
NO.	Freq. [MHz]	Factor [dB]	Height [cm]	Angle [°]	Polarity
1	15600.6664	9.29	136	37.7	Horizontal
2	17967.0000	22.28	100	77	Horizontal

AV Final Data List									
NO.	Freq. [MHz]	Factor [dB]	AV Reading [dBμV/m]	AV Value [dBμV/m]	AV Limit [dBμV/m]	AV Margin [dB]	Height [cm]	Angle [°]	Polarity
1	15600.6664	9.29	27.40	36.69	54.00	17.31	136	37.7	Horizontal
2	17967.0000	22.28	26.01	48.29	54.00	5.71	100	77	Horizontal

Suspected Data List									
NO.	Freq. [MHz]	Reading [dBμV/m]	Level [dBμV/m]	Factor [dB]	Limit [dBμV/m]	Margin [dB]	Height [cm]	Angle [°]	Polarity
1	1094.2000	46.96	46.98	0.02	74.00	27.02	100	19	Vertical
2	2395.6000	43.33	50.30	6.97	68.30	18.00	100	102	Vertical
3	5208.1000	92.43	107.41	14.98	68.30	-39.11	100	44	Vertical
4	10392.4000	60.42	64.66	4.24	68.30	3.64	100	244	Vertical
5	15609.1500	45.65	54.95	9.30	74.00	19.05	200	125	Vertical
6	17980.7500	39.41	61.89	22.48	74.00	12.11	200	340	Vertical

PK Final Data List					
NO.	Freq. [MHz]	Factor [dB]	Height [cm]	Angle [°]	Polarity
1	15601.1893	9.30	176	106.6	Vertical
2	17980.7500	22.48	200	340	Vertical

AV Final Data List									
NO.	Freq. [MHz]	Factor [dB]	AV Reading [dBμV/m]	AV Value [dBμV/m]	AV Limit [dBμV/m]	AV Margin [dB]	Height [cm]	Angle [°]	Polarity
1	15601.1893	9.30	28.95	38.25	54.00	15.75	176	106.6	Vertical
2	17980.7500	22.48	26.10	48.58	54.00	5.42	200	340	Vertical

Mode: TX / IEEE 802.11n HT20(MIMO)
channel (5240MHz) Date: 2020/11/18

Suspected Data List									
NO.	Freq. [MHz]	Reading [dBμV/m]	Level [dBμV/m]	Factor [dB]	Limit [dBμV/m]	Margin [dB]	Height [cm]	Angle [°]	Polarity
1	2500.0000	44.60	49.86	5.26	74.00	24.14	150	360	Horizontal
2	5235.6250	85.56	100.86	15.30	68.30	-32.56	150	358	Horizontal
3	6736.3750	37.93	57.53	19.60	68.30	10.77	150	298	Horizontal
4	10475.3125	48.37	53.01	4.64	68.30	15.29	150	78	Horizontal
5	15728.5000	44.55	53.79	9.24	74.00	20.21	150	254	Horizontal
6	17971.1250	37.60	59.94	22.34	74.00	14.06	150	205	Horizontal

PK Final Data List					
NO.	Freq. [MHz]	Factor [dB]	Height [cm]	Angle [°]	Polarity
1	2500.0000	5.26	150	360	Horizontal
2	15767.8213	9.24	150	3.6	Horizontal
3	17971.1250	22.34	150	205	Horizontal

AV Final Data List									
NO.	Freq. [MHz]	Factor [dB]	AV Reading [dBμV/m]	AV Value [dBμV/m]	AV Limit [dBμV/m]	AV Margin [dB]	Height [cm]	Angle [°]	Polarity
1	2500.0000	5.26	31.89	37.15	54.00	16.85	150	360	Horizontal
2	15767.8213	9.24	29.74	38.98	54.00	15.02	150	3.6	Horizontal
3	17971.1250	22.34	25.97	48.31	54.00	5.69	150	205	Horizontal

Suspected Data List									
NO.	Freq. [MHz]	Reading [dBμV/m]	Level [dBμV/m]	Factor [dB]	Limit [dBμV/m]	Margin [dB]	Height [cm]	Angle [°]	Polarity
1	2500.0000	44.05	49.31	5.26	74.00	24.69	150	250	Vertical
2	5236.7500	96.51	111.82	15.31	68.30	-43.52	150	334	Vertical
3	6991.0000	37.84	57.41	19.57	68.30	10.89	150	197	Vertical
4	10476.0000	55.41	60.06	4.65	68.30	8.24	150	201	Vertical
5	15726.4375	49.07	58.33	9.26	74.00	15.67	150	121	Vertical
6	17967.0000	37.46	59.74	22.28	74.00	14.26	150	214	Vertical

PK Final Data List					
NO.	Freq. [MHz]	Factor [dB]	Height [cm]	Angle [°]	Polarity
1	2500.0000	5.26	150	250	Vertical
2	15762.2252	9.26	150	3.6	Vertical
3	17967.0000	22.28	150	214	Vertical

AV Final Data List									
NO.	Freq. [MHz]	Factor [dB]	AV Reading [dBµV/m]	AV Value [dBµV/m]	AV Limit [dBµV/m]	AV Margin [dB]	Height [cm]	Angle [°]	Polarity
1	2500.0000	5.26	31.98	37.24	54.00	16.76	150	250	Vertical
2	15762.2252	9.26	27.69	36.95	54.00	17.05	150	3.6	Vertical
3	17967.0000	22.28	24.80	47.08	54.00	6.92	150	214	Vertical

Mode: TX / IEEE 802.11n HT20(MIMO)
channel (5260MHz) Date: 2020/11/17

Suspected Data List									
NO.	Freq. [MHz]	Reading [dBμV/m]	Level [dBμV/m]	Factor [dB]	Limit [dBμV/m]	Margin [dB]	Height [cm]	Angle [°]	Polarity
1	2500.0000	44.03	49.29	5.26	74.00	24.71	150	257	Horizontal
2	5263.7500	83.59	99.22	15.63	68.30	-30.92	150	326	Horizontal
3	6991.0000	34.33	53.90	19.57	68.30	14.40	150	110	Horizontal
4	10524.8125	48.41	53.30	4.89	68.30	15.0	150	79	Horizontal
5	15779.3750	41.28	50.27	8.99	74.00	23.73	150	3	Horizontal
6	17989.0000	36.78	59.39	22.61	74.00	14.61	150	357	Horizontal

PK Final Data List					
NO.	Freq. [MHz]	Factor [dB]	Height [cm]	Angle [°]	Polarity
1	2500.3806	5.26	150	3.6	Horizontal
2	15818.8234	8.98	150	3.6	Horizontal
3	17979.5317	22.61	150	3.6	Horizontal

AV Final Data List									
NO.	Freq. [MHz]	Factor [dB]	AV Reading [dBμV/m]	AV Value [dBμV/m]	AV Limit [dBμV/m]	AV Margin [dB]	Height [cm]	Angle [°]	Polarity
1	2500.3806	5.26	38.21	43.47	54.00	10.53	150	3.6	Horizontal
2	15818.8234	8.98	29.02	38.00	54.00	16.00	150	3.6	Horizontal
3	17979.5317	22.61	24.30	46.91	54.00	7.09	150	3.6	Horizontal

Suspected Data List									
NO.	Freq. [MHz]	Reading [dBμV/m]	Level [dBμV/m]	Factor [dB]	Limit [dBμV/m]	Margin [dB]	Height [cm]	Angle [°]	Polarity
1	2500.0000	44.07	49.33	5.26	74.00	24.67	150	237	Vertical
2	5264.1250	96.50	112.14	15.64	68.30	-43.84	150	323	Vertical
3	6998.5000	37.22	56.77	19.55	68.30	11.53	150	327	Vertical
4	10519.3125	57.20	62.07	4.87	68.30	6.23	150	205	Vertical
5	15778.0000	44.33	53.32	8.99	74.00	20.68	150	57	Vertical
6	17968.3750	37.09	59.39	22.30	74.00	14.61	150	213	Vertical

PK Final Data List					
NO.	Freq. [MHz]	Factor [dB]	Height [cm]	Angle [°]	Polarity
1	15784.9534	9.00	150	3.8	Vertical
2	17979.5552	22.30	150	3.6	Vertical

AV Final Data List									
NO.	Freq. [MHz]	Factor [dB]	AV Reading [dBμV/m]	AV Value [dBμV/m]	AV Limit [dBμV/m]	AV Margin [dB]	Height [cm]	Angle [°]	Polarity
1	15784.9534	9.00	28.00	37.00	54.00	17.0	150	3.8	Vertical
2	17979.5552	22.30	24.66	46.96	54.00	7.04	150	3.6	Vertical

Mode: TX / IEEE 802.11n HT20(MIMO)
channel (5300MHz) Date: 2020/11/17

Suspected Data List									
NO.	Freq. [MHz]	Reading [dBμV/m]	Level [dBμV/m]	Factor [dB]	Limit [dBμV/m]	Margin [dB]	Height [cm]	Angle [°]	Polarity
1	2398.6000	43.43	50.46	7.03	68.30	17.84	200	339	Horizontal
2	5305.6000	85.03	101.08	16.05	68.30	-32.78	200	286	Horizontal
3	10604.1500	52.70	57.96	5.26	74.00	16.04	100	134	Horizontal
4	14345.2500	40.03	50.95	10.92	68.30	17.35	200	116	Horizontal
5	15906.7000	41.22	50.28	9.06	74.00	23.72	100	10	Horizontal
6	17976.3500	39.47	61.89	22.42	74.00	12.11	100	134	Horizontal

PK Final Data List					
NO.	Freq. [MHz]	Factor [dB]	Height [cm]	Angle [°]	Polarity
1	10596.5150	5.25	112	18.1	Horizontal
2	15895.2472	9.06	136	28.2	Horizontal
3	17976.3500	22.42	100	134	Horizontal

AV Final Data List									
NO.	Freq. [MHz]	Factor [dB]	AV Reading [dBμV/m]	AV Value [dBμV/m]	AV Limit [dBμV/m]	AV Margin [dB]	Height [cm]	Angle [°]	Polarity
1	10596.5150	5.25	30.94	36.19	54.00	17.81	112	18.1	Horizontal
2	15895.2472	9.06	26.36	35.42	54.00	18.58	136	28.2	Horizontal
3	17976.3500	22.42	25.76	48.18	54.00	5.82	100	134	Horizontal

Suspected Data List									
NO.	Freq. [MHz]	Reading [dBμV/m]	Level [dBμV/m]	Factor [dB]	Limit [dBμV/m]	Margin [dB]	Height [cm]	Angle [°]	Polarity
1	1070.2000	45.85	45.76	-0.09	74.00	28.24	100	293	Vertical
2	2399.2000	42.61	49.65	7.04	68.30	18.65	200	350	Vertical
3	5292.4000	91.92	107.89	15.97	68.30	-39.59	200	321	Vertical
4	10610.7500	59.87	65.11	5.24	74.00	8.89	100	235	Vertical
5	15903.4000	45.15	54.21	9.06	74.00	19.79	100	224	Vertical
6	17984.6000	38.96	61.50	22.54	74.00	12.50	200	283	Vertical

PK Final Data List					
NO.	Freq. [MHz]	Factor [dB]	Height [cm]	Angle [°]	Polarity
1	15895.9254	9.05	125	30.2	Vertical
2	17984.6000	22.54	200	283	Vertical

AV Final Data List									
NO.	Freq. [MHz]	Factor [dB]	AV Reading [dBμV/m]	AV Value [dBμV/m]	AV Limit [dBμV/m]	AV Margin [dB]	Height [cm]	Angle [°]	Polarity
1	15895.9254	9.05	25.70	34.75	54.00	19.25	125	30.2	Vertical
2	17984.6000	22.54	25.33	47.87	54.00	6.13	200	283	Vertical

Mode: TX / IEEE 802.11n HT20(MIMO)
channel (5320MHz) Date: 2020/11/17

Suspected Data List									
NO.	Freq. [MHz]	Reading [dBμV/m]	Level [dBμV/m]	Factor [dB]	Limit [dBμV/m]	Margin [dB]	Height [cm]	Angle [°]	Polarity
1	2500.0000	44.24	49.50	5.26	74.00	24.50	150	3	Horizontal
2	5323.3750	84.79	100.82	16.03	68.30	-32.52	150	50	Horizontal
3	6998.5000	35.06	54.61	19.55	68.30	13.69	150	249	Horizontal
4	10632.062	47.91	53.09	5.18	74.00	20.91	150	79	Horizontal
5	15953.312	47.28	56.32	9.04	74.00	17.68	150	3	Horizontal
6	17963.562	36.54	58.77	22.23	74.00	15.23	150	126	Horizontal

PK Final Data List					
NO.	Freq. [MHz]	Factor [dB]	Height [cm]	Angle [°]	Polarity
1	2500.0000	5.26	150	3	Horizontal
2	10632.0625	5.18	150	79	Horizontal
3	15953.3125	9.04	150	3	Horizontal
4	17963.5625	22.23	150	126	Horizontal

AV Final Data List									
NO.	Freq. [MHz]	Factor [dB]	AV Reading [dBμV/m]	AV Value [dBμV/m]	AV Limit [dBμV/m]	AV Margin [dB]	Height [cm]	Angle [°]	Polarity
1	2500.0000	5.26	33.56	38.82	54.00	15.18	150	3	Horizontal
2	10632.062	5.18	34.12	39.30	54.00	14.70	150	79	Horizontal
3	15953.312	9.04	28.22	37.26	54.00	16.74	150	3	Horizontal
4	17963.562	22.23	24.56	46.79	54.00	7.21	150	126	Horizontal

Suspected Data List									
NO.	Freq. [MHz]	Reading [dBμV/m]	Level [dBμV/m]	Factor [dB]	Limit [dBμV/m]	Margin [dB]	Height [cm]	Angle [°]	Polarity
1	2500.0000	43.94	49.20	5.26	74.00	24.80	150	238	Vertical
2	5318.1250	96.35	112.39	16.04	68.30	-44.09	150	321	Vertical
3	6986.8750	37.83	57.40	19.57	68.30	10.90	150	195	Vertical
4	10643.750	54.69	59.83	5.14	74.00	14.17	150	230	Vertical
5	15958.812	49.30	58.34	9.04	74.00	15.66	150	50	Vertical
6	17976.625	37.07	59.49	22.42	74.00	14.51	150	286	Vertical

PK Final Data List					
NO.	Freq. [MHz]	Factor [dB]	Height [cm]	Angle [°]	Polarity
1	2500.0000	5.26	150	238	Vertical
2	10631.4688	5.15	150	3.6	Vertical
3	15969.8098	9.04	150	3.6	Vertical
4	17976.6250	22.42	150	286	Vertical

AV Final Data List									
NO.	Freq. [MHz]	Factor [dB]	AV Reading [dBµV/m]	AV Value [dBµV/m]	AV Limit [dBµV/m]	AV Margin [dB]	Height [cm]	Angle [°]	Polarity
1	2500.0000	5.26	33.08	38.34	54.00	15.66	150	238	Vertical
2	10631.4688	5.15	31.61	36.76	54.00	17.24	150	3.6	Vertical
3	15969.8098	9.04	28.67	37.71	54.00	16.29	150	3.6	Vertical
4	17976.6250	22.42	24.65	47.07	54.00	6.93	150	286	Vertical

Mode: TX / IEEE 802.11n HT20(MIMO)
channel (5500MHz) Date: 2020/11/17

Suspected Data List									
NO.	Freq. [MHz]	Reading [dBμV/m]	Level [dBμV/m]	Factor [dB]	Limit [dBμV/m]	Margin [dB]	Height [cm]	Angle [°]	Polarity
1	2140.0000	40.41	45.56	5.15	68.30	22.74	150	29	Horizontal
2	2500.0000	45.03	50.29	5.26	74.00	23.71	150	254	Horizontal
3	5507.8750	82.08	98.19	16.11	68.30	-29.89	150	29	Horizontal
4	6986.8750	34.82	54.39	19.57	68.30	13.91	150	202	Horizontal
5	11002.6250	45.25	51.47	6.22	74.00	22.53	150	70	Horizontal
6	17988.3125	37.28	59.88	22.60	74.00	14.12	150	70	Horizontal

PK Final Data List					
NO.	Freq. [MHz]	Factor [dB]	Height [cm]	Angle [°]	Polarity
1	2500.0000	5.26	150	254	Horizontal
2	11000.9499	6.22	150	3.6	Horizontal
3	17988.3125	22.60	150	70	Horizontal

AV Final Data List									
NO.	Freq. [MHz]	Factor [dB]	AV Reading [dBμV/m]	AV Value [dBμV/m]	AV Limit [dBμV/m]	AV Margin [dB]	Height [cm]	Angle [°]	Polarity
1	2500.0000	5.26	33.45	38.71	54.00	15.29	150	254	Horizontal
2	11000.9499	6.22	30.73	36.95	54.00	17.05	150	3.6	Horizontal
3	17988.3125	22.60	24.81	47.41	54.00	6.59	150	70	Horizontal

Suspected Data List									
NO.	Freq. [MHz]	Reading [dBμV/m]	Level [dBμV/m]	Factor [dB]	Limit [dBμV/m]	Margin [dB]	Height [cm]	Angle [°]	Polarity
1	2500.0000	44.48	49.74	5.26	74.00	24.26	150	248	Vertical
2	5496.6250	94.38	110.48	16.10	68.30	-42.18	150	39	Vertical
3	6986.8750	37.59	57.16	19.57	68.30	11.14	150	244	Vertical
4	11000.562	51.80	58.02	6.22	74.00	15.98	150	206	Vertical
5	16495.750	41.79	51.05	9.26	68.30	17.25	150	57	Vertical
6	17989.000	36.25	58.86	22.61	74.00	15.14	150	197	Vertical

PK Final Data List					
NO.	Freq. [MHz]	Factor [dB]	Height [cm]	Angle [°]	Polarity
1	2500.0000	5.26	150	248	Vertical
2	11006.8208	6.22	150	3.6	Vertical
3	17989.0000	22.61	150	197	Vertical

AV Final Data List									
NO.	Freq. [MHz]	Factor [dB]	AV Reading [dBµV/m]	AV Value [dBµV/m]	AV Limit [dBµV/m]	AV Margin [dB]	Height [cm]	Angle [°]	Polarity
1	2500.0000	5.26	32.89	38.15	54.00	15.85	150	248	Vertical
2	11006.8208	6.22	33.44	39.66	54.00	14.34	150	3.6	Vertical
3	17989.0000	22.61	24.81	47.42	54.00	6.58	150	197	Vertical

Mode: TX / IEEE 802.11n HT20(MIMO)
channel (5580MHz) Date: 2020/11/17

Suspected Data List									
NO.	Freq. [MHz]	Reading [dBμV/m]	Level [dBμV/m]	Factor [dB]	Limit [dBμV/m]	Margin [dB]	Height [cm]	Angle [°]	Polarity
1	1592.200	44.05	46.47	2.42	74.00	27.53	200	234	Horizontal
2	2403.400	42.86	49.86	7.00	68.30	18.44	200	228	Horizontal
3	5586.700	83.08	99.24	16.16	68.30	-30.94	200	265	Horizontal
4	11159.65	48.96	55.44	6.48	74.00	18.56	200	240	Horizontal
5	14287.50	40.23	51.27	11.04	68.30	17.03	200	283	Horizontal
6	17991.75	38.73	61.38	22.65	74.00	12.62	100	119	Horizontal

PK Final Data List					
NO.	Freq. [MHz]	Factor [dB]	Height [cm]	Angle [°]	Polarity
1	11159.5384	6.49	187	228.9	Horizontal
2	17991.7500	22.65	100	119	Horizontal

AV Final Data List									
NO.	Freq. [MHz]	Factor [dB]	AV Reading [dBμV/m]	AV Value [dBμV/m]	AV Limit [dBμV/m]	AV Margin [dB]	Height [cm]	Angle [°]	Polarity
1	11159.53	6.49	31.91	38.40	54.00	15.60	187	228.9	Horizontal
2	17991.75	22.65	25.92	48.57	54.00	5.43	100	119	Horizontal

Suspected Data List									
NO.	Freq. [MHz]	Reading [dBμV/m]	Level [dBμV/m]	Factor [dB]	Limit [dBμV/m]	Margin [dB]	Height [cm]	Angle [°]	Polarity
1	1023.4000	47.18	46.88	-0.30	74.00	27.12	100	160	Vertical
2	2399.2000	42.87	49.91	7.04	68.30	18.39	100	83	Vertical
3	5587.0000	82.62	98.78	16.16	68.30	-30.48	200	322	Vertical
4	11155.250	48.22	54.69	6.47	74.00	19.31	100	265	Vertical
5	14593.850	39.62	50.68	11.06	68.30	17.62	200	230	Vertical
6	17994.500	38.88	61.57	22.69	74.00	12.43	100	222	Vertical

PK Final Data List					
NO.	Freq. [MHz]	Factor [dB]	Height [cm]	Angle [°]	Polarity
1	11159.9352	6.47	124	244.5	Vertical
2	17994.5000	22.69	100	222	Vertical

AV Final Data List									
NO.	Freq. [MHz]	Factor [dB]	AV Reading [dBμV/m]	AV Value [dBμV/m]	AV Limit [dBμV/m]	AV Margin [dB]	Height [cm]	Angle [°]	Polarity
1	11159.9352	6.47	40.08	46.55	54.00	7.45	124	244.5	Vertical
2	17994.5000	22.69	26.18	48.87	54.00	5.13	100	222	Vertical

Mode: TX / IEEE 802.11n HT20(MIMO)
channel (5700MHz) Date: 2020/11/17

Suspected Data List									
NO.	Freq. [MHz]	Reading [dBμV/m]	Level [dBμV/m]	Factor [dB]	Limit [dBμV/m]	Margin [dB]	Height [cm]	Angle [°]	Polarity
1	2499.6250	44.21	49.48	5.27	74.00	24.52	150	360	Horizontal
2	5695.3750	82.31	98.53	16.22	68.30	-30.23	150	268	Horizontal
3	6877.3750	36.85	56.63	19.78	68.30	11.67	150	320	Horizontal
4	11399.3125	43.52	50.04	6.52	74.00	23.96	150	69	Horizontal
5	17098.0000	40.43	52.14	11.71	68.30	16.16	150	328	Horizontal
6	17954.6250	37.26	59.35	22.09	74.00	14.65	150	294	Horizontal

PK Final Data List					
NO.	Freq. [MHz]	Factor [dB]	Height [cm]	Angle [°]	Polarity
1	2499.6250	5.27	150	360	Horizontal
2	11413.4703	6.52	150	3.8	Horizontal
3	17954.6250	22.09	150	294	Horizontal

AV Final Data List									
NO.	Freq. [MHz]	Factor [dB]	AV Reading [dBμV/m]	AV Value [dBμV/m]	AV Limit [dBμV/m]	AV Margin [dB]	Height [cm]	Angle [°]	Polarity
1	2499.6250	5.27	32.63	37.90	54.00	16.10	150	360	Horizontal
2	11413.4703	6.52	29.99	36.51	54.00	17.49	150	3.8	Horizontal
3	17954.6250	22.09	26.10	48.19	54.00	5.81	150	294	Horizontal

Suspected Data List									
NO.	Freq. [MHz]	Reading [dBμV/m]	Level [dBμV/m]	Factor [dB]	Limit [dBμV/m]	Margin [dB]	Height [cm]	Angle [°]	Polarity
1	2500.0000	44.62	49.88	5.26	74.00	24.12	150	236	Vertical
2	5692.3750	95.10	111.32	16.22	68.30	-43.02	150	315	Vertical
3	6998.1250	37.99	57.54	19.55	68.30	10.76	150	3	Vertical
4	11398.6250	48.46	54.98	6.52	74.00	19.02	150	216	Vertical
5	17098.6875	45.93	57.65	11.72	68.30	10.65	150	115	Vertical
6	17984.1875	36.94	59.47	22.53	74.00	14.53	150	238	Vertical

PK Final Data List					
NO.	Freq. [MHz]	Factor [dB]	Height [cm]	Angle [°]	Polarity
1	2500.0000	5.26	150	236	Vertical
2	11410.3159	6.52	150	3.6	Vertical
3	17984.1875	22.53	150	238	Vertical

AV Final Data List									
NO.	Freq. [MHz]	Factor [dB]	AV Reading [dBµV/m]	AV Value [dBµV/m]	AV Limit [dBµV/m]	AV Margin [dB]	Height [cm]	Angle [°]	Polarity
1	2500.0000	5.26	33.22	38.48	54.00	15.52	150	236	Vertical
2	11410.3159	6.52	31.21	37.73	54.00	16.27	150	3.6	Vertical
3	17984.1875	22.53	24.33	46.86	54.00	7.14	150	238	Vertical

Mode: TX / IEEE 802.11n HT20(MIMO)
channel (5745MHz) Date: 2020/11/17

Suspected Data List									
NO.	Freq. [MHz]	Reading [dBμV/m]	Level [dBμV/m]	Factor [dB]	Limit [dBμV/m]	Margin [dB]	Height [cm]	Angle [°]	Polarity
1	1824.6250	41.67	45.29	3.62	68.30	23.01	150	186	Horizontal
2	2447.1250	45.45	51.66	6.21	68.30	16.64	150	160	Horizontal
3	5740.3750	80.97	97.65	16.68	68.30	-29.35	150	268	Horizontal
4	6939.6250	37.03	56.68	19.65	68.30	11.62	150	344	Horizontal
5	11485.2500	43.39	50.10	6.71	74.00	23.9	150	340	Horizontal
6	17964.2500	37.41	59.65	22.24	74.00	14.35	150	0	Horizontal

PK Final Data List					
NO.	Freq. [MHz]	Factor [dB]	Height [cm]	Angle [°]	Polarity
1	11492.0602	6.70	150	3.6	Horizontal
2	17964.2500	22.24	150	0	Horizontal

AV Final Data List									
NO.	Freq. [MHz]	Factor [dB]	AV Reading [dBμV/m]	AV Value [dBμV/m]	AV Limit [dBμV/m]	AV Margin [dB]	Height [cm]	Angle [°]	Polarity
1	11492.0602	6.70	30.67	37.37	54.00	16.63	150	3.6	Horizontal
2	17964.2500	22.24	24.79	47.03	54.00	6.97	150	0	Horizontal

Suspected Data List									
NO.	Freq. [MHz]	Reading [dBμV/m]	Level [dBμV/m]	Factor [dB]	Limit [dBμV/m]	Margin [dB]	Height [cm]	Angle [°]	Polarity
1	2412.6250	43.42	50.25	6.83	68.30	18.05	150	73	Vertical
2	5741.1250	95.22	111.90	16.68	68.30	-43.6	150	319	Vertical
3	6939.6250	34.39	54.04	19.65	68.30	14.26	150	248	Vertical
4	11486.6250	48.09	54.80	6.71	74.00	19.2	150	209	Vertical
5	17245.1250	41.03	53.29	12.26	68.30	15.01	150	104	Vertical
6	17966.3125	38.54	60.81	22.27	74.00	13.19	150	49	Vertical

PK Final Data List					
NO.	Freq. [MHz]	Factor [dB]	Height [cm]	Angle [°]	Polarity
1	11482.3911	6.71	150	3.6	Vertical
2	17966.3125	22.27	150	49	Vertical

AV Final Data List									
NO.	Freq. [MHz]	Factor [dB]	AV Reading [dBμV/m]	AV Value [dBμV/m]	AV Limit [dBμV/m]	AV Margin [dB]	Height [cm]	Angle [°]	Polarity
1	11482.3911	6.71	31.63	38.34	54.00	15.66	150	3.6	Vertical
2	17966.3125	22.27	24.83	47.10	54.00	6.90	150	49	Vertical

Mode: TX / IEEE 802.11n HT20(MIMO)
channel (5785MHz) Date: 2020/11/17

Suspected Data List									
NO.	Freq. [MHz]	Reading [dBμV/m]	Level [dBμV/m]	Factor [dB]	Limit [dBμV/m]	Margin [dB]	Height [cm]	Angle [°]	Polarity
1	1748.8000	44.15	47.60	3.45	68.30	20.70	200	45	Horizontal
2	2402.5000	42.97	49.99	7.02	68.30	18.31	100	158	Horizontal
3	5788.3000	82.59	99.81	17.22	68.30	-31.51	200	200	Horizontal
4	11566.1000	46.01	52.67	6.66	74.00	21.33	100	262	Horizontal
5	13320.0500	40.76	49.83	9.07	74.00	24.17	200	309	Horizontal
6	17969.7500	39.38	61.70	22.32	74.00	12.30	200	321	Horizontal

PK Final Data List					
NO.	Freq. [MHz]	Factor [dB]	Height [cm]	Angle [°]	Polarity
1	11569.5698	6.66	124	78.1	Horizontal
2	13370.9326	9.07	152	51.3	Horizontal
3	17969.7500	22.32	200	321	Horizontal

AV Final Data List									
NO.	Freq. [MHz]	Factor [dB]	AV Reading [dBμV/m]	AV Value [dBμV/m]	AV Limit [dBμV/m]	AV Margin [dB]	Height [cm]	Angle [°]	Polarity
1	11569.5698	6.66	30.68	37.34	54.00	16.66	124	78.1	Horizontal
2	13370.9326	9.07	26.78	35.85	54.00	18.15	152	51.3	Horizontal
3	17969.7500	22.32	25.33	47.65	54.00	6.35	200	321	Horizontal

Suspected Data List									
NO.	Freq. [MHz]	Reading [dBμV/m]	Level [dBμV/m]	Factor [dB]	Limit [dBμV/m]	Margin [dB]	Height [cm]	Angle [°]	Polarity
1	1724.5000	43.60	46.90	3.30	68.30	21.40	200	283	Vertical
2	2396.5000	42.78	49.76	6.98	68.30	18.54	200	157	Vertical
3	5788.9000	90.66	107.88	17.22	68.30	-39.58	200	283	Vertical
4	11571.6000	50.01	56.66	6.65	74.00	17.34	100	201	Vertical
5	13892.6000	40.51	50.99	10.48	68.30	17.31	200	309	Vertical
6	17966.4500	39.20	61.47	22.27	74.00	12.53	100	113	Vertical

PK Final Data List					
NO.	Freq. [MHz]	Factor [dB]	Height [cm]	Angle [°]	Polarity
1	11570.0957	6.65	112	167.8	Vertical
2	17966.4500	22.27	100	113	Vertical

AV Final Data List									
NO.	Freq. [MHz]	Factor [dB]	AV Reading [dBμV/m]	AV Value [dBμV/m]	AV Limit [dBμV/m]	AV Margin [dB]	Height [cm]	Angle [°]	Polarity
1	11570.0957	6.65	36.00	42.65	54.00	11.35	112	167.8	Vertical
2	17966.4500	22.27	25.98	48.25	54.00	5.75	100	113	Vertical

Mode: TX / IEEE 802.11n HT20(MIMO)
channel (5825MHz) Date: 2020/11/17

Suspected Data List									
NO.	Freq. [MHz]	Reading [dBμV/m]	Level [dBμV/m]	Factor [dB]	Limit [dBμV/m]	Margin [dB]	Height [cm]	Angle [°]	Polarity
1	1746.2500	42.08	45.51	3.43	68.30	22.79	150	69	Horizontal
2	2500.0000	43.93	49.19	5.26	74.00	24.81	150	260	Horizontal
3	5823.6250	81.43	98.88	17.45	68.30	-30.58	150	358	Horizontal
4	6939.6250	34.67	54.32	19.65	68.30	13.98	150	21	Horizontal
5	11651.6250	43.03	49.50	6.47	74.00	24.50	150	290	Horizontal
6	17993.1250	36.29	58.96	22.67	74.00	15.04	150	316	Horizontal

PK Final Data List					
NO.	Freq. [MHz]	Factor [dB]	Height [cm]	Angle [°]	Polarity
1	2500.0000	5.26	150	260	Horizontal
2	11651.1582	6.47	150	3.6	Horizontal
3	17959.1983	22.67	150	3.6	Horizontal

AV Final Data List									
NO.	Freq. [MHz]	Factor [dB]	AV Reading [dBμV/m]	AV Value [dBμV/m]	AV Limit [dBμV/m]	AV Margin [dB]	Height [cm]	Angle [°]	Polarity
1	2500.0000	5.26	34.12	39.38	54.00	14.62	150	260	Horizontal
2	11651.1582	6.47	30.72	37.19	54.00	16.81	150	3.6	Horizontal
3	17959.1983	22.67	26.18	48.85	54.00	5.15	150	3.6	Horizontal

Suspected Data List									
NO.	Freq. [MHz]	Reading [dBμV/m]	Level [dBμV/m]	Factor [dB]	Limit [dBμV/m]	Margin [dB]	Height [cm]	Angle [°]	Polarity
1	2408.8750	40.93	47.83	6.90	68.30	20.47	150	282	Vertical
2	2500.0000	44.18	49.44	5.26	74.00	24.56	150	238	Vertical
3	5824.0000	93.91	111.36	17.45	68.30	-43.06	150	317	Vertical
4	6968.5000	37.71	57.31	19.60	68.30	10.99	150	3	Vertical
5	11654.3750	46.83	53.29	6.46	74.00	20.71	150	158	Vertical
6	18000.0000	36.79	59.56	22.77	74.00	14.44	150	4	Vertical

PK Final Data List					
NO.	Freq. [MHz]	Factor [dB]	Height [cm]	Angle [°]	Polarity
1	2500.0000	5.26	150	238	Vertical
2	11653.6279	6.46	150	3.6	Vertical
3	17957.4519	22.77	150	3.5	Vertical

AV Final Data List									
NO.	Freq. [MHz]	Factor [dB]	AV Reading [dBμV/m]	AV Value [dBμV/m]	AV Limit [dBμV/m]	AV Margin [dB]	Height [cm]	Angle [°]	Polarity
1	2500.0000	5.26	33.66	38.92	54.00	15.08	150	238	Vertical
2	11653.6279	6.46	32.69	39.15	54.00	14.85	150	3.6	Vertical
3	17957.4519	22.77	24.02	46.79	54.00	7.21	150	3.5	Vertical

Mode: TX / IEEE 802.11n HT40(MIMO)
channel (5190MHz) Date: 2020/11/17

Suspected Data List									
NO.	Freq. [MHz]	Reading [dBμV/m]	Level [dBμV/m]	Factor [dB]	Limit [dBμV/m]	Margin [dB]	Height [cm]	Angle [°]	Polarity
1	2398.0000	40.68	47.70	7.02	68.30	20.6	150	352	Horizontal
2	2500.0000	44.39	49.65	5.26	74.00	24.35	150	241	Horizontal
3	5193.2500	80.15	95.02	14.87	68.30	-26.72	150	322	Horizontal
4	10379.7500	45.40	49.62	4.22	68.30	18.68	150	38	Horizontal
5	14484.1250	40.11	50.65	10.54	74.00	23.35	150	264	Horizontal
6	17990.3750	36.09	58.72	22.63	74.00	15.28	150	38	Horizontal

PK Final Data List					
NO.	Freq. [MHz]	Factor [dB]	Height [cm]	Angle [°]	Polarity
1	2500.0000	5.26	150	241	Horizontal
2	14493.9900	10.55	150	3.6	Horizontal
3	17990.3750	22.63	150	38	Horizontal

AV Final Data List									
NO.	Freq. [MHz]	Factor [dB]	AV Reading [dBμV/m]	AV Value [dBμV/m]	AV Limit [dBμV/m]	AV Margin [dB]	Height [cm]	Angle [°]	Polarity
1	2500.0000	5.26	33.29	38.55	54.00	15.45	150	241	Horizontal
2	14493.9900	10.55	27.77	38.32	54.00	15.68	150	3.6	Horizontal
3	17990.3750	22.63	24.91	47.54	54.00	6.46	150	38	Horizontal

Suspected Data List									
NO.	Freq. [MHz]	Reading [dBμV/m]	Level [dBμV/m]	Factor [dB]	Limit [dBμV/m]	Margin [dB]	Height [cm]	Angle [°]	Polarity
1	2500.0000	44.17	49.43	5.26	74.00	24.57	150	245	Vertical
2	5196.6250	93.49	108.37	14.88	68.30	-40.07	150	325	Vertical
3	6986.8750	37.27	56.84	19.57	68.30	11.46	150	262	Vertical
4	10381.8125	50.64	54.86	4.22	68.30	13.44	150	201	Vertical
5	15004.5625	39.87	50.57	10.70	68.30	17.73	150	272	Vertical
6	17985.5625	36.64	59.19	22.55	74.00	14.81	150	15	Vertical

PK Final Data List					
NO.	Freq. [MHz]	Factor [dB]	Height [cm]	Angle [°]	Polarity
1	2500.0000	5.26	150	245	Vertical
2	17985.5625	22.55	150	15	Vertical

AV Final Data List									
NO.	Freq. [MHz]	Factor [dB]	AV Reading [dBµV/m]	AV Value [dBµV/m]	AV Limit [dBµV/m]	AV Margin [dB]	Height [cm]	Angle [°]	Polarity
1	2500.0000	5.26	32.96	38.22	54.00	15.78	150	245	Vertical
2	17985.5625	22.55	24.06	46.61	54.00	7.39	150	15	Vertical

Mode: TX / IEEE 802.11n HT40(MIMO)
channel (5230MHz) Date: 2020/11/17

Suspected Data List									
NO.	Freq. [MHz]	Reading [dBμV/m]	Level [dBμV/m]	Factor [dB]	Limit [dBμV/m]	Margin [dB]	Height [cm]	Angle [°]	Polarity
1	2499.6250	45.61	50.88	5.27	74.00	23.12	150	263	Horizontal
2	5232.2500	82.17	97.43	15.26	68.30	-29.13	150	358	Horizontal
3	10464.3125	43.87	48.46	4.59	68.30	19.84	150	305	Horizontal
4	14561.8125	38.93	49.81	10.88	68.30	18.49	150	236	Horizontal
5	15691.3750	40.10	49.48	9.38	74.00	24.52	150	254	Horizontal
6	17947.0625	37.25	59.23	21.98	74.00	14.77	150	196	Horizontal

PK Final Data List					
NO.	Freq. [MHz]	Factor [dB]	Height [cm]	Angle [°]	Polarity
1	2500.3661	5.27	150	3.6	Horizontal
2	15688.2317	9.38	150	14.5	Horizontal
3	17991.9302	21.99	150	3.8	Horizontal

AV Final Data List									
NO.	Freq. [MHz]	Factor [dB]	AV Reading [dBμV/m]	AV Value [dBμV/m]	AV Limit [dBμV/m]	AV Margin [dB]	Height [cm]	Angle [°]	Polarity
1	2500.3661	5.27	38.09	43.36	54.00	10.64	150	3.6	Horizontal
2	15688.2317	9.38	27.78	37.16	54.00	16.84	150	14.5	Horizontal
3	17991.9302	21.99	25.90	47.89	54.00	6.11	150	3.8	Horizontal

Suspected Data List									
NO.	Freq. [MHz]	Reading [dBμV/m]	Level [dBμV/m]	Factor [dB]	Limit [dBμV/m]	Margin [dB]	Height [cm]	Angle [°]	Polarity
1	2500.0000	44.03	49.29	5.26	74.00	24.71	150	250	Vertical
2	5232.6250	93.60	108.86	15.26	68.30	-40.56	150	336	Vertical
3	6905.1250	37.74	57.45	19.71	68.30	10.85	150	7	Vertical
4	10458.8125	50.68	55.24	4.56	68.30	13.06	150	203	Vertical
5	15690.0000	43.50	52.88	9.38	74.00	21.12	150	114	Vertical
6	17994.5000	36.29	58.98	22.69	74.00	15.02	150	220	Vertical

PK Final Data List					
NO.	Freq. [MHz]	Factor [dB]	Height [cm]	Angle [°]	Polarity
1	2500.0000	5.26	150	250	Vertical
2	15711.4983	9.38	150	3.6	Vertical
3	17971.4510	22.69	150	3.6	Vertical

AV Final Data List									
NO.	Freq. [MHz]	Factor [dB]	AV Reading [dBµV/m]	AV Value [dBµV/m]	AV Limit [dBµV/m]	AV Margin [dB]	Height [cm]	Angle [°]	Polarity
1	2500.0000	5.26	33.96	39.22	54.00	14.78	150	250	Vertical
2	15711.4983	9.38	27.34	36.72	54.00	17.28	150	3.6	Vertical
3	17971.4510	22.69	25.00	47.69	54.00	6.31	150	3.6	Vertical

Mode: TX / IEEE 802.11n HT40(MIMO)
channel (5270MHz) Date: 2020/11/17

Suspected Data List									
NO.	Freq. [MHz]	Reading [dBμV/m]	Level [dBμV/m]	Factor [dB]	Limit [dBμV/m]	Margin [dB]	Height [cm]	Angle [°]	Polarity
1	2500.0000	44.93	50.19	5.26	74.00	23.81	150	3	Horizontal
2	5275.7500	81.08	96.85	15.77	68.30	-28.55	150	49	Horizontal
3	6794.5000	36.32	56.28	19.96	68.30	12.02	150	157	Horizontal
4	10539.2500	46.35	51.32	4.97	68.30	16.98	150	79	Horizontal
5	14527.4375	39.08	49.77	10.69	68.30	18.53	150	62	Horizontal
6	17982.8125	36.07	58.58	22.51	74.00	15.42	150	121	Horizontal

PK Final Data List					
NO.	Freq. [MHz]	Factor [dB]	Height [cm]	Angle [°]	Polarity
1	2500.0000	5.26	150	3	Horizontal
2	17982.8125	22.51	150	121	Horizontal

AV Final Data List									
NO.	Freq. [MHz]	Factor [dB]	AV Reading [dBμV/m]	AV Value [dBμV/m]	AV Limit [dBμV/m]	AV Margin [dB]	Height [cm]	Angle [°]	Polarity
1	2500.0000	5.26	35.68	40.94	54.00	13.06	150	3	Horizontal
2	17982.8125	22.51	24.43	46.94	54.00	7.06	150	121	Horizontal

Suspected Data List									
NO.	Freq. [MHz]	Reading [dBμV/m]	Level [dBμV/m]	Factor [dB]	Limit [dBμV/m]	Margin [dB]	Height [cm]	Angle [°]	Polarity
1	2500.0000	43.66	48.92	5.26	74.00	25.08	150	249	Vertical
2	5274.6250	93.96	109.72	15.76	68.30	-41.42	150	29	Vertical
3	6883.3750	37.19	56.95	19.76	68.30	11.35	150	29	Vertical
4	10537.187	52.26	57.22	4.96	68.30	11.08	150	201	Vertical
5	15810.312	42.31	51.21	8.90	74.00	22.79	150	62	Vertical
6	17978.000	38.07	60.51	22.44	74.00	13.49	150	83	Vertical

PK Final Data List					
NO.	Freq. [MHz]	Factor [dB]	Height [cm]	Angle [°]	Polarity
1	2500.0000	5.26	150	249	Vertical
2	15835.3962	8.90	150	3.6	Vertical
3	17978.0000	22.44	150	83	Vertical

AV Final Data List									
NO.	Freq. [MHz]	Factor [dB]	AV Reading [dBμV/m]	AV Value [dBμV/m]	AV Limit [dBμV/m]	AV Margin [dB]	Height [cm]	Angle [°]	Polarity
1	2500.0000	5.26	35.99	41.25	54.00	12.75	150	249	Vertical
2	15835.3962	8.90	27.54	36.44	54.00	17.56	150	3.6	Vertical
3	17978.0000	22.44	24.09	46.53	54.00	7.47	150	83	Vertical

Mode: TX / IEEE 802.11n HT40(MIMO)
channel (5310MHz) Date: 2020/11/17

Suspected Data List									
NO.	Freq. [MHz]	Reading [dBμV/m]	Level [dBμV/m]	Factor [dB]	Limit [dBμV/m]	Margin [dB]	Height [cm]	Angle [°]	Polarity
1	2499.6250	44.17	49.44	5.27	74.00	24.56	150	360	Horizontal
2	5312.5000	81.73	97.78	16.05	68.30	-29.48	150	49	Horizontal
3	6793.3750	36.28	56.23	19.95	68.30	12.07	150	359	Horizontal
4	10614.8750	45.89	51.12	5.23	74.00	22.88	150	83	Horizontal
5	15921.0000	40.97	50.02	9.05	74.00	23.98	150	260	Horizontal
6	17989.0000	36.61	59.22	22.61	74.00	14.78	150	58	Horizontal

PK Final Data List					
NO.	Freq. [MHz]	Factor [dB]	Height [cm]	Angle [°]	Polarity
1	2499.6250	5.27	150	360	Horizontal
2	10624.4012	5.22	150	3.6	Horizontal
3	15960.8025	9.06	150	3.6	Horizontal
4	17989.0000	22.61	150	58	Horizontal

AV Final Data List									
NO.	Freq. [MHz]	Factor [dB]	AV Reading [dBμV/m]	AV Value [dBμV/m]	AV Limit [dBμV/m]	AV Margin [dB]	Height [cm]	Angle [°]	Polarity
1	2499.6250	5.27	34.82	40.09	54.00	13.91	150	360	Horizontal
2	10624.4012	5.22	32.81	38.03	54.00	15.97	150	3.6	Horizontal
3	15960.8025	9.06	30.99	40.05	54.00	13.95	150	3.6	Horizontal
4	17989.0000	22.61	24.27	46.88	54.00	7.12	150	58	Horizontal

Suspected Data List									
NO.	Freq. [MHz]	Reading [dBμV/m]	Level [dBμV/m]	Factor [dB]	Limit [dBμV/m]	Margin [dB]	Height [cm]	Angle [°]	Polarity
1	2500.0000	43.71	48.97	5.26	74.00	25.03	150	240	Vertical
2	5314.7500	93.71	109.75	16.04	68.30	-41.45	150	323	Vertical
3	6886.0000	37.03	56.79	19.76	68.30	11.51	150	300	Vertical
4	10619.6875	52.59	57.80	5.21	74.00	16.20	150	206	Vertical
5	15930.6250	45.89	54.94	9.05	74.00	19.06	150	197	Vertical
6	17971.1250	36.62	58.96	22.34	74.00	15.04	150	273	Vertical

PK Final Data List					
NO.	Freq. [MHz]	Factor [dB]	Height [cm]	Angle [°]	Polarity
1	2500.0000	5.26	150	240	Vertical
2	10620.0279	5.22	150	3.6	Vertical
3	15952.3254	9.05	150	3.6	Vertical
4	17971.1250	22.34	150	273	Vertical

AV Final Data List									
NO.	Freq. [MHz]	Factor [dB]	AV Reading [dBµV/m]	AV Value [dBµV/m]	AV Limit [dBµV/m]	AV Margin [dB]	Height [cm]	Angle [°]	Polarity
1	2500.0000	5.26	34.66	39.92	54.00	14.08	150	240	Vertical
2	10620.0279	5.22	33.77	38.99	54.00	15.01	150	3.6	Vertical
3	15952.3254	9.05	27.81	36.86	54.00	17.14	150	3.6	Vertical
4	17971.1250	22.34	24.26	46.60	54.00	7.40	150	273	Vertical

Mode: TX / IEEE 802.11n HT40(MIMO)
channel (5510MHz) Date: 2020/11/17

NO.	Freq. [MHz]	Reading [dBμV/m]	Level [dBμV/m]	Factor [dB]	Limit [dBμV/m]	Margin [dB]	Height [cm]	Angle [°]	Polarity
1	2500.0000	44.75	50.01	5.26	74.00	23.99	150	254	Horizontal
2	5514.6250	81.87	97.99	16.12	68.30	-29.69	150	262	Horizontal
3	6788.8750	37.02	56.94	19.92	68.30	11.36	150	25	Horizontal
4	11017.7500	44.25	50.48	6.23	74.00	23.52	150	70	Horizontal
5	15005.2500	39.59	50.28	10.69	68.30	18.02	150	70	Horizontal
6	17999.3125	37.32	60.08	22.76	74.00	13.92	150	82	Horizontal

PK Final Data List

NO.	Freq. [MHz]	Factor [dB]	Height [cm]	Angle [°]	Polarity
1	2500.0000	5.26	150	254	Horizontal
2	11026.4900	6.24	150	3.6	Horizontal
3	17999.3125	22.76	150	82	Horizontal

AV Final Data List

NO.	Freq. [MHz]	Factor [dB]	AV Reading [dBμV/m]	AV Value [dBμV/m]	AV Limit [dBμV/m]	AV Margin [dB]	Height [cm]	Angle [°]	Polarity
1	2500.0000	5.26	33.87	39.13	54.00	14.87	150	254	Horizontal
2	11026.4900	6.24	30.28	36.52	54.00	17.48	150	3.6	Horizontal
3	17999.3125	22.76	24.65	47.41	54.00	6.59	150	82	Horizontal

Suspected Data List

NO.	Freq. [MHz]	Reading [dBμV/m]	Level [dBμV/m]	Factor [dB]	Limit [dBμV/m]	Margin [dB]	Height [cm]	Angle [°]	Polarity
1	2500.0000	44.97	50.23	5.26	74.00	23.77	150	237	Vertical
2	5513.8750	92.56	108.68	16.12	68.30	-40.38	150	360	Vertical
3	6902.8750	37.63	57.35	19.72	68.30	10.95	150	29	Vertical
4	11020.5000	50.50	56.74	6.24	74.00	17.26	150	211	Vertical
5	16526.6875	40.21	49.68	9.47	68.30	18.62	150	110	Vertical
6	17938.1250	36.62	58.47	21.85	74.00	15.53	150	140	Vertical

PK Final Data List

NO.	Freq. [MHz]	Factor [dB]	Height [cm]	Angle [°]	Polarity
1	2500.0000	5.26	150	237	Vertical
2	11015.3783	6.24	150	3.6	Vertical
3	17938.1250	21.85	150	140	Vertical

AV Final Data List

NO.	Freq. [MHz]	Factor [dB]	AV Reading [dBμV/m]	AV Value [dBμV/m]	AV Limit [dBμV/m]	AV Margin [dB]	Height [cm]	Angle [°]	Polarity
1	2500.0000	5.26	33.31	38.57	54.00	15.43	150	237	Vertical
2	11015.3783	6.24	32.99	39.23	54.00	14.77	150	3.6	Vertical
3	17938.1250	21.85	24.45	46.30	54.00	7.70	150	140	Vertical