RF TEST REPORT

FCC ID: 2AV3B-SP5705

Product Name	:	Tablet
Test Model	:	SP5705
Brand Name	:	ADVANCE
Applicant	:	TECHNOSOURCE HK LIMITED
Address	:	2F, Building B, Sulandscape Industrial park, Shiyan Town, Bao an District, Shenzhen China
Date of Receipt	:	Jun. 26, 2024
Date of Test	:	Jun. 26, 2024 ~ July 08, 2024
Issued Date	:	July 08, 2024
Report Version	:	V1.0
Test Sample	:	Engineering Sample No.: AiTSZ-240626006-1
Standard(s)	:	FCC Part 22H & 24E Rules; ANSI C63.26:2015

Lab: B1/F, Building 11, Junfeng Industrial Park, Chongqing Road, Heping Community, Fuhai Street, Bao'an District, Shenzhen, Guangdong, China
Tel.: +86 0755-230967639 Fax.: +86 0755-230967639

This device described above has been tested by Guangdong Asia Hongke Test Technology Limited and the test results show that the equipment under test (EUT) is in compliance with the FCC requirements. And it is applicable only to the tested sample identified in the report.

Note: This report shall not be reproduced except in full, without the written approval of Guangdong Asia Hongke Test Technology Limited, this document may be altered or revised by Guangdong Asia Hongke Test Technology Limited, personal only, and shall be noted in the revision of the document. This test report must not be used by the client to claim product endorsement.

Reviewed by: Leon Yi
Leon.yi

Approved by: Sean She
Sean She

Table of Contents

1. General Information 4

Basic Description of Equipment Under Test 4
1.1 Technical Specification 5

2. Summary of Test Results 7

2.1 Application of Standard 7

3. General Test Frequency and Configuration 11

3.1 Test Modes 11
3.2 Test Frequency 11
3.3 Test Environment 13
3.4 Test Instruments 14
3.5 Measurement Uncertainty 15
3.6 Test Location 15
3.7 Deviation from Standards 15
3.8 Abnormalities from Standard Conditions 15

4. Test Setup and Conditions 16

4.1 Test Setup 1 16
4.2 Test Setup 2 16
4.3 Test Setup 3 17
Step 1: Pre-test 17
Step 2: Substitution method to verify the maximum ERP/EIRP 17
4.4 Test Conditions 18

5. Description of Tests 20

5.1 Effective (Isotropic) Radiated Power 20
5.2 Peak-Average Ratio 21
5.3 Occupied Bandwidth 22
5.4 Band Edge Compliance 23
5.5 Spurious and Harmonic Emissions at Antenna Terminal 24
5.6 Field Strength of Spurious Radiation 25
5.7 Frequency Stability / Temperature Variation 44

Revision History

Revision	Issue Date	Revisions	Revised By
V1.0	July 08, 2024	Initial Issue	Eder Zhan

1. General Information

Manufacturer	TECHNOSOURCE HK LIMITED
Address	2F, Building B, Sulandscape Industrial park, Shiyan Town, Bao an District, Shenzhen China
Product Designation	Tablet
Test Model	SP5705
Brand Name	ADVANCE
Serial model	N/A
Model Different	N/A
Power supply	Input: 100-240V~50/60Hz 0.45A Output: 5V⎓2000mA
Deviation	No any deviation from the test method.
Condition of Test Sample	Normal
Test Result	Pass

Note:

For a more detailed features description, please refer to the manufacturer’s specifications or the User's Manual.

Basic Description of Equipment Under Test

Antenna Type:	PIFA antenna	
Operating Temperature	-10~50℃	
Hardware Version	N/A	
Software Version	N/A	
EUT Stage	○Product Unit	●Final-Sample
Radio SystemType	LTE	
Operating Band	Band 2, Band 4, Band 7	

Note:

1.The measurement uncertainty is not included in the test result.

2.Antenna gain values are provided by the customer and are not claimed by the laboratory.

1.1 Technical Specification

Characteristics	Description	
Radio System Type	LTE	
Supported Frequency Range	LTE Band 2	Transmission (TX):1850 to 1910 MHz
		Receiving (RX):1930 to 1990 MHz
	LTE Band 4	Transmission (TX):1710 to 1755 MHz
		Receiving (RX):2110 to 2155 MHz
	LTE Band 7	Transmission (TX):2500MHz-2570MHz
		Receiving (RX):2620MHz-2690MHz
TX and RX Antenna Ports	TX & RX port:	1
	TX-only port:	0
	RX-only port:	1
ERP/EIRP TX Output Power	LTE Band 2:23.63dBm; LTE Band 4:23.26dBm; LTE Band 7:23.34dBm	
Antenna Gain:	LTE Band 2:1.73dBi; LTE Band 4:1.05dBi; LTE Band 7:1.39dBi	
Supported Channel Bandwidth	LTE Band 2	1.4 MHz, 3 MHz, 5 MHz,10 MHz,15 MHz, 20 MHz
	LTE Band 4	1.4 MHz, 3 MHz, 5 MHz, 10 MHz, 15 MHz, 20 MHz
	LTE Band 7	5 MHz, 10 MHz, 15 MHz, 20 MHz
Designation of Emissions (Note: the necessary bandwidth of which is the worst value from the measured occupied bandwidths for each type of channel bandwidth configuration.)	LTE Band 2:	1M15G7D (1.4 MHz QPSK modulation), 1M13W7D (1.4 MHz 16QAM modulation) 2M74G7D (3 MHz QPSK modulation), 2M74W7D (3 MHz 16QAM modulation) 4M57G7D (5 MHz QPSK modulation), 4M56W7D (5 MHz 16QAM modulation) 9M10G7D (10 MHz QPSK modulation), 9M09W7D (10 MHz 16QAM modulation) 13M6G7D (15 MHz QPSK modulation), 13M6W7D (15 MHz 16QAM modulation) 18M2G7D (20 MHz QPSK modulation), 18M2W7D (20 MHz 16QAM modulation)
Designation of Emissions (Note: the necessary bandwidth of which is the worst value from the measured occupied bandwidths for each type of channel bandwidth configuration.)	LTE Band 4:	1M11G7D (1.4 MHz QPSK modulation), 1M11W7D (1.4 MHz 16QAM modulation) 2M74G7D (3 MHz QPSK modulation), 2M73W7D (3 MHz 16QAM modulation) 4M56G7D (5 MHz QPSK modulation), 4M58W7D (5 MHz 16QAM modulation) 9M05G7D (10 MHz QPSK modulation), 9M04W7D (10 MHz 16QAM modulation) 13M5G7D (15 MHz QPSK modulation),

Characteristics	Description	
		13M5W7D (15 MHz 16QAM modulation) 18M0G7D (20 MHz QPSK modulation), 18M1W7D (20 MHz 16QAM modulation)
	LTE Band 7:	4M58G7D (5 MHz QPSK modulation), 4M64W7D (5 MHz 16QAM modulation) 9M14G7D (10 MHz QPSK modulation) 9M24G7D (10 MHz 16QAM modulation) 13M5G7D (15 MHz QPSK modulation), 13M5W7D (15 MHz 16QAM modulation) 18M0G7D (20 MHz QPSK modulation), 18M1W7D (20 MHz 16QAM modulation)

2. Summary of Test Results

2.1 Application of Standard

47 CFR FCC Part 2

47 CFR FCC Part 22/24/27

KDB 971168 D01 Power Meas License Digital Systems v03r01

ANSI C63.26:2015

Band2 (1850-1910MHz paired with 1930-1990MHz)

Test Item	FCC Rule No.	Requirements	Test Result	Verdict (Note1)
Effective (Isotropic) Radiated Power Output Data	Part 2.1046, 24.232	EIRP ≤ 2 W	Appendix LTE	Pass
Peak-Average Ratio	Part 2.1046, 24.232	Limit≤13 dB	Appendix LTE	Pass
Bandwidth	Part 2.1049	OBW: No limit. EBW: No limit.	Appendix LTE	Pass
Band Edges Compliance	Part 2.1051, 24.238	≤ -13 dBm/1%*EBW, in 1 MHz bands immediately outside and adjacent to the frequency block.	Appendix LTE	Pass
Spurious Emission at Antenna Terminals	Part 2.1051, 24.238	≤ -13 dBm/1 MHz, from 9 kHz to 10th harmonics but outside authorized operating frequency ranges.	Appendix LTE	Pass
Field Strength of Spurious Radiation	Part 2.1053, 24.238	≤ -13 dBm/1 MHz.	Appendix LTE	Pass
Frequency Stability	Part 2.1055, 24.235	≤ ± 2.5 ppm.	Appendix LTE	Pass
Note1: For the verdict, the “N/A” denotes “not applicable”, the “N/T” denotes “not tested”.				

Band4 (1710-1755MHz paired with 2110-2155MHz)

Test Item	FCC Rule No.	Requirements	Test Result	Verdict (Note1)
Effective(Isotropic) Radiated Power Output Data	Part 2.1046, 27.50(d)	EIRP ≤ 1W	Appendix LTE	Pass
Peak-Average Ratio	Part 2.1046, 27.50(d)	Limit≤13 dB	Appendix LTE	Pass
Bandwidth	Part 2.1049	OBW:No limit. EBW:No limit.	Appendix LTE	Pass
Band Edges Compliance	Part 2.1051, 27.53(h)	≤ -13 dBm/1%*EBW,in1MHz bands immediately outside and adjacent to the frequency block.	Appendix LTE	Pass
Spurious Emission at Antenna Terminals	Part 2.1051, 27.53(h)	≤ -13 dBm/1MHz,from9 kHz to 10th harmonics but out sideathorized operating frequency ranges.	Appendix LTE	Pass
Field Strength of Spurious Radiation	Part 2.1053, 27.53(h)	≤ -13 dBm/1MHz.	Appendix LTE	Pass
Frequency Stability	Part 2.1055, 27.54	≤ ±2.5ppm.	Appendix LTE	Pass
Note1: For the verdict, the“N/A”denotes“not applicable”,the“N/T”denotes“not tested”.				

Band7 (2500-2570 MHz paired with 2620-2690 MHz)

Test Item	FCC Rule No.	Requirements	Test Result	Verdict (Note1)
Effective(Isotropic) Radiated Power Output Data	Part 2.1046, 22.913(a)	EIRP ≤ 1W	Appendix LTE	Pass
Peak-Average Ratio	--	Limit≤13 dB	Appendix LTE	Pass
Bandwidth	Part 2.1049	OBW:No limit. EBW:No limit.	Appendix LTE	Pass
Band Edges Compliance	Part 2.1051, 22.917(a)	≤ -13 dBm/1%*EBW,in1MHz bands immediately outside and adjacent to the frequency block.	Appendix LTE	Pass
Spurious Emission at Antenna Terminals	Part 2.1051, 22.917(a)	≤ -13 dBm/1MHz,from9 kHz to 10th harmonics but out sideathorized operating frequency ranges.	Appendix LTE	Pass
Field Strength of Spurious Radiation	Part 2.1051,	≤ -13 dBm/1MHz.	Appendix LTE	Pass

	22.917(a)			
Frequency Stability	Part 2.1055, 22.355	≤ ±2.5ppm.	Appendix LTE	Pass
Note1: For the verdict, the“N/A”denotes“not applicable”,the“N/T”denotes“not tested”.				

Spurious Emission at Antenna Terminals	Part 2.1051, Part 27.53(c) Part 27.53(f)	FCC: ≤ -13 dBm/100 kHz, from 9 kHz to 10th harmonics but outside authorized operating frequency ranges. On all frequencies between 763–775 MHz and 793–805 MHz, by a factor not less than 65 + 10 log (P) dB in a 6.25 kHz band segment, for mobile and portable stations. For operations in the 746-758 MHz, 775-788 MHz, and 805-806 MHz bands, emissions in the band 1559-1610 MHz shall be limited to −70 dBW/MHz equivalent isotropically radiated power (EIRP) for wideband signals, and −80 dBW EIRP for discrete emissions of less than 700 Hz bandwidth.	Appendix LTE	
Field Strength of Spurious Radiation	Part 2.1053, Part 27.53(c) Part 27.53(f)	FCC: ≤ -13 dBm/100 kHz. For operations in the 746-758 MHz, 775-788 MHz, and 805-806 MHz bands, emissions in the band 1559-1610 MHz shall be limited to −70 dBW/MHz equivalent isotropically radiated power (EIRP) for wideband signals, and −80 dBW EIRP for discrete emissions of less than 700 Hz bandwidth.	Appendix LTE	
Frequency Stability	Part 2.1055 27.54	≤ ±2.5ppm.	Appendix LTE	

Modulation Characteristics	Part 2.1047	Digital modulation	Appendix LTE	
Note1: For the verdict, the “N/A” denotes “not applicable”, the “N/T” denotes “not tested”.				

3. General Test Frequency and Configuration

3.1 Test Modes

Test Mode	Test Modes Description
LTE/TM1	LTE system, QPSK modulation
LTE/TM2	LTE system, 16QAM modulation

3.2 Test Frequency

Band 2

Test Frequency ID	Bandwidth [MHz]	NUL	Frequency of Uplink [MHz]	NDL	Frequency of Downlink [MHz]
Low Range	1.4	18607	1850.7	607	1930.7
	3	18615	1851.5	615	1931.5
	5	18625	1852.5	625	1932.5
	10	18650	1855	650	1935
	15	18675	1857.5	675	1937.5
	20	18700	1860	700	1940
Mid Range	1.4/3/5/10/15/20	18900	1880	900	1960
High Range	1.4	19193	1909.3	1193	1989.3
	3	19185	1908.5	1185	1988.5
	5	19175	1907.5	1175	1987.5
	10	19150	1905	1150	1985
	15	19125	1902.5	1125	1982.5
	20	19100	1900	1100	1980

Band 4

Test Frequency ID	Bandwidth [MHz]	NUL	Frequency of Uplink [MHz]	NDL	Frequency of Downlink [MHz]
Low Range	1.4	19957	1710.7	1957	2110.7
	3	19965	1711.5	1965	2111.5
	5	19975	1712.5	1975	2112.5
	10	20000	1715	2000	2115
	15	20025	1717.5	2025	2117.5
	20	20050	1720	2050	2120
Mid Range	1.4/3/5/10/15/20	20175	1732.5	2175	2132.5
High Range	1.4	20393	1754.3	2393	2154.3
	3	20385	1753.5	2385	2153.5
	5	20375	1752.5	2375	2152.5
	10	20350	1750	2350	2150
	15	20325	1747.5	2325	2147.5
	20	20300	1745	2300	2145

Band 7

Test Frequency ID	Bandwidth [MHz]	NUL	Frequency of Uplink [MHz]	NDL	Frequency of Downlink [MHz]
Low Range	5	20775	2502.5	2775	2622.5
	10	20800	2505	2800	2625
	15	20825	2507.5	2825	2627.5
	20	20850	2510	2850	2630
Mid Range	5/10/15/20	21100	2535	3100	2655
High Range	5	21425	2567.5	3425	2687.5
	10	21400	2565	3400	2685
	15	21375	2562.5	3375	2682.5
	20	21350	2560	3350	2680

3.3 Test Environment

Applicable to	Environmental conditions	Input Power
Transmitter Conducted Power Output	24.5°C, 52 % RH	120Vac, 60Hz
Peak-Average Ratio	24.5°C, 52 % RH	120Vac, 60Hz
Modulation Characteristics	24.5°C, 52 % RH	120Vac, 60Hz
Bandwidth	24.5°C, 52 % RH	120Vac, 60Hz
Emission Mask	24.5°C, 52 % RH	120Vac, 60Hz
Spurious Emission at Antenna Terminals	24.5°C, 53 % RH	120Vac, 60Hz
Field Strength of Spurious Radiation	24.4°C, 53 % RH	120Vac, 60Hz
Frequency Stability	24.5°C, 52 % RH	120Vac, 60Hz

The applicant declare the operating environment of EUT as below:

Normal conditions: 3.87V DC,15°C ~35°C

Extreme conditions:3.483V DC~4.257V DC, -10°C ~50°C

VL= lower extreme test voltage, VN= nominal voltage, VH= upper extreme test voltage

TL= lower extreme test temperature, TN= normal temperature, TH= upper extreme test temperature

3.4 Test Instruments

No	Test Equipment	Manufacturer	Model No	Serial No	Cal. Date	Cal. Due Date
1	Spectrum Analyzer	R&S	FSV40	101470	2023.09.08	2024.09.07
2	Spectrum Analyzer	Keysight	N9020A	MY51280643	2023.09.08	2024.09.07
3	EMI Measuring Receiver	R&S	ESR	101660	2023.09.08	2024.09.07
4	Low Noise Pre-Amplifier	HP	HP8447E	1937A01855	2023.09.08	2024.09.07
5	Low Noise Pre-Amplifier	Tsj	MLA-0120-A02-34	2648A04738	2023.09.08	2024.09.07
6	Passive Loop	ETS	6512	00165355	2022.09.04	2024.09.03
7	TRILOG Super Broadband test Antenna	SCHWARZBECK	VULB9160	9160-3206	2021.08.29	2024.08.28
8	Broadband Horn Antenna	SCHWARZBECK	BBHA9120D	452	2021.08.29	2024.08.28
9	SHF-EHF Horn Antenna 15-40GHz	SCHWARZBECK	BBHA9170	BBHA9170367d	2021.08.29	2024.08.28
10	EMI Measuring Receiver	R&S	ESR	101160	2023.09.13	2024.09.12
11	LISN	SCHWARZBECK	NNLK 8129	8130179	2023.10.29	2024.10.28
12	Pulse Limiter	R&S	ESH3-Z2	102789	2023.09.13	2024.09.12
13	Pro.Temp&Humi.chamber	MENTEK	MHP-150-1C	MAA08112501	2023.09.08	2024.09.07
14	RF Automatic Test system	MW	MW100-RFCB	21033016	2023.09.08	2024.09.07
15	Signal Generator	Agilent	N5182A	MY50143009	2023.09.08	2024.09.07
16	Wideband Radio communication tester	R&S	CMW500	1201.0002K50	2023.09.08	2024.09.07
17	RF Automatic Test system	MW	MW100-RFCB	21033016	2023.09.08	2024.09.07
18	DC power supply	ZHAOXIN	RXN-305D-2	28070002559	N/A	N/A
19	RE Software	EZ	EZ-EMC_RE	Ver.AIT-03A	N/A	N/A
20	CE Software	EZ	EZ-EMC_CE	Ver.AIT-03A	N/A	N/A
21	RF Software	MW	MTS 8310	2.0.0.0	N/A	N/A
22	temporary antenna connector(Note)	NTS	R001	N/A	N/A	N/A
Note: The temporary antenna connector is soldered on the PCB board in order to perform conducted tests and this temporary antenna connector is listed in the equipment list.						

3.5 Measurement Uncertainty

Where relevant, the following measurement uncertainty levels have been estimated for tests performed on the EUT.
This uncertainty represents an expanded uncertainty expressed at approximately the 95% confidence level using a coverage factor of k=2.

Uncertainty	
Parameter	Uncertainty
Occupied Channel Bandwidth	±142.08KHz
RF power conducted	±0.74dB
Band Edge Compliance	±1.24dB
Frequency stability	±0.12 ppm
Spurious emissions, radiated (0.009MHz～30MHz)	3.10dB
Spurious emissions, radiated (30MHz～1GHz)	3.75dB
Spurious emissions, radiated (1GHz～18GHz)	3.88dB
Spurious emissions, radiated (18GHz ~ 40GHz)	3.88dB
Humidity	±4.0%
Temperature	±0.5°C
Time	±1.20%

3.6 Test Location

Company:	Guangdong Asia Hongke Test Technology Limited
Address:	B1/F, Building 11, Junfeng Industrial Park, Chongqing Road, Heping Community, Fuhai Street, Bao'an District, Shenzhen, Guangdong, China
A2LA Registration Number:	7133.01
FCC Accredited Lab. Designation Number:	CN1376
FCC Test Firm Registration Number:	251906

3.7 Deviation from Standards

None

3.8 Abnormalities from Standard Conditions

None

4. Test Setup and Conditions

4.1 Test Setup 1

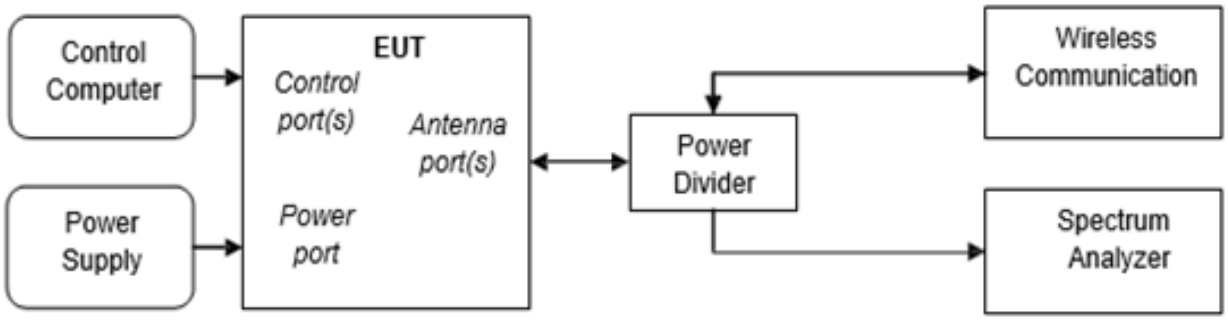

4.2 Test Setup 2

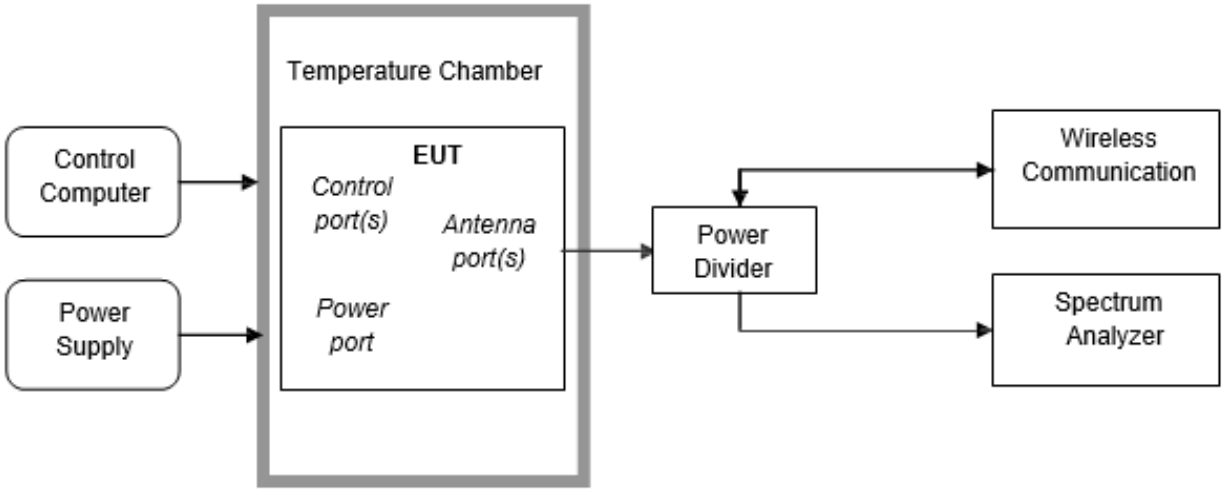

4.3 Test Setup 3

NOTE: Effective radiated power (ERP) and Equivalent Isotropic Radiated Power (EIRP) refers to the radiation power output of the EUT, assuming all emissions are radiated from half-wave dipole antennas.

Step 1: Pre-test

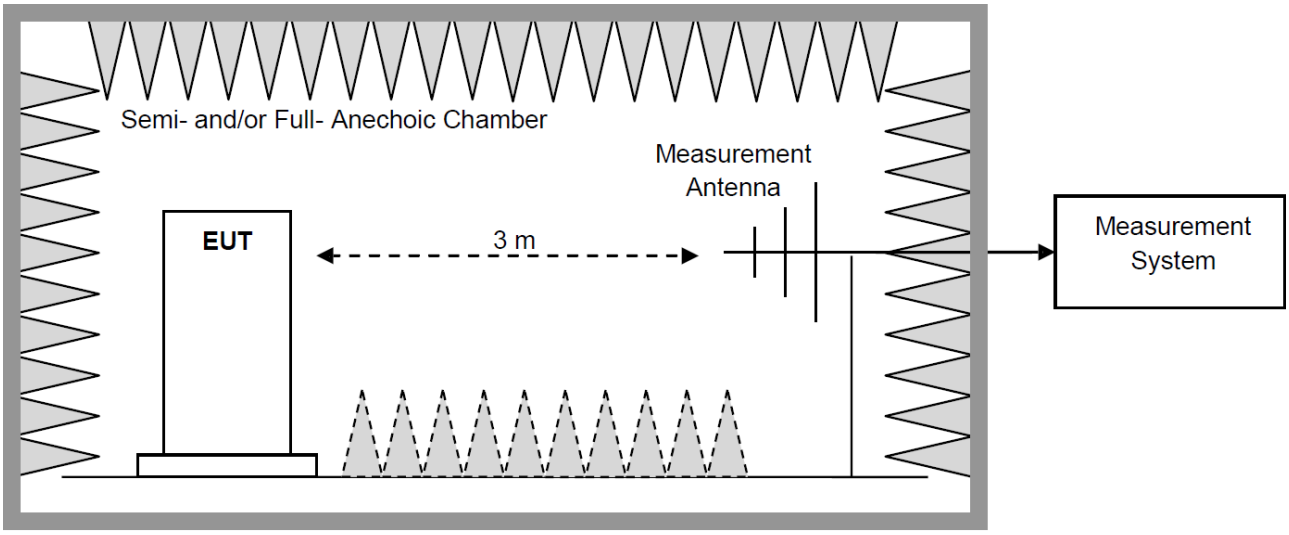

Step 2: Substitution method to verify the maximum ERP/EIRP

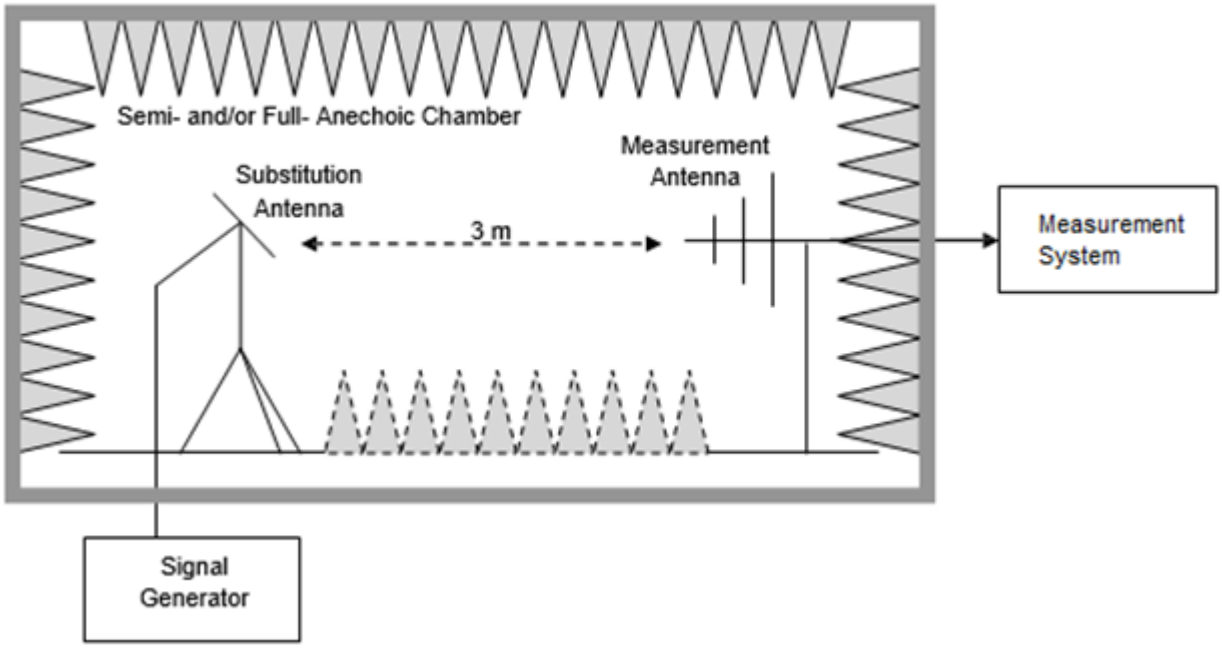

4.4 Test Conditions

Test Case		Test Conditions	
Transmit Output Power Data	Average Power, Total	Test Env.	Ambient Climate & Rated Voltage
		Test Setup	Test Setup 1
		RF Channels (TX)	L, M, H (L= low channel, M= middle channel, H= high channel)
		Test Mode	LTE/TM1, LTE/TM2
	Average Power, Spectral Density (if required)	Test Env.	Ambient Climate & Rated Voltage
		Test Setup	Test Setup 1
		RF Channels (TX)	L, M, H (L= low channel, M= middle channel, H= high channel)
		Test Mode	LTE/TM1,LTE/TM2
Peak-to-Average Ratio (if required)		Test Env.	Ambient Climate & Rated Voltage
		Test Setup	Test Setup 1
		RF Channels (TX)	L, M, H (L= low channel, M= middle channel, H= high channel)
		Test Mode	LTE/TM1,LTE/TM2
Bandwidth	Occupied Bandwidth	Test Env.	Ambient Climate & Rated Voltage
		Test Setup	Test Setup 1
		RF Channels (TX)	L, M, H (L= low channel, M= middle channel, H= high channel)
		Test Mode	LTE/TM1,LTE/TM2
	Emission Bandwidth (if required)	Test Env.	Ambient Climate & Rated Voltage
		Test Setup	Test Setup 1
		RF Channels (TX)	L, M, H (L= low channel, M= middle channel, H= high channel)
		Test Mode	LTE/TM1,LTE/TM2
Band Edges Compliance		Test Env.	Ambient Climate & Rated Voltage
		Test Setup	Test Setup 1
		RF Channels (TX)	L, H (L= low channel, M= middle channel, H= high channel)
		Test Mode	LTE/TM1,LTE/TM2
Spurious Emission at AntennaTerminals		Test Env.	Ambient Climate & Rated Voltage
		Test Setup	Test Setup 1
		RF Channels (TX)	L, M, H (L= low channel, M= middle channel, H= high channel)
		Test Mode	LTE/TM1,LTE/TM2
Field Strength of SpuriousRadiation		Test Env.	Ambient Climate & Rated Voltage
		Test Setup	Test Setup 3
		RF Channels (TX)	L, M, H (L= low channel, M= middle channel, H= high channel)
		Test Mode	LTE/TM1, LTE/TM2 NOTE: If applicable, the EUT conf. that has maximum

		power density (based on the equivalent power level) is selected.
Frequency Stability	Test Env.	(1) -30 °C to +50 °C with step 10 °C at Rated Voltage; (2) VL, VN and VH of Rated Voltage at Ambient Climate.
	Test Setup	Test Setup 2
	RF Channels (TX)	L, M, H (L= low channel, M= middle channel, H= high channel)
	Test Mode	LTE/TM1, LTE/TM2

5. Description of Tests

5.1 Effective (Isotropic) Radiated Power

A system simulator was used to establish communication with the EUT. Its parameters were set to enforce EUT transmitting at the maximum power. The measured power in the radio frequency on the transmitter output terminals shall be reported.

TRANSMITTER RADIATED POWER (EIRP/ERP)

Determining ERP and/or EIRP from conducted RF output power measurements according to ANSI C63.26 2015 Section 5.2.5.5.

In many cases, RF output power limits are specified in terms of the ERP or the EIRP. Typically, ERP is specified when the operating frequency is less than or equal to 1 GHz and EIRP is specified when the operating frequency is greater than 1 GHz. Both are defined as the product of the power supplied to the antenna and its gain (relative to a dipole antenna in the case of ERP, and relative to an isotropic antenna in the case of EIRP); however, when working in decibels (i.e., logarithmic scale), the ERP and EIRP represent the sum of the transmit antenna gain (in dBd or dBi, respectively) and the conducted RF output power (expressed in dB relative to watts or milliwatts).

The relevant equation for determining the maximum ERP or EIRP from the measured RF output power is given in Equation (1) as follows:

ERP or EIRP = PMeas + GT

ERP= EIRP-2.15

where

ERP or EIRP effective radiated power or equivalent isotropically radiated power, respectively (expressed in the same units as PMeas, e.g., dBm or dBW)

PMeas measured transmitter output power or PSD, in dBm or dBW

GT gain of the transmitting antenna, in dBd (ERP) or dBi (EIRP)

For devices utilizing multiple antennas, see 6.4 for guidance with respect to determining the effective array transmit antenna gain term to be used in the above equation.

The following equations demonstrate the mathematical relationship between ERP and EIRP:

a) ERP = EIRP − 2.15, where ERP and EIRP are expressed in consistent units.

b) EIRP = ERP + 2.15, where ERP and EIRP are expressed in consistent units.

Test Procedures Used

FCC KDB 971168 D01 V03r01 ; ANSI/ C63.26

Note: Reference test setup 3

Test Result

Please refer to AITSZ-240626006FW7_Appendix LTE.

5.2 Peak-Average Ratio

A peak to average ratio measurement is performed at the conducted port of the EUT. For WCDMA signals, the spectrum analyzers Complementary Cumulative Distribution Function (CCDF) measurement profile is used to determine the largest deviation between the average and the peak power of the EUT in a given bandwidth. The CCDF curve shows how much time the peak waveform spends at or above a given average power level. The percent of time the signal spends at or above the level defines the probability for that particular power level. For GSM signals, an average and a peak trace are used on a spectrum analyzer to determine the largest deviation between the average and the peak power of the EUT in a bandwidth greater than the emission bandwidth. The traces are generated with the spectrum analyzer set to zero span mode.

CCDF Procedure for PAPR :
1. Set resolution/measurement bandwidth ≥ signal’s occupied bandwidth;
2. Set the number of counts to a value that stabilizes the measured CCDF curve;
3. Set the measurement interval as follows:
-for continuous transmissions, set to 1 ms,
-or burst transmissions, employ an external trigger that is synchronized with the EUT burst timing sequence, or use the internal burst trigger with a trigger level that allows the burst to stabilize and set the measurement interval to a time
that is less than or equal to the burst duration.
4. Record the maximum PAPR level associated with a probability of 0.1%.

Test Procedures Used
FCC KDB 971168 D01 V03r01 Section 5.7.1
Note: Reference test setup 1

Test result

Please refer to AITSZ-240626006FW7_Appendix LTE.

5.3 Occupied Bandwidth

The occupied bandwidth, that is the frequency bandwidth such that, below its lower and above its upper frequency limits, the mean powers radiated are each equal to 0.5 percent of the total mean power radiated by a given emission shall be measured. The transmitter output was connected to a calibrated coaxial cable, attenuator and Spectrum analyser, the other end of which was connected to a Base Station Simulator. The Base Station Simulator was set to force the EUT to its maximum power setting. The tests were performed at three frequencies (low channel, middle channel and high channel).The span of the analyzer shall be set to capture all products of the modulation process, including the emission skirts. The resolution bandwidth shall be set to as close to 1 percent of the selected span as is possible without being below 1 percent. The video bandwidth shall be set to 3 times the resolution bandwidth. Video averaging is not permitted. Where practical, a sampling detector shall be used since a peak or, peak hold, may produce a wider bandwidth than actual. The trace data points are recovered and are directly summed in linear terms. The recovered amplitude data points, beginning at the lowest frequency, are placed in a running sum until 0.5 percent of the total is reached and that frequency recorded. The process is repeated for the highest frequency data points. This frequency is recorded. The span between the two recorded frequencies is the occupied bandwidth.

Test Procedures Used:

FCC KDB 971168 D01 V03r01 Section 4.2

Test Settings

1. The signal analyzer's automatic bandwidth measurement capability was used to perform the 99% occupied bandwidth and the 26dB bandwidth. The bandwidth measurement was not influenced by any intermediate power nulls in the fundamental emission.
2. RBW = 1 – 5% of the expected OBW
3. VBW ≥ 3 x RBW
4. Detector = Peak
5. Trace mode = max hold
6. Sweep = auto couple
7. The trace was allowed to stabilize
8. If necessary, steps 2 – 7 were repeated after changing the RBW such that it would be within 1 – 5% of the 99% occupied bandwidth observed in Step 7

Note: Reference test setup 1.

Test Result

Please refer to AITSZ-240626006FW7_Appendix LTE.

5.4 Band Edge Compliance

The transmitter output was connected to a calibrated coaxial cable, attenuator and Spectrum analyser, the other end of which was connected to a Base Station Simulator. The Base Station Simulator was set to force the EUT to its maximum power setting. The tests were performed at three frequencies (low channel and high channel).in the 1MHz bands immediately outside and adjacent to the frequency block a resolution bandwidth of 100kHz or 1% of the emission bandwidth of the fundamental emission of the transmitter may be employed. The EUT emission bandwidth is measured as the width of the signal between two points, outside of which all emission are attenuated at least 26dB below the transmitter power. The video bandwidth of the spectrum analyzer was set at thrice the resolution bandwidth. Detector Mode was set to peak or peak hold power.

Test Procedures Used

FCC KDB 971168 D01 V03r01 Section 6.0

1. Start and stop frequency were set such that the band edge would be placed in the center of the plot
2. Span was set large enough so as to capture all out of band emissions near the band edge
3. RBW > 1% of the emission bandwidth
4. VBW > 3 x RBW
5. Detector = RMS
6. Number of sweep points ⩾ 2 x Span/RBW
7. Trace mode = trace average
8. Sweep time > (number of points in sweep) × (symbol period)
9. Sweep =Single

Note: Reference test setup 1.

Test Result

Please refer to AITSZ-240626006FW7_Appendix LTE.

5.5 Spurious and Harmonic Emissions at Antenna Terminal

The transmitter output was connected to a calibrated coaxial cable, attenuator and Spectrum analyzer, the other end of which was connected to a Base Station Simulator. The Base Station Simulator was set to force the EUT to its maximum power setting. The tests were performed at three frequencies (low channel and high channel).The level of the carrier and the various conducted spurious and harmonic frequencies is measured by means of a calibrated spectrum analyzer. The spectrum is scanned from the lowest frequency generated in the equipment up to a frequency including its 10th harmonic. On any frequency outside a licensee's frequency block, the power of any emission shall be attenuated below the transmitter power (P) by at least 43 + 10 log(P) dB. Compliance with these provisions is based on the use of measurement instrumentation employing a resolution bandwidth of 1 MHz or greater. However, in the 1 MHz bands immediately outside and adjacent to the frequency block a resolution bandwidth of at least one percent of the emission bandwidth of the fundamental emission of the transmitter may be employed. The emission bandwidth is defined as the width of the signal between two points, one below the carrier center frequency and one above the carrier center frequency, outside of which all emission are attenuated at least 26 dB below the transmitter power.

Test Procedures Used

FCC KDB 971168 D01 V03r01

1. RBW = 1 MHz
2. VBW ⩾ 3 MHz
3. Detector = RMS
4. Trace Mode = Trace average
5. Sweep time > (number of points in sweep) × (symbol period)
6. Number of points in sweep ⩾ 2 x Span / RBW
7. Sweep =Single

Note: Reference test setup 1.

Test Result:

Please refer to AITSZ-240626006FW7_Appendix LTE.

5.6 Field Strength of Spurious Radiation

PROVISIONS APPLICABLE:

(A) On any frequency outside a licensee's frequency block (e.g. A, D, B, etc.) within the USPCS spectrum, the power of any emission shall be attenuated below the transmitter power (P, in Watts) by at least 43+10Log(P) dB. The specification that emissions shall be attenuated below the transmitter power (P) by at least 43 + 10 log (P) dB, translates in the relevant power range (1 to 0.001 W) to -13 dBm.

At 1 W the specified minimum attenuation becomes 43 dB and relative to a 30 dBm (1 W) carrier becomes a limit of -13 dBm. At 0.001 W (0 dBm) the minimum attenuation is 13 dB, which again yields a limit of -13 dBm. In this way a translation of the specification from relative to absolute terms is carried out.

(B) For specific criteria, please refer to the description in section 10.2 of the report for corresponding evaluation.

MEASUREMENT PROCEDURE:

1). The EUT was placed on the top of the turntable 0.8 or 1.5 meter above ground. The phase center of the receiving antenna mounted on the top of a height-variable antenna tower was placed 3 meters far away from the turntable.

2). Power on the EUT and all the supporting units. The turntable was rotated by 360 degrees to determine the position of the highest radiation.

3). The height of the broadband receiving antenna was varied between one meter and four meters above ground to find the maximum emissions field strength of both horizontal and vertical polarization.

4). For each suspected emissions, the antenna tower was scan (from 1 M to 4 M) and then the turntable was rotated (from 0 degree to 360 degrees) to find the maximum reading.

5). Set the test-receiver system to Peak or CISPR quasi-peak Detect Function with specified bandwidth under Maximum Hold Mode.

6). For emissions above 1GHz, use 1MHz VBW and RBW for peak reading. Then 1MHz RBW and 10Hz VBW for average reading in spectrum analyzer. Place the measurement antenna away from each area of the EUT determined to be a source of emissions at the specified measurement distance, while keeping the measurement antenna aimed at the source of emissions at each frequency of significant emissions, with polarization oriented for maximum response. The measurement antenna may have to be higher or lower than the EUT, depending on the radiation pattern of the emission and staying aimed at the emission source for receiving the maximum signal. The final measurement antenna elevation shall be that which maximizes the emissions. The measurement antenna elevation for maximum emissions shall be restricted to a range of heights of from 1 m to 4 m above the ground or reference ground plane.

7). When the radiated emissions limits are expressed in terms of the average value of the emissions, and pulsed operation is employed, the measurement field strength shall be determined by averaging over one complete pulse train, including blanking intervals, as long as the pulse train does not exceed 0.1 seconds. As an alternative (provided the transmitter operates for longer than 0.1 seconds) or in cases where the pulse train exceeds 0.1 seconds, the measured field strength shall be determined from the average absolute voltage during a 0.1 second interval during which the field strength is at its maximum values.

8).If the emissions level of the EUT in peak mode was 3 dB lower than the average limit specified, then testing will be stopped and peak values of EUT will be reported, otherwise, the emissions which do not have 3 dB margin will be repeated one by one using the quasi-peak method for below 1GHz.

9). For testing above 1GHz, the emissions level of the EUT in peak mode was lower than average limit

(that means the emissions level in peak mode also complies with the limit in average mode), then testing will be stopped and peak values of EUT will be reported, otherwise, the emissions will be measured in average mode again and reported.

10). In case the emission is lower than 30MHz, loop antenna has to be used for measurement and the recorded data should be QP measured by receiver. High - Low scan is not required in this case.

11). For spurious emissions above 1GHz, a horn antenna is substituted in place of the EUT.

The substitute antenna is drivenby a signal generator and the previously recorded signal was duplicated.

The spurious emissions is calculated by the following formula;

Result(dBm) = Pg(dBm) +Factor(dB)

Factor(dB) = Ant Gain(dB)-Cable Loss(dB) + Power Splitter(dB) (Above 1GHz)

Factor(dB) = Ant Gain(dB)-Cable Loss(dB) (Below 1GHz)

Where: Pgis the generator output power into the substitution antenna.

If the fundalmatal frequency is below 1GHz, RF output power has been converted to EIRP.

EIRP(dBm) = ERP(dBm) + 2.15

Examples of Factor parameters for testing radiation spurious:

FrequencyRange(MHz)	Factor(dB)
30-500	6.18
500-1000	9.37
1000-1500	27.56
1500-2000	28.27
2000-3000	29.45
3000-5000	30.15
5000-10000	31.26
10000-15000	32.78
15000-20000	33.99
Above 20GHz	35.04

Test Procedures Used

FCC KDB 971168 D01 V03r01; ANSI/ C63.10

Note: Reference test setup 3.

Test Result:

LTE Band 2 / 1.4MHz / QPSK / RB Size 1 Offset 0/ The Worst Test Results for Lowest							
Frequency(MHz)	S G.Lev (dBm)	Ant(dBi)	Loss	PMea (dBm)	Limit （dBm）	Margin (dBm)	Polarity
3701.27	-34.18	12.60	12.93	**-34.51**	-13.00	-21.51	H
5551.78	-34.85	13.10	17.11	-38.86	-13.00	-25.86	H
7402.39	-32.92	11.50	22.20	-43.62	-13.00	-30.62	H
3701.27	-35.69	12.60	12.93	-36.02	-13.00	-23.02	V
5551.78	-33.98	13.10	17.11	-37.99	-13.00	-24.99	V
7402.39	-31.73	11.50	22.20	-42.43	-13.00	-29.43	V
LTE Band 2 / 1.4MHz / QPSK / RB Size 1 Offset 0/ The Worst Test Results for Middle							
Frequency(MHz)	S G.Lev (dBm)	Ant(dBi)	Loss	PMea (dBm)	Limit （dBm）	Margin (dBm)	Polarity
3760.03	-34.12	12.60	12.93	**-34.45**	-13.00	-21.45	H
5639.98	-35.30	13.10	17.11	-39.31	-13.00	-26.31	H
7519.94	-33.01	11.50	22.20	-43.71	-13.00	-30.71	H
3760.03	-34.73	12.60	12.93	-35.06	-13.00	-22.06	V
5639.98	-34.99	13.10	17.11	-39.00	-13.00	-26.00	V
7519.94	-31.80	11.50	22.20	-42.50	-13.00	-29.50	V
LTE Band 2 / 1.4MHz / QPSK / RB Size 1 Offset 0/ The Worst Test Results for Highest							
Frequency(MHz)	S G.Lev (dBm)	Ant(dBi)	Loss	PMea (dBm)	Limit （dBm）	Margin (dBm)	Polarity
3818.26	-34.82	12.60	12.93	**-35.15**	-13.00	-22.15	H
5727.45	-35.03	13.10	17.11	-39.04	-13.00	-26.04	H
7636.92	-33.62	11.50	22.20	-44.32	-13.00	-31.32	H
3818.26	-35.77	12.60	12.93	-36.10	-13.00	-23.10	V
5727.45	-35.18	13.10	17.11	-39.19	-13.00	-26.19	V
7636.92	-32.52	11.50	22.20	-43.22	-13.00	-30.22	V

LTE Band 2 / 3MHz / QPSK / RB Size 1 Offset 0/ The Worst Test Results for Lowest							
Frequency(MHz)	S G.Lev (dBm)	Ant(dBi)	Loss	PMea (dBm)	Limit （dBm）	Margin (dBm)	Polarity
3703.11	-34.64	12.60	12.93	**-34.97**	-13.00	-21.97	H
5554.19	-34.53	13.10	17.11	-38.54	-13.00	-25.54	H
7405.99	-32.39	11.50	22.20	-43.09	-13.00	-30.09	H
3703.11	-35.42	12.60	12.93	-35.75	-13.00	-22.75	V
5554.19	-34.68	13.10	17.11	-38.69	-13.00	-25.69	V
7405.99	-32.29	11.50	22.20	-42.99	-13.00	-29.99	V
LTE Band 2 / 3MHz / QPSK / RB Size 1 Offset 0/ The Worst Test Results for Middle							
Frequency(MHz)	S G.Lev (dBm)	Ant(dBi)	Loss	PMea (dBm)	Limit （dBm）	Margin (dBm)	Polarity
3759.80	-34.34	12.60	12.93	**-34.67**	-13.00	-21.67	H
5640.16	-34.98	13.10	17.11	-38.99	-13.00	-25.99	H
7519.81	-32.89	11.50	22.20	-43.59	-13.00	-30.59	H
3759.80	-35.94	12.60	12.93	-36.27	-13.00	-23.27	V
5640.16	-35.13	13.10	17.11	-39.14	-13.00	-26.14	V
7519.81	-31.89	11.50	22.20	-42.59	-13.00	-29.59	V
LTE Band 2 / 3MHz / QPSK / RB Size 1 Offset 0/ The Worst Test Results for Highest							
Frequency(MHz)	S G.Lev (dBm)	Ant(dBi)	Loss	PMea (dBm)	Limit （dBm）	Margin (dBm)	Polarity
3816.94	-34.10	12.60	12.93	**-34.43**	-13.00	-21.43	H
5725.59	-34.30	13.10	17.11	-38.31	-13.00	-25.31	H
7634.29	-32.74	11.50	22.20	-43.44	-13.00	-30.44	H
3816.94	-35.43	12.60	12.93	-35.76	-13.00	-22.76	V
5725.59	-34.51	13.10	17.11	-38.52	-13.00	-25.52	V
7634.29	-32.75	11.50	22.20	-43.45	-13.00	-30.45	V

LTE Band 2 / 5MHz / QPSK / RB Size 1 Offset 0/ The Worst Test Results for Lowest							
Frequency(MHz)	S G.Lev (dBm)	Ant(dBi)	Loss	PMea (dBm)	Limit （dBm）	Margin (dBm)	Polarity
3705.43	-33.87	12.60	12.93	**-34.20**	-13.00	-21.20	H
5557.45	-35.00	13.10	17.11	-39.01	-13.00	-26.01	H
7409.97	-33.09	11.50	22.20	-43.79	-13.00	-30.79	H
3705.43	-34.79	12.60	12.93	-35.12	-13.00	-22.12	V
5557.45	-34.28	13.10	17.11	-38.29	-13.00	-25.29	V
7409.97	-33.09	11.50	22.20	-43.79	-13.00	-30.79	V

LTE Band 2 / 5MHz / QPSK / RB Size 1 Offset 0/ The Worst Test Results for Middle							
Frequency(MHz)	S G.Lev (dBm)	Ant(dBi)	Loss	PMea (dBm)	Limit （dBm）	Margin (dBm)	Polarity
3760.14	-34.44	12.60	12.93	**-34.77**	-13.00	-21.77	H
5640.04	-34.30	13.10	17.11	-38.31	-13.00	-25.31	H
7519.82	-32.74	11.50	22.20	-43.44	-13.00	-30.44	H
3760.14	-35.03	12.60	12.93	-35.36	-13.00	-22.36	V
5640.04	-35.18	13.10	17.11	-39.19	-13.00	-26.19	V
7519.82	-32.15	11.50	22.20	-42.85	-13.00	-29.85	V

LTE Band 2 / 5MHz / QPSK / RB Size 1 Offset 0/ The Worst Test Results for Highest							
Frequency(MHz)	S G.Lev (dBm)	Ant(dBi)	Loss	PMea (dBm)	Limit （dBm）	Margin (dBm)	Polarity
3815.02	-34.72	12.60	12.93	**-35.05**	-13.00	-22.05	H
5722.45	-34.82	13.10	17.11	-38.83	-13.00	-25.83	H
7630.06	-32.16	11.50	22.20	-42.86	-13.00	-29.86	H
3815.02	-34.89	12.60	12.93	-35.22	-13.00	-22.22	V
5722.45	-33.94	13.10	17.11	-37.95	-13.00	-24.95	V
7630.06	-32.46	11.50	22.20	-43.16	-13.00	-30.16	V

LTE Band 2 / 10MHz / QPSK / RB Size 1 Offset 0/ The Worst Test Results for Lowest							
Frequency(MHz)	S G.Lev (dBm)	Ant(dBi)	Loss	PMea (dBm)	Limit （dBm）	Margin (dBm)	Polarity
3710.33	-34.18	12.60	12.93	**-34.51**	-13.00	-21.51	H
5565.01	-34.98	13.10	17.11	-38.99	-13.00	-25.99	H
7419.96	-33.10	11.50	22.20	-43.80	-13.00	-30.80	H
3710.33	-35.33	12.60	12.93	-35.66	-13.00	-22.66	V
5565.01	-33.77	13.10	17.11	-37.78	-13.00	-24.78	V
7419.96	-32.54	11.50	22.20	-43.24	-13.00	-30.24	V
LTE Band 2 / 10MHz / QPSK / RB Size 1 Offset 0/ The Worst Test Results for Middle							
Frequency(MHz)	S G.Lev (dBm)	Ant(dBi)	Loss	PMea (dBm)	Limit （dBm）	Margin (dBm)	Polarity
3760.08	-33.56	12.60	12.93	**-33.89**	-13.00	-20.89	H
5639.91	-35.46	13.10	17.11	-39.47	-13.00	-26.47	H
7520.05	-33.24	11.50	22.20	-43.94	-13.00	-30.94	H
3760.08	-35.36	12.60	12.93	-35.69	-13.00	-22.69	V
5639.91	-34.29	13.10	17.11	-38.30	-13.00	-25.30	V
7520.05	-32.79	11.50	22.20	-43.49	-13.00	-30.49	V
LTE Band 2 / 10MHz / QPSK / RB Size 1 Offset 0/ The Worst Test Results for Highest							
Frequency(MHz)	S G.Lev (dBm)	Ant(dBi)	Loss	PMea (dBm)	Limit （dBm）	Margin (dBm)	Polarity
3810.12	-34.80	12.60	12.93	**-35.13**	-13.00	-22.13	H
5715.03	-34.72	13.10	17.11	-38.73	-13.00	-25.73	H
7619.95	-33.32	11.50	22.20	-44.02	-13.00	-31.02	H
3810.12	-34.89	12.60	12.93	-35.22	-13.00	-22.22	V
5715.03	-34.31	13.10	17.11	-38.32	-13.00	-25.32	V
7619.95	-32.29	11.50	22.20	-42.99	-13.00	-29.99	V

LTE Band 2 / 15MHz / QPSK / RB Size 1 Offset 0/ The Worst Test Results for Lowest							
Frequency(MHz)	S G.Lev (dBm)	Ant(dBi)	Loss	PMea (dBm)	Limit （dBm）	Margin (dBm)	Polarity
3715.10	-33.78	12.60	12.93	**-34.11**	-13.00	-21.11	H
5572.29	-35.24	13.10	17.11	-39.25	-13.00	-26.25	H
7430.55	-33.38	11.50	22.20	-44.08	-13.00	-31.08	H
3715.10	-35.73	12.60	12.93	-36.06	-13.00	-23.06	V
5572.29	-34.76	13.10	17.11	-38.77	-13.00	-25.77	V
7430.55	-32.27	11.50	22.20	-42.97	-13.00	-29.97	V

LTE Band 2 / 15MHz / QPSK / RB Size 1 Offset 0/ The Worst Test Results for Middle							
Frequency(MHz)	S G.Lev (dBm)	Ant(dBi)	Loss	PMea (dBm)	Limit （dBm）	Margin (dBm)	Polarity
3759.97	-33.49	12.60	12.93	**-33.82**	-13.00	-20.82	H
5639.88	-35.41	13.10	17.11	-39.42	-13.00	-26.42	H
7519.96	-33.14	11.50	22.20	-43.84	-13.00	-30.84	H
3759.97	-34.91	12.60	12.93	-35.24	-13.00	-22.24	V
5639.88	-34.79	13.10	17.11	-38.80	-13.00	-25.80	V
7519.96	-32.64	11.50	22.20	-43.34	-13.00	-30.34	V

LTE Band 2 / 15MHz / QPSK / RB Size 1 Offset 0/ The Worst Test Results for Highest							
Frequency(MHz)	S G.Lev (dBm)	Ant(dBi)	Loss	PMea (dBm)	Limit （dBm）	Margin (dBm)	Polarity
3804.98	-34.24	12.60	12.93	**-34.57**	-13.00	-21.57	H
5707.36	-34.43	13.10	17.11	-38.44	-13.00	-25.44	H
7609.84	-33.23	11.50	22.20	-43.93	-13.00	-30.93	H
3804.98	-34.76	12.60	12.93	-35.09	-13.00	-22.09	V
5707.36	-34.04	13.10	17.11	-38.05	-13.00	-25.05	V
7609.84	-32.69	11.50	22.20	-43.39	-13.00	-30.39	V

LTE Band 2 / 20MHz / QPSK / RB Size 1 Offset 0/ The Worst Test Results for Lowest							
Frequency(MHz)	S G.Lev (dBm)	Ant(dBi)	Loss	PMea (dBm)	Limit （dBm）	Margin (dBm)	Polarity
3720.40	-33.48	12.60	12.93	**-33.81**	-13.00	-20.81	H
5580.34	-34.35	13.10	17.11	-38.36	-13.00	-25.36	H
7440.04	-33.57	11.50	22.20	-44.27	-13.00	-31.27	H
3720.40	-35.38	12.60	12.93	-35.71	-13.00	-22.71	V
5580.34	-34.17	13.10	17.11	-38.18	-13.00	-25.18	V
7440.04	-33.06	11.50	22.20	-43.76	-13.00	-30.76	V
LTE Band 2 / 20MHz / QPSK / RB Size 1 Offset 0/ The Worst Test Results for Middle							
Frequency(MHz)	S G.Lev (dBm)	Ant(dBi)	Loss	PMea (dBm)	Limit （dBm）	Margin (dBm)	Polarity
3760.01	-34.01	12.60	12.93	**-34.34**	-13.00	-21.34	H
5640.22	-34.00	13.10	17.11	-38.01	-13.00	-25.01	H
7520.22	-32.42	11.50	22.20	-43.12	-13.00	-30.12	H
3760.01	-35.69	12.60	12.93	-36.02	-13.00	-23.02	V
5640.22	-34.71	13.10	17.11	-38.72	-13.00	-25.72	V
7520.22	-31.88	11.50	22.20	-42.58	-13.00	-29.58	V
LTE Band 2 / 20MHz / QPSK / RB Size 1 Offset 0/ The Worst Test Results for Highest							
Frequency(MHz)	S G.Lev (dBm)	Ant(dBi)	Loss	PMea (dBm)	Limit （dBm）	Margin (dBm)	Polarity
3799.82	-33.92	12.60	12.93	**-34.25**	-13.00	-21.25	H
5699.92	-34.73	13.10	17.11	-38.74	-13.00	-25.74	H
7599.99	-32.17	11.50	22.20	-42.87	-13.00	-29.87	H
3799.82	-35.55	12.60	12.93	-35.88	-13.00	-22.88	V
5699.92	-33.75	13.10	17.11	-37.76	-13.00	-24.76	V
7599.99	-32.25	11.50	22.20	-42.95	-13.00	-29.95	V

LTE Band 4 / 1.4MHz / QPSK / RB Size 1 Offset 0/ The Worst Test Results for Lowest							
Frequency(MHz)	S G.Lev (dBm)	Ant(dBi)	Loss	PMea (dBm)	Limit （dBm）	Margin (dBm)	Polarity
3421.31	-33.81	12.90	12.56	**-33.47**	-13.00	-20.47	H
5131.83	-34.13	13.10	16.32	-37.35	-13.00	-24.35	H
6842.77	-33.32	12.33	21.13	-42.12	-13.00	-29.12	H
3421.31	-35.71	12.90	12.56	-35.37	-13.00	-22.37	V
5131.83	-34.18	13.10	16.32	-37.40	-13.00	-24.40	V
6842.77	-32.99	12.33	21.13	-41.79	-13.00	-28.79	V
LTE Band 4 / 1.4MHz / QPSK / RB Size 1 Offset 0/ The Worst Test Results for Middle							
Frequency(MHz)	S G.Lev (dBm)	Ant(dBi)	Loss	PMea (dBm)	Limit （dBm）	Margin (dBm)	Polarity
3464.89	-33.48	12.90	12.56	**-33.14**	-13.00	-20.14	H
5196.55	-34.77	13.10	16.32	-37.99	-13.00	-24.99	H
6930.01	-32.66	12.33	21.13	-41.46	-13.00	-28.46	H
3464.89	-34.78	12.90	12.56	-34.44	-13.00	-21.44	V
5196.55	-34.03	13.10	16.32	-37.25	-13.00	-24.25	V
6930.01	-32.24	12.33	21.13	-41.04	-13.00	-28.04	V
LTE Band 4 / 1.4MHz / QPSK / RB Size 1 Offset 0/ The Worst Test Results for Highest							
Frequency(MHz)	S G.Lev (dBm)	Ant(dBi)	Loss	PMea (dBm)	Limit （dBm）	Margin (dBm)	Polarity
3508.13	-33.55	12.90	12.56	**-33.21**	-13.00	-20.21	H
5262.20	-35.04	13.10	16.32	-38.26	-13.00	-25.26	H
7015.45	-32.81	12.33	21.13	-41.61	-13.00	-28.61	H
3508.13	-35.11	12.90	12.56	-34.77	-13.00	-21.77	V
5262.20	-34.84	13.10	16.32	-38.06	-13.00	-25.06	V
7015.45	-32.89	12.33	21.13	-41.69	-13.00	-28.69	V

LTE Band 4 / 3MHz / QPSK / RB Size 1 Offset 0/ The Worst Test Results for Lowest							
Frequency(MHz)	S G.Lev (dBm)	Ant(dBi)	Loss	PMea (dBm)	Limit （dBm）	Margin (dBm)	Polarity
3424.06	-34.15	12.90	12.56	**-33.81**	-13.00	-20.81	H
5136.19	-35.10	13.10	16.32	-38.32	-13.00	-25.32	H
6848.50	-33.41	12.33	21.13	-42.21	-13.00	-29.21	H
3424.06	-35.30	12.90	12.56	-34.96	-13.00	-21.96	V
5136.19	-34.78	13.10	16.32	-38.00	-13.00	-25.00	V
6848.50	-31.96	12.33	21.13	-40.76	-13.00	-27.76	V
LTE Band 4 / 3MHz / QPSK / RB Size 1 Offset 0/ The Worst Test Results for Middle							
Frequency(MHz)	S G.Lev (dBm)	Ant(dBi)	Loss	PMea (dBm)	Limit （dBm）	Margin (dBm)	Polarity
3464.73	-33.95	12.90	12.56	**-33.61**	-13.00	-20.61	H
5196.65	-34.34	13.10	16.32	-37.56	-13.00	-24.56	H
6929.84	-33.11	12.33	21.13	-41.91	-13.00	-28.91	H
3464.73	-35.21	12.90	12.56	-34.87	-13.00	-21.87	V
5196.65	-35.08	13.10	16.32	-38.30	-13.00	-25.30	V
6929.84	-31.83	12.33	21.13	-40.63	-13.00	-27.63	V
LTE Band 4 / 3MHz / QPSK / RB Size 1 Offset 0/ The Worst Test Results for Highest							
Frequency(MHz)	S G.Lev (dBm)	Ant(dBi)	Loss	PMea (dBm)	Limit （dBm）	Margin (dBm)	Polarity
3506.29	-34.17	12.90	12.56	**-33.83**	-13.00	-20.83	H
5261.77	-34.81	13.10	16.32	-38.03	-13.00	-25.03	H
7012.66	-33.51	12.33	21.13	-42.31	-13.00	-29.31	H
3506.29	-35.83	12.90	12.56	-35.49	-13.00	-22.49	V
5261.77	-34.89	13.10	16.32	-38.11	-13.00	-25.11	V
7012.66	-32.15	12.33	21.13	-40.95	-13.00	-27.95	V

LTE Band 4 / 5MHz / QPSK / RB Size 1 Offset 0/ The Worst Test Results for Lowest							
Frequency(MHz)	S G.Lev (dBm)	Ant(dBi)	Loss	PMea (dBm)	Limit （dBm）	Margin (dBm)	Polarity
3424.61	-33.91	12.90	12.56	**-33.57**	-13.00	-20.57	H
5137.15	-35.22	13.10	16.32	-38.44	-13.00	-25.44	H
6849.68	-32.75	12.33	21.13	-41.55	-13.00	-28.55	H
3424.61	-35.87	12.90	12.56	-35.53	-13.00	-22.53	V
5137.15	-35.25	13.10	16.32	-38.47	-13.00	-25.47	V
6849.68	-32.76	12.33	21.13	-41.56	-13.00	-28.56	V

LTE Band 4 / 5MHz / QPSK / RB Size 1 Offset 0/ The Worst Test Results for Middle							
Frequency(MHz)	S G.Lev (dBm)	Ant(dBi)	Loss	PMea (dBm)	Limit （dBm）	Margin (dBm)	Polarity
3464.72	-33.47	12.90	12.56	**-33.13**	-13.00	-20.13	H
5196.64	-34.46	13.10	16.32	-37.68	-13.00	-24.68	H
6929.73	-32.52	12.33	21.13	-41.32	-13.00	-28.32	H
3464.72	-35.57	12.90	12.56	-35.23	-13.00	-22.23	V
5196.64	-35.00	13.10	16.32	-38.22	-13.00	-25.22	V
6929.73	-32.32	12.33	21.13	-41.12	-13.00	-28.12	V

LTE Band 4 / 5MHz / QPSK / RB Size 1 Offset 0/ The Worst Test Results for Highest							
Frequency(MHz)	S G.Lev (dBm)	Ant(dBi)	Loss	PMea (dBm)	Limit （dBm）	Margin (dBm)	Polarity
3505.26	-34.49	12.90	12.56	**-34.15**	-13.00	-21.15	H
5256.96	-35.49	13.10	16.32	-38.71	-13.00	-25.71	H
7009.95	-33.09	12.33	21.13	-41.89	-13.00	-28.89	H
3505.26	-34.78	12.90	12.56	-34.44	-13.00	-21.44	V
5256.96	-34.34	13.10	16.32	-37.56	-13.00	-24.56	V
7009.95	-32.44	12.33	21.13	-41.24	-13.00	-28.24	V

LTE Band 4 / 10MHz / QPSK / RB Size 1 Offset 0/ The Worst Test Results for Lowest							
Frequency(MHz)	S G.Lev (dBm)	Ant(dBi)	Loss	PMea (dBm)	Limit （dBm）	Margin (dBm)	Polarity
3429.78	-33.87	12.90	12.56	**-33.53**	-13.00	-20.53	H
5145.37	-35.42	13.10	16.32	-38.64	-13.00	-25.64	H
6860.30	-33.58	12.33	21.13	-42.38	-13.00	-29.38	H
3429.78	-35.01	12.90	12.56	-34.67	-13.00	-21.67	V
5145.37	-34.07	13.10	16.32	-37.29	-13.00	-24.29	V
6860.30	-31.81	12.33	21.13	-40.61	-13.00	-27.61	V
LTE Band 4 / 10MHz / QPSK / RB Size 1 Offset 0/ The Worst Test Results for Middle							
Frequency(MHz)	S G.Lev (dBm)	Ant(dBi)	Loss	PMea (dBm)	Limit （dBm）	Margin (dBm)	Polarity
3464.43	-34.26	12.90	12.56	**-33.92**	-13.00	-20.92	H
5196.52	-34.69	13.10	16.32	-37.91	-13.00	-24.91	H
6929.37	-33.39	12.33	21.13	-42.19	-13.00	-29.19	H
3464.43	-35.77	12.90	12.56	-35.43	-13.00	-22.43	V
5196.52	-34.68	13.10	16.32	-37.90	-13.00	-24.90	V
6929.37	-32.02	12.33	21.13	-40.82	-13.00	-27.82	V
LTE Band 4 / 10MHz / QPSK / RB Size 1 Offset 0/ The Worst Test Results for Highest							
Frequency(MHz)	S G.Lev (dBm)	Ant(dBi)	Loss	PMea (dBm)	Limit （dBm）	Margin (dBm)	Polarity
3500.27	-33.94	12.90	12.56	**-33.60**	-13.00	-20.60	H
5250.03	-35.23	13.10	16.32	-38.45	-13.00	-25.45	H
6999.95	-33.29	12.33	21.13	-42.09	-13.00	-29.09	H
3500.27	-35.72	12.90	12.56	-35.38	-13.00	-22.38	V
5250.03	-34.13	13.10	16.32	-37.35	-13.00	-24.35	V
6999.95	-32.71	12.33	21.13	-41.51	-13.00	-28.51	V

LTE Band 4 / 15MHz / QPSK / RB Size 1 Offset 0/ The Worst Test Results for Lowest							
Frequency(MHz)	S G.Lev (dBm)	Ant(dBi)	Loss	PMea (dBm)	Limit （dBm）	Margin (dBm)	Polarity
3434.79	-33.70	12.90	12.56	**-33.36**	-13.00	-20.36	H
5152.63	-34.04	13.10	16.32	-37.26	-13.00	-24.26	H
6870.71	-32.43	12.33	21.13	-41.23	-13.00	-28.23	H
3434.79	-35.71	12.90	12.56	-35.37	-13.00	-22.37	V
5152.63	-35.21	13.10	16.32	-38.43	-13.00	-25.43	V
6870.71	-33.13	12.33	21.13	-41.93	-13.00	-28.93	V
LTE Band 4 / 15MHz / QPSK / RB Size 1 Offset 0/ The Worst Test Results for Middle							
Frequency(MHz)	S G.Lev (dBm)	Ant(dBi)	Loss	PMea (dBm)	Limit （dBm）	Margin (dBm)	Polarity
3464.85	-33.93	12.90	12.56	**-33.59**	-13.00	-20.59	H
5196.61	-34.51	13.10	16.32	-37.73	-13.00	-24.73	H
6930.09	-32.43	12.33	21.13	-41.23	-13.00	-28.23	H
3464.85	-34.57	12.90	12.56	-34.23	-13.00	-21.23	V
5196.61	-34.89	13.10	16.32	-38.11	-13.00	-25.11	V
6930.09	-32.52	12.33	21.13	-41.32	-13.00	-28.32	V
LTE Band 4 / 15MHz / QPSK / RB Size 1 Offset 0/ The Worst Test Results for Highest							
Frequency(MHz)	S G.Lev (dBm)	Ant(dBi)	Loss	PMea (dBm)	Limit （dBm）	Margin (dBm)	Polarity
3495.46	-34.37	12.90	12.56	**-34.03**	-13.00	-21.03	H
5242.24	-34.45	13.10	16.32	-37.67	-13.00	-24.67	H
6989.90	-32.93	12.33	21.13	-41.73	-13.00	-28.73	H
3495.46	-34.82	12.90	12.56	-34.48	-13.00	-21.48	V
5242.24	-34.74	13.10	16.32	-37.96	-13.00	-24.96	V
6989.90	-32.90	12.33	21.13	-41.70	-13.00	-28.70	V

LTE Band 4 / 20MHz / QPSK / RB Size 1 Offset 0/ The Worst Test Results for Lowest							
Frequency(MHz)	S G.Lev (dBm)	Ant(dBi)	Loss	PMea (dBm)	Limit （dBm）	Margin (dBm)	Polarity
3440.04	-34.83	12.90	12.56	**-34.49**	-13.00	-21.49	H
5160.08	-35.41	13.10	16.32	-38.63	-13.00	-25.63	H
6880.73	-32.60	12.33	21.13	-41.40	-13.00	-28.40	H
3440.04	-35.04	12.90	12.56	-34.70	-13.00	-21.70	V
5160.08	-33.79	13.10	16.32	-37.01	-13.00	-24.01	V
6880.73	-32.58	12.33	21.13	-41.38	-13.00	-28.38	V
LTE Band 4 / 20MHz / QPSK / RB Size 1 Offset 0/ The Worst Test Results for Middle							
Frequency(MHz)	S G.Lev (dBm)	Ant(dBi)	Loss	PMea (dBm)	Limit （dBm）	Margin (dBm)	Polarity
3464.62	-34.47	12.90	12.56	**-34.13**	-13.00	-21.13	H
5196.33	-34.60	13.10	16.32	-37.82	-13.00	-24.82	H
6929.70	-33.24	12.33	21.13	-42.04	-13.00	-29.04	H
3464.62	-35.69	12.90	12.56	-35.35	-13.00	-22.35	V
5196.33	-34.15	13.10	16.32	-37.37	-13.00	-24.37	V
6929.70	-32.92	12.33	21.13	-41.72	-13.00	-28.72	V
LTE Band 4 / 20MHz / QPSK / RB Size 1 Offset 0/ The Worst Test Results for Highest							
Frequency(MHz)	S G.Lev (dBm)	Ant(dBi)	Loss	PMea (dBm)	Limit （dBm）	Margin (dBm)	Polarity
3490.25	-34.41	12.90	12.56	**-34.07**	-13.00	-21.07	H
5235.26	-34.19	13.10	16.32	-37.41	-13.00	-24.41	H
6979.65	-32.78	12.33	21.13	-41.58	-13.00	-28.58	H
3490.25	-34.85	12.90	12.56	-34.51	-13.00	-21.51	V
5235.26	-34.94	13.10	16.32	-38.16	-13.00	-25.16	V
6979.65	-31.82	12.33	21.13	-40.62	-13.00	-27.62	V

LTE Band 7 / 5MHz / QPSK / RB Size 1 Offset 0/ The Worst Test Results for Lowest							
Frequency(MHz)	S G.Lev (dBm)	Ant(dBi)	Loss	PMea (dBm)	Limit （dBm）	Margin (dBm)	Polarity
5005.08	-34.04	12.66	15.86	**-37.24**	-25.00	-12.24	H
7507.80	-34.03	11.46	19.28	-41.85	-25.00	-16.85	H
#######	-33.26	12.79	23.19	-43.66	-25.00	-18.66	H
5005.08	-35.28	12.66	15.86	-38.48	-25.00	-13.48	V
7507.80	-35.11	11.46	19.28	-42.93	-25.00	-17.93	V
#######	-32.26	12.79	23.19	-42.66	-25.00	-17.66	V

LTE Band 7 / 5MHz / QPSK / RB Size 1 Offset 0/ The Worst Test Results for Middle							
Frequency(MHz)	S G.Lev (dBm)	Ant(dBi)	Loss	PMea (dBm)	Limit （dBm）	Margin (dBm)	Polarity
5069.74	-34.79	12.72	15.86	**-37.93**	-25.00	-12.93	H
7604.80	-34.91	11.46	19.28	-42.73	-25.00	-17.73	H
#######	-33.19	12.09	23.19	-44.29	-25.00	-19.29	H
5069.74	-35.63	12.72	15.86	-38.77	-25.00	-13.77	V
7604.80	-34.86	11.46	19.28	-42.68	-25.00	-17.68	V
#######	-32.53	12.09	23.19	-43.63	-25.00	-18.63	V

LTE Band 7 / 5MHz / QPSK / RB Size 1 Offset 0/ The Worst Test Results for Highest							
Frequency(MHz)	S G.Lev (dBm)	Ant(dBi)	Loss	PMea (dBm)	Limit （dBm）	Margin (dBm)	Polarity
5133.97	-34.82	12.76	15.86	**-37.92**	-25.00	-12.92	H
7701.35	-35.14	11.45	19.28	-42.97	-25.00	-17.97	H
#######	-32.65	12.28	23.19	-43.56	-25.00	-18.56	H
5133.97	-35.71	12.76	15.86	-38.81	-25.00	-13.81	V
7701.35	-35.20	11.45	19.28	-43.03	-25.00	-18.03	V
#######	-32.29	12.28	23.19	-43.20	-25.00	-18.20	V

LTE Band 7 / 10MHz / QPSK / RB Size 1 Offset 0/ The Worst Test Results for Lowest							
Frequency(MHz)	S G.Lev (dBm)	Ant(dBi)	Loss	PMea (dBm)	Limit （dBm）	Margin (dBm)	Polarity
5010.24	-34.14	12.66	15.86	**-37.34**	-25.00	-12.34	H
7515.74	-34.99	11.46	19.28	-42.81	-25.00	-17.81	H
#######	-33.08	12.79	23.19	-43.48	-25.00	-18.48	H
5010.24	-35.13	12.66	15.86	-38.33	-25.00	-13.33	V
7515.74	-34.29	11.46	19.28	-42.11	-25.00	-17.11	V
#######	-32.67	12.79	23.19	-43.07	-25.00	-18.07	V
LTE Band 7 / 10MHz / QPSK / RB Size 1 Offset 0/ The Worst Test Results for Middle							
Frequency(MHz)	S G.Lev (dBm)	Ant(dBi)	Loss	PMea (dBm)	Limit （dBm）	Margin (dBm)	Polarity
5070.06	-33.63	12.72	15.86	**-36.77**	-25.00	-11.77	H
7605.07	-35.37	11.46	19.28	-43.19	-25.00	-18.19	H
#######	-32.68	12.09	23.19	-43.78	-25.00	-18.78	H
5070.06	-35.74	12.72	15.86	-38.88	-25.00	-13.88	V
7605.07	-35.17	11.46	19.28	-42.99	-25.00	-17.99	V
#######	-33.05	12.09	23.19	-44.15	-25.00	-19.15	V
LTE Band 7 / 10MHz / QPSK / RB Size 1 Offset 0/ The Worst Test Results for Highest							
Frequency(MHz)	S G.Lev (dBm)	Ant(dBi)	Loss	PMea (dBm)	Limit （dBm）	Margin (dBm)	Polarity
5129.11	-33.64	12.76	15.86	**-36.74**	-25.00	-11.74	H
7693.82	-35.45	11.45	19.28	-43.28	-25.00	-18.28	H
#######	-33.28	12.28	23.19	-44.19	-25.00	-19.19	H
5129.11	-35.01	12.76	15.86	-38.11	-25.00	-13.11	V
7693.82	-34.93	11.45	19.28	-42.76	-25.00	-17.76	V
#######	-32.40	12.28	23.19	-43.31	-25.00	-18.31	V

LTE Band 7 / 15MHz / QPSK / RB Size 1 Offset 0/ The Worst Test Results for Lowest							
Frequency(MHz)	S G.Lev (dBm)	Ant(dBi)	Loss	PMea (dBm)	Limit （dBm）	Margin (dBm)	Polarity
5015.71	-34.36	12.66	15.86	**-37.56**	-25.00	-12.56	H
7524.13	-35.24	11.46	19.28	-43.06	-25.00	-18.06	H
#######	-33.26	12.79	23.19	-43.66	-25.00	-18.66	H
5015.71	-35.00	12.66	15.86	-38.20	-25.00	-13.20	V
7524.13	-34.32	11.46	19.28	-42.14	-25.00	-17.14	V
#######	-32.02	12.79	23.19	-42.42	-25.00	-17.42	V

LTE Band 7 / 15MHz / QPSK / RB Size 1 Offset 0/ The Worst Test Results for Middle							
Frequency(MHz)	S G.Lev (dBm)	Ant(dBi)	Loss	PMea (dBm)	Limit （dBm）	Margin (dBm)	Polarity
5070.03	-33.52	12.72	15.86	**-36.66**	-25.00	-11.66	H
7605.12	-35.27	11.46	19.28	-43.09	-25.00	-18.09	H
#######	-32.85	12.09	23.19	-43.95	-25.00	-18.95	H
5070.03	-35.49	12.72	15.86	-38.63	-25.00	-13.63	V
7605.12	-35.09	11.46	19.28	-42.91	-25.00	-17.91	V
#######	-32.76	12.09	23.19	-43.86	-25.00	-18.86	V

LTE Band 7 / 15MHz / QPSK / RB Size 1 Offset 0/ The Worst Test Results for Highest							
Frequency(MHz)	S G.Lev (dBm)	Ant(dBi)	Loss	PMea (dBm)	Limit （dBm）	Margin (dBm)	Polarity
5123.24	-34.16	12.76	15.86	**-37.26**	-25.00	-12.26	H
7523.74	-34.91	11.45	19.28	-42.74	-25.00	-17.74	H
#######	-33.24	12.28	23.19	-44.15	-25.00	-19.15	H
5123.24	-34.99	12.76	15.86	-38.09	-25.00	-13.09	V
7523.74	-34.23	11.45	19.28	-42.06	-25.00	-17.06	V
#######	-32.51	12.28	23.19	-43.42	-25.00	-18.42	V

LTE Band 7 / 20MHz / QPSK / RB Size 1 Offset 0/ The Worst Test Results for Lowest							
Frequency(MHz)	S G.Lev (dBm)	Ant(dBi)	Loss	PMea (dBm)	Limit （dBm）	Margin (dBm)	Polarity
5020.84	-33.85	12.66	15.86	**-37.05**	-25.00	-12.05	H
7531.25	-34.89	11.46	19.28	-42.71	-25.00	-17.71	H
#######	-32.85	12.79	23.19	-43.25	-25.00	-18.25	H
5020.84	-35.96	12.66	15.86	-39.16	-25.00	-14.16	V
7531.25	-34.04	11.46	19.28	-41.86	-25.00	-16.86	V
#######	-32.93	12.79	23.19	-43.33	-25.00	-18.33	V
LTE Band 7 / 20MHz / QPSK / RB Size 1 Offset 0/ The Worst Test Results for Middle							
Frequency(MHz)	S G.Lev (dBm)	Ant(dBi)	Loss	PMea (dBm)	Limit （dBm）	Margin (dBm)	Polarity
5069.67	-34.19	12.72	15.86	**-37.33**	-25.00	-12.33	H
7604.88	-34.59	11.46	19.28	-42.41	-25.00	-17.41	H
#######	-32.45	12.09	23.19	-43.55	-25.00	-18.55	H
5069.67	-34.62	12.72	15.86	-37.76	-25.00	-12.76	V
7604.88	-34.40	11.46	19.28	-42.22	-25.00	-17.22	V
#######	-31.91	12.09	23.19	-43.01	-25.00	-18.01	V
LTE Band 7 / 20MHz / QPSK / RB Size 1 Offset 0/ The Worst Test Results for Highest							
Frequency(MHz)	S G.Lev (dBm)	Ant(dBi)	Loss	PMea (dBm)	Limit （dBm）	Margin (dBm)	Polarity
5119.06	-33.98	12.76	15.86	**-37.08**	-25.00	-12.08	H
7678.38	-34.31	11.45	19.28	-42.14	-25.00	-17.14	H
#######	-32.37	12.28	23.19	-43.28	-25.00	-18.28	H
5119.06	-34.76	12.76	15.86	-37.86	-25.00	-12.86	V
7678.38	-34.28	11.45	19.28	-42.11	-25.00	-17.11	V
#######	-31.92	12.28	23.19	-42.83	-25.00	-17.83	V

Note: 1. Margin (dB) = Emission Level(dBm) -Limit(dBm)

Emission Level(dBm)= Measurement Reading(dBm)+Factor(dB)

Factor(dB) = ANT Gain -Cable Loss + Power Splitter

2. The test refers to the value of Factor, please refer to the results listed in the test method in this section of the report.
3. The radiated spurious emission has been tested with maximum bandwidth QPSK modulation, resource block size 1 and resource block offset 0.
4. Below 30MHz, no spurious emission was found, and only the worst mode data above 30MHz is recorded in the report.

5.7 Frequency Stability / Temperature Variation

The frequency stability of the transmitter is measured by:
a.) Temperature: The temperature is varied from -10°C to +50°C in 10°C increments using an environmental chamber.
b.) Primary Supply Voltage: The primary supply voltage is varied from 85% to 115% of the nominal value for non hand-carried battery and AC powered equipment. For hand-carried, battery-powered equipment, primary supply voltage is reduced to the battery operating end point which shall be specified by the manufacturer. Specification – The frequency stability shall be sufficient to ensure that the fundamental emission stays within the authorized frequency block. The frequency stability of the transmitter shall be maintained within ±0.00025% (±2.5 ppm) of the center frequency.
Time Period and Procedure:
1. The carrier frequency of the transmitter is measured at room temperature (20°C to provide a reference).
2. The equipment is turned on in a “standby” condition for fifteen minutes before applying power to the transmitter. Measurement of the carrier frequency of the transmitter is made within one minute after applying power to the transmitter.
3. Frequency measurements are made at 10°C intervals ranging from -10°C to +50°C. A period of at least one half-hour is provided to allow stabilization of the equipment at each temperature level.

Test Procedures Used
Frequency stability testing is performed in accordance with the guidelines of FCC KDB 971168 D01 V03r01; ANSI/ C63.10

Note: Reference test setup 2.

Test Result

PASS
Please refer to AITSZ-240626006FW7_Appendix LTE.

（END OF REPORT）