user manual

Product Model: GF-7

Product Model: GF-7

Ultrasonic Blue Lightwave Toothbrush (Household Use)

English.....7

Thank you for purchasing GF-7 Ultrasonic Blue Lightwave Toothbrush

For your best interests, please carefully read this instruction manual before use, and keep it for future references.

Table of Contents

Safety Precautions..... 8
Parts..... 9
Charging the Device..... 10
Instruction Manual..... 12
Reminders..... 13
Rinse..... 13
Replacement..... 14
Storage..... 14
Disposal..... 14
Trademark..... 15

Safety Precautions

For your safety concern, and to prevent injury, electric shock, fire, and property damage, please follow our safety guidelines.

1. Please keep the wireless charger away from water in safe distance.
2. When the wireless charger is in contact with water, do not touch the wet side, and unplug the wireless charger immediately.
3. Please do not use the charger when the cables and charger are damaged.
4. Please stop using the toothbrush when the device is damaged in any forms (brush head, handle, or charger).
5. Please keep the cables and charger away from a heated surface.
6. This product should not be obtained by children, please make sure it is out of reach or keep in sight when being used by a child.
7. Please refer to your dentist or doctor advice before using this product if you have received dental or oral surgeries 2 months prior to using this product.
8. Refer to a dentist when you have bleeding or continue to bleed after a week of using this product.
9. If any discomfort occurs, please stop using this product and see a medical specialist for further assistant.

Parts

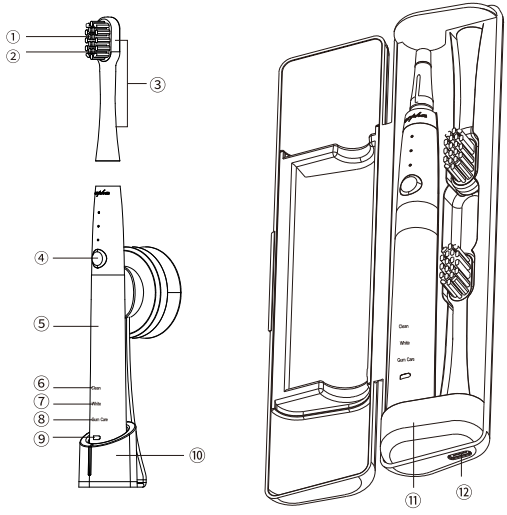

①Bristle ②Blue lightwave LED ③Brush head

④Power switch (On/ Mode / Off) ⑤Handle ⑥Cleanness indicator

⑦Whiteness indicator ⑧Gum health indicator

⑨Battery life indicat (flash when charging, constant light when fully charged)

⑩Wireless wall mount charger base ⑪Wireless charging base ⑫Wireless charging interface

Charging the Device

About Charging

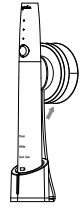

1. Please place the wall mount charger on a flat surface
2. Plug the USB cable to the charger base
3. Display the power button side to the front and plug the handle straight to the charger base.
(The device should be plugged in the concaved position)
4. Plugin the charging cable to a power outlet
The device should be fully charged in 3-4 hours.
Charging time might be varied depending on the current battery life. The battery life indication would turn into constant light when fully charged.
5. Remove the cable from the power outlet when charged and unplug the charger to ensure safety and energy reduction.

Display of Charging

(• Constant Light/ ✳ Flash)

Charging (low battery life)	Charging in progress (Flashing)	Fully charged (constant light)
✳ ○ ○	• ✳ ○	• • •

WARNING:

1. Charging time might vary when first enabled, or when not being used for more than 6 months. The battery life indicator ( ) might not display for a few minutes and would show if continue charging.

2. The recommended charging ambient temperature is between 5 to 35 degree Celsius or 41 to 95 degree Fahrenheit. Any extreme temperature lower or exceeding this range would result in dysfunction or incapability of charging.

Instruction Manual

Please keep the device away from hair and hand cream treatments, to avoid surface damage.

1. Make sure the device has enough battery life and plug the brush head to the handle.

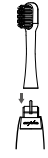

• Ensure the plugging direction is correct

(the brush head side facing front)

• There should be a tiny gap between the brush head

and the handle (0.5mm), it is a necessary gap, not dysfunction.

2. Soak the brush head into warm water

(40-degree Celsius or 104-degree Fahrenheit) for more than 30 seconds

3. Apply toothpaste to the brush head and turn on the power after placing the brush head in your mouth to avoid splashing.

4. Vibration mode selection:

• Vibration mode would change at each click, the corresponding indicator on top of the power button would display the current mode.

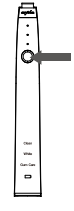

- 1st click- cleaning mode
  2nd click- whitening mode
  3rd click- gum care mode
  4th click- power off mode

5. Please turn off the toothbrush when finish brushing.

Reminders

1. Mode reminders

If the vibration strength is not strong enough during cleaning mode, please switch to the whitening mode, and so on. The vibration strength would increase gradually through switching modes.

2. Gently place the brush head to your tooth surface while using the device, no brushing gestures needed during the process to avoid over-brushing.

3. Ultrasonic Blue Lightwave Toothbrush is an electric device, it can produce up to 15,000 times of vibration per minute.

Minor discomfort might occur after using this product, even for healthy gums. The high-frequency vibration might create stimulation to your gums, along with bleeding symptoms, which would normally resolve in one to two weeks. Please stop using this product and consult a dentist when the bleeding symptoms continue to occur for over two weeks, this might suggest abnormal gum issues such as periodontal disease.

Rinse

1. After brushing your teeth, please place the brush head into a cup filled with water and turn on cleaning mode for 5 seconds. Give a light tap and make sure the brush head is cleaned.

2. Wipe the handle with a wet cloth and clean the handle surface.

3. Detach the brush head from the handle and rinse the plugging area with warm water at least once a week.

Replacement

1. Replace the brush head once a month if the following applies to your health condition:

Oral inflammation, weak body immunity, organ transplantation surgery receiver, etc. (Only apply to our GF-7 model)

2. The brush head would contain more bacteria over time, and according to professional dental advice, the brush head should be replaced every 2-3 months. (Only apply to our GF-7 model)

3. Brush head O-ring seals are recommended to be replaced every 6 months for optimum tightness

Storage

If planning to not use this product for a long time, please leave the device fully charged, and unplug the charger from the charging base. Clean the brush head, place it in the wireless charging case, place the device at a dry and cool place, and avoid direct exposure to sunlight.

Disposal

1. When disposing of this product, please open the bottom cover, remove the PCB board and battery tank, and recycle them to an appointed battery recycling location.

2. For the rest of the device, please do not place it into combustible garbage, dispose it to an appointed recycling center, help our planet to stay clean.

Trademark

All of the company or product names mentioned in this manual are the trademarks or registered trademarks of their respective holders.

FCC Statement

1. This device complies with Part 15 of the FCC Rules.

Operation is subject to the following two conditions:

(1) This device may not cause harmful interference.

(2) This device must accept any interference received,

including interference that may cause undesired operation.

2. Changes or modifications not expressly approved by the

party responsible for compliance could void the user's authority to operate the equipment.

NOTE:

This equipment has been tested and found to comply with the limits

for a Class B digital device, pursuant to Part 15 of the FCC Rules.

These limits are designed to provide reasonable protection against

harmful interference in a residential installation.

This equipment generates uses and can radiate radio frequency energy and,

if not installed and used in accordance with the instructions, may cause

harmful interference to radio communications. However, there is no guarantee

that interference will not occur in a particular installation. If this equipment

does cause harmful interference to radio or television reception,

which can be determined by turning the equipment off and on,

the user is encouraged to try to correct the interference by one or more of

the following measures:

Reorient or relocate the receiving antenna.

Increase the separation between the equipment and receiver.

Connect the equipment into an outlet on a circuit different from that to

which the receiver is connected.

Consult the dealer or an experienced radio/TV technician for help.