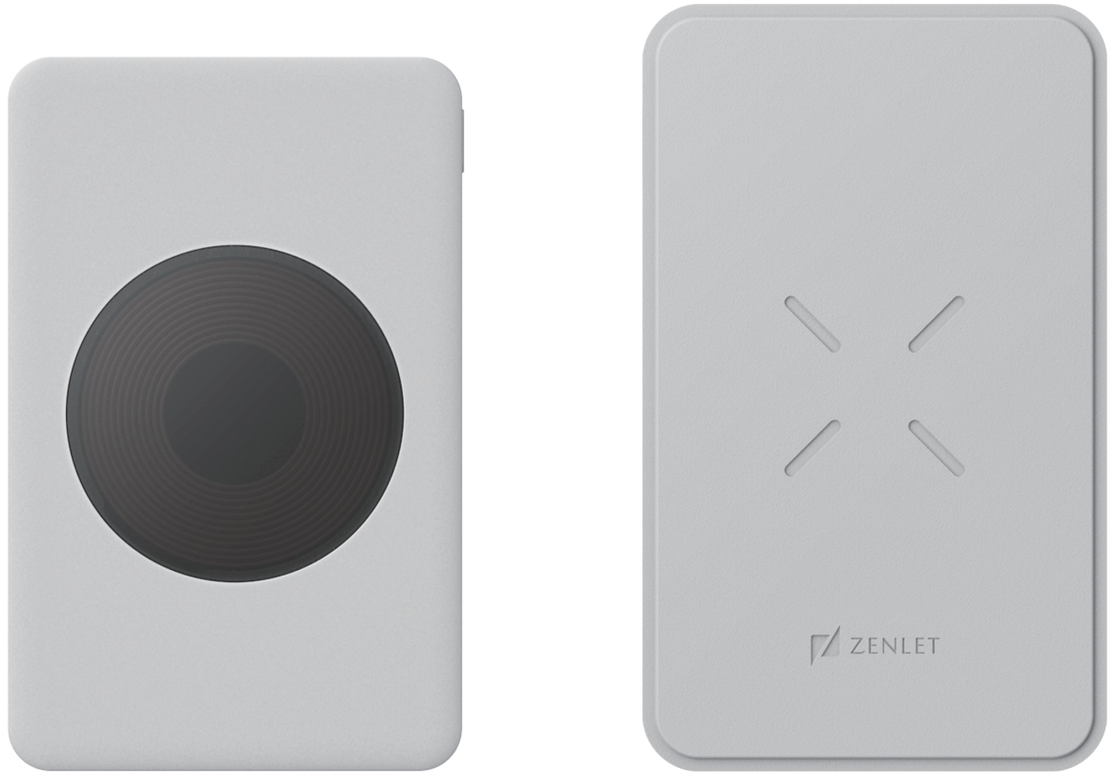

ZENLET

ZENLET Coil Series | ZENLET Coil |

① PRODUCT OVERVIEW

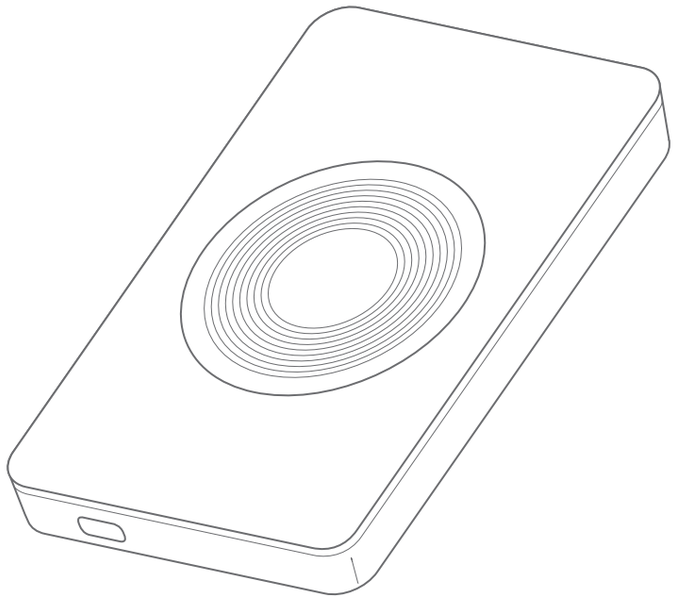

A ZENLET Coil

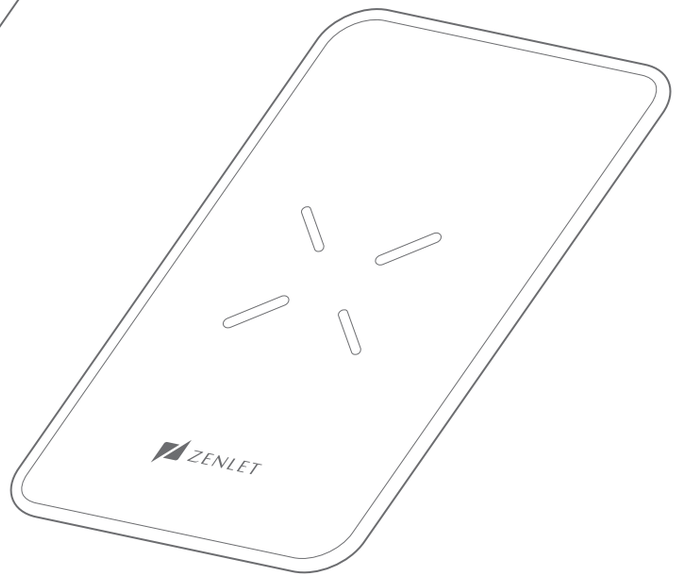

B Magnetic Gel Pad

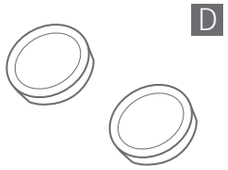

D Aroma Stones

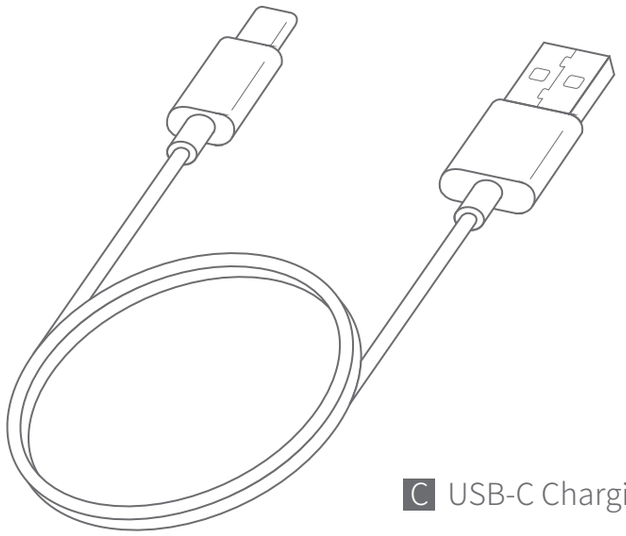

C USB-C Charging Cable

② STATUS INDICATOR

· The power indicator lights when the power button is turned on.

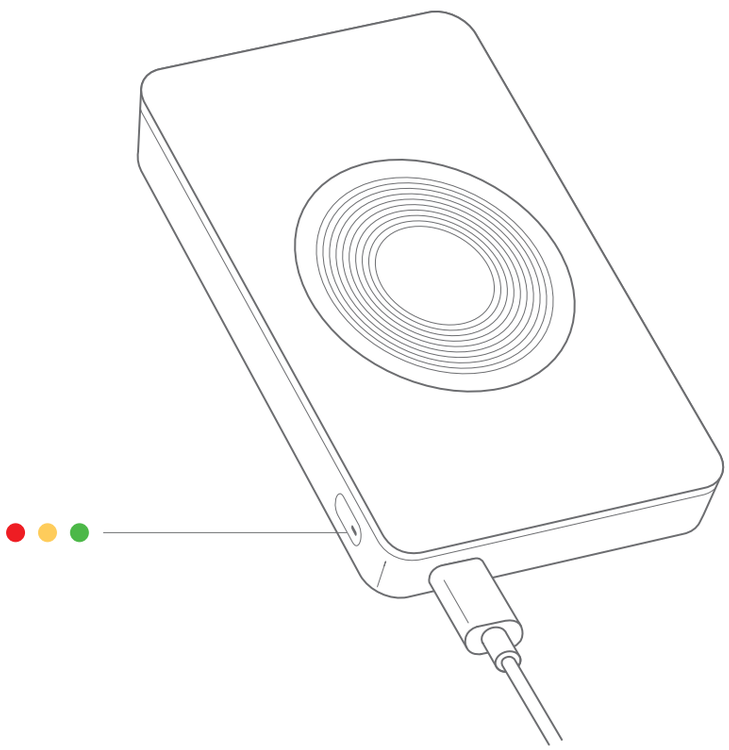

Power Capacity Indicator (**Standby / Wired Output**)

0~20%	Red LED
21~80%	Yellow LED
81~100%	Green LED

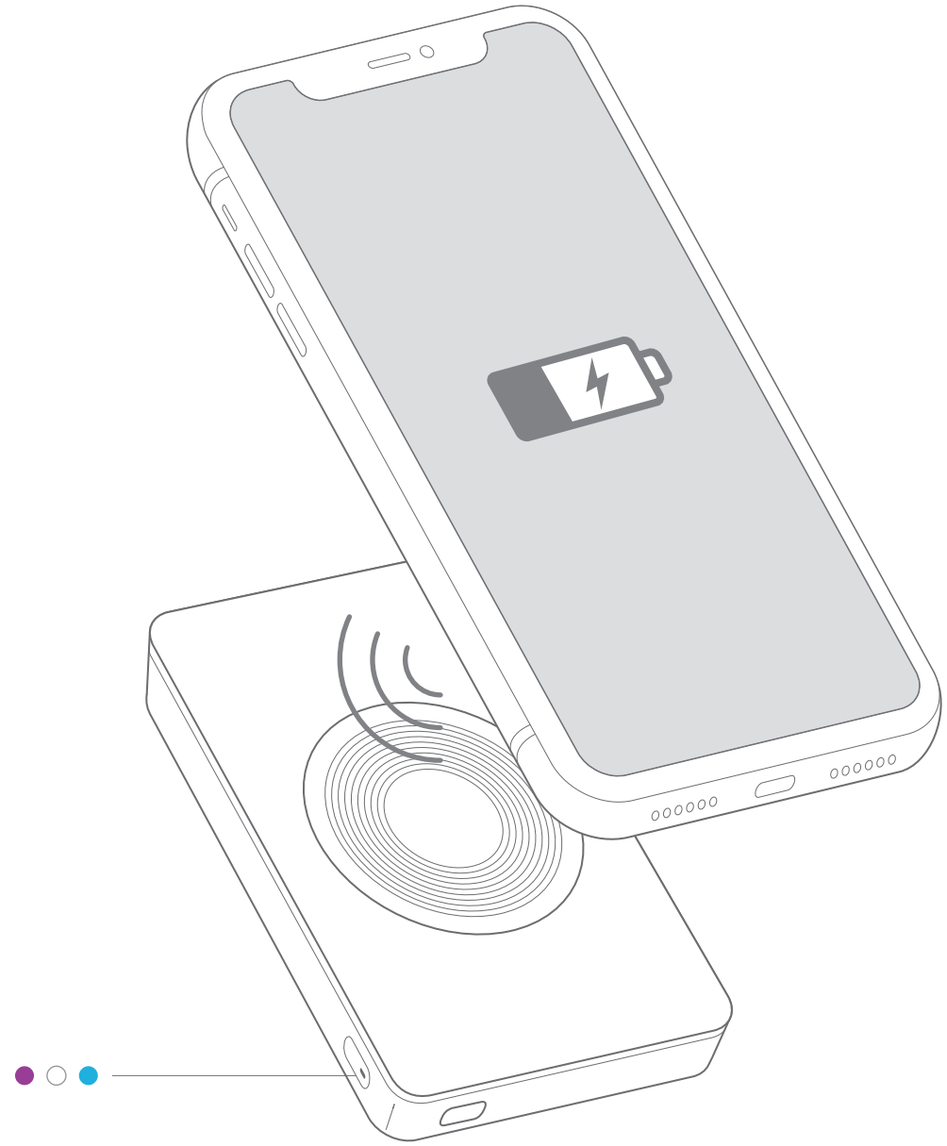

Power Capacity Indicator (**Wireless Output**)

0~20%	Purple LED
21~80%	White LED
81~100%	Green LED

③ INSTRUCTIONS

· Self Charging

Connect ZENLET Coil with the power by the included USB-C cable to start charging.

· Wireless Charging

When connected to power via USB-C cable, there is no need to push any buttons to turn on the power as ZENLET Coil will self-start and will charge your device wirelessly if placed on top of ZENLET Coil.

When ZENLET Coil is not connected to power via USB-C cable, it is necessary to turn on the power and press the power button to start charging your device wirelessly.

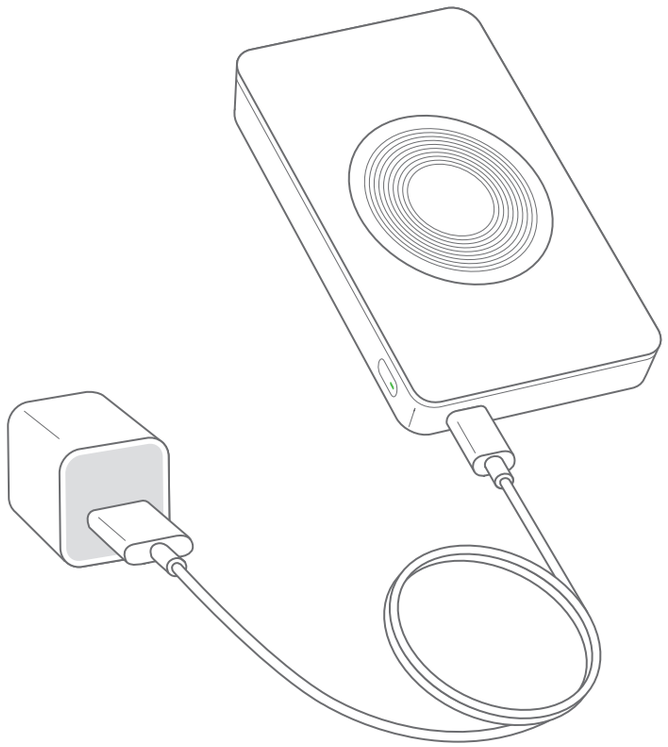

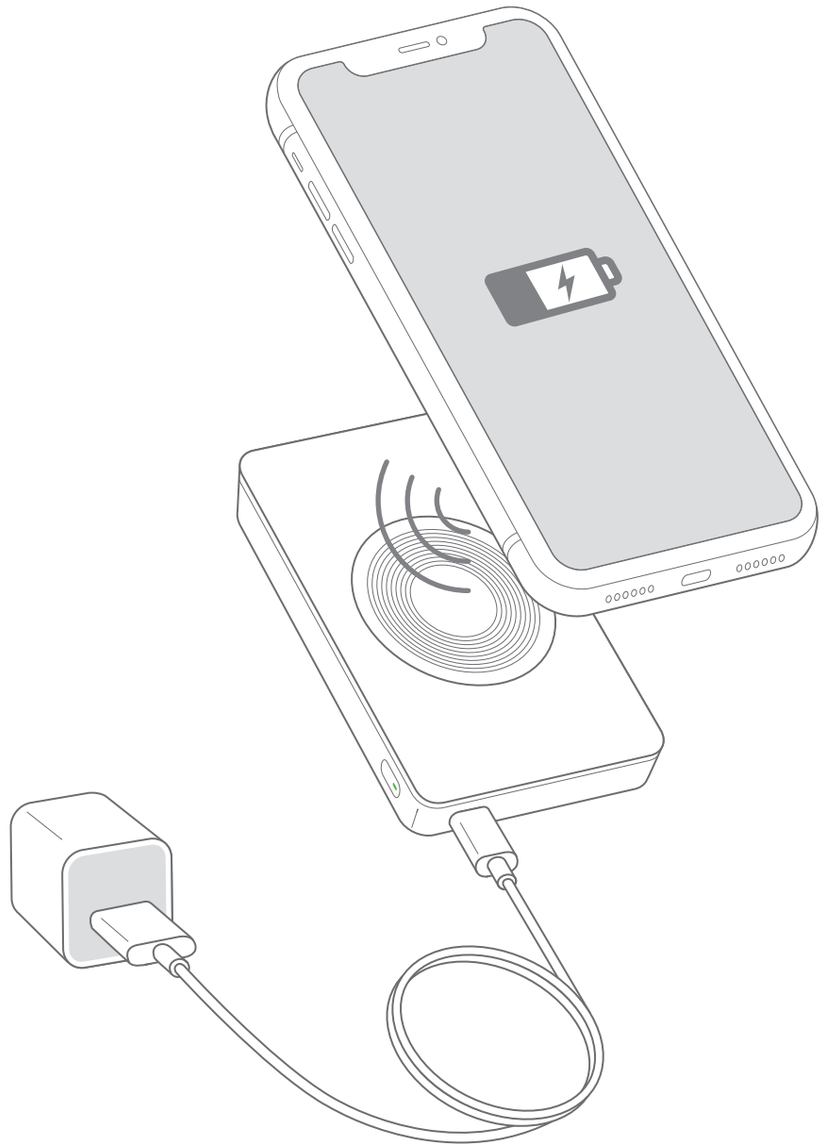

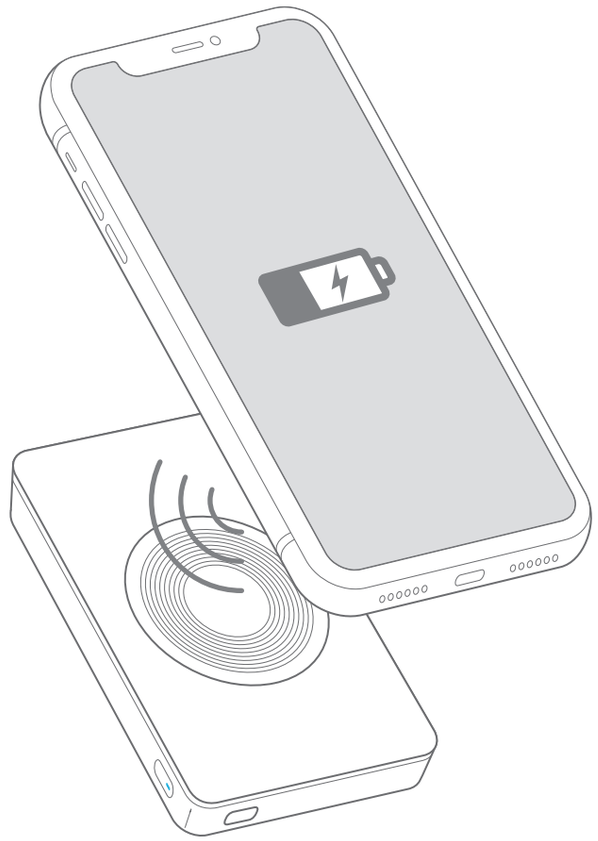

③ INSTRUCTIONS

· Wired Charging

Connect ZENLET Coil and your device with a suitable Type-C cable (Type-C to Lightning / Type-C to Type-C / Type-C to micro USB). After that, turn on the power to start the wired charging.

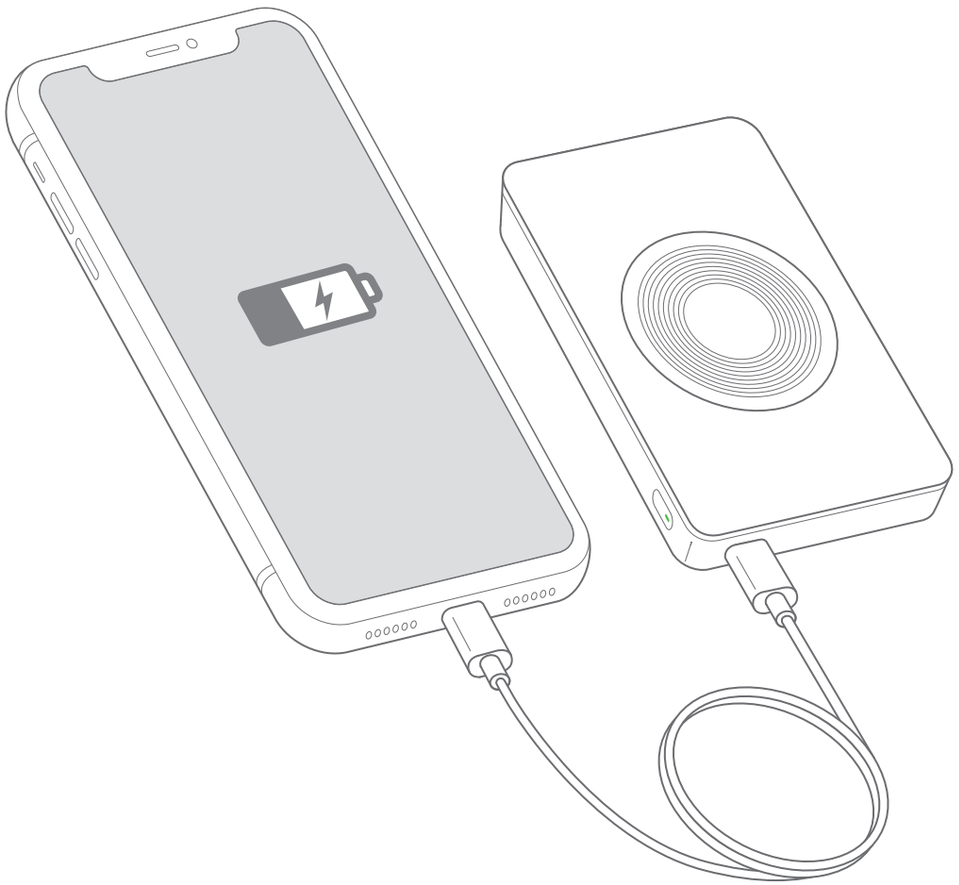

· Synchronized Charging

ZENLET Coil is capable of wired & wireless charging synchronously. Your device No.1, placed on ZENLET Coil, is charged wirelessly with the output from the battery of ZENLET Coil while your device No.2 is charged with a suitable Type-C cable (Type-C to Lightening / Type-C to Type-C / Type-C to micro USB).

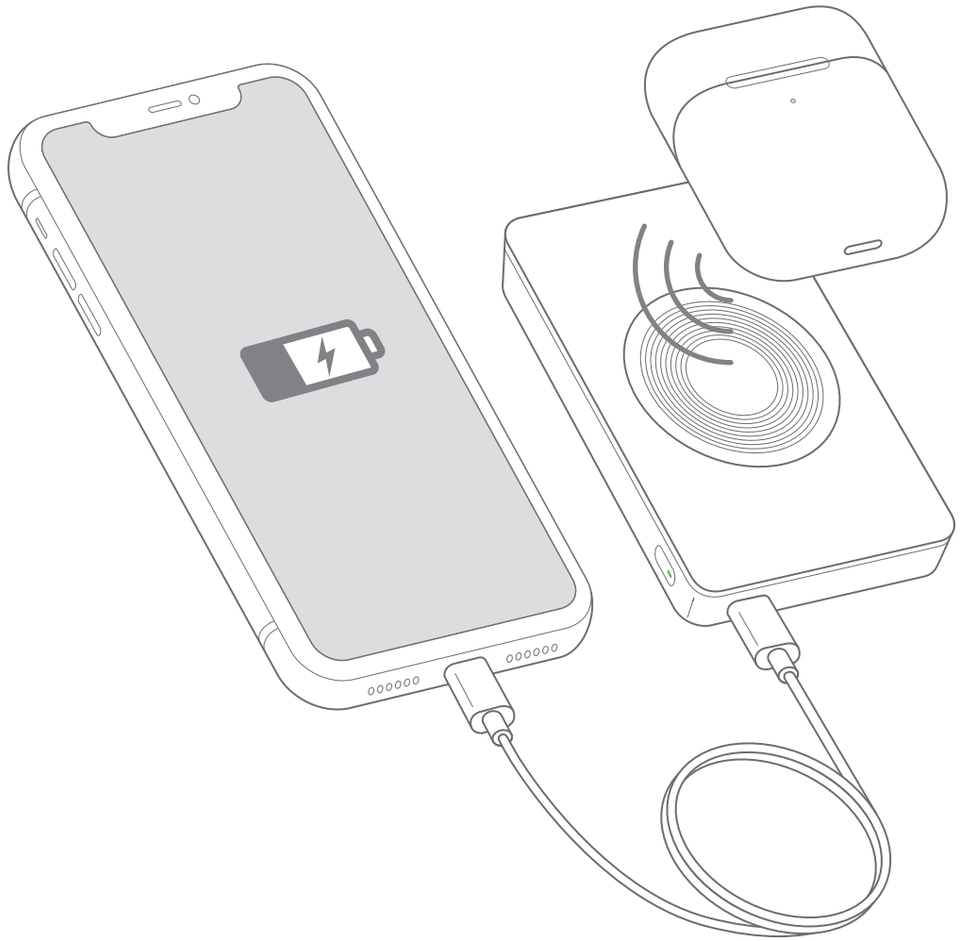

· Installation and Removal of Aroma Stones

Installation of Aroma Stones

1 Swivel clockwise to turn open the top cover of ZENLET Coil.

2 Place the Aroma Stones onto two hollows on the middle plate. The Aroma Stones will then be stabilized by the magnetic attraction.

1

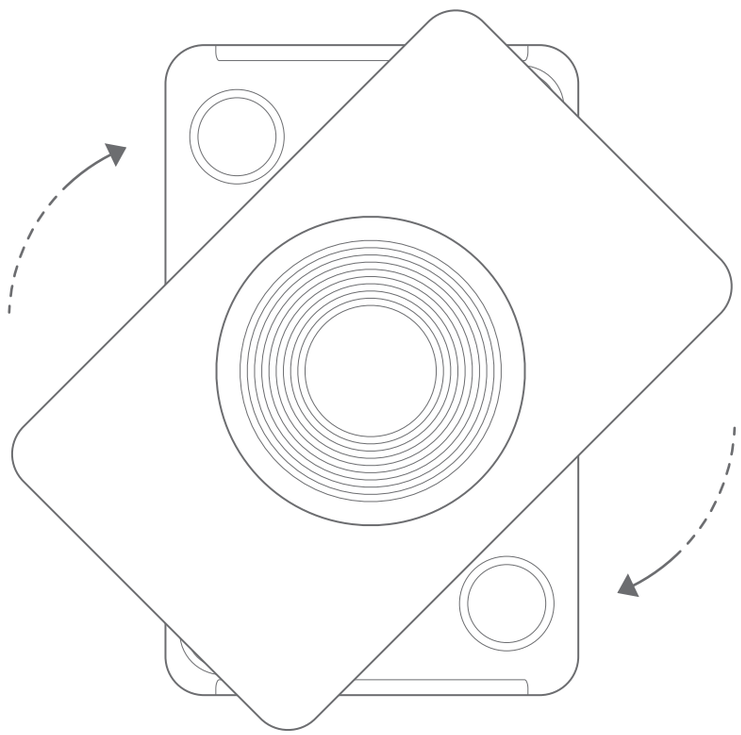

2

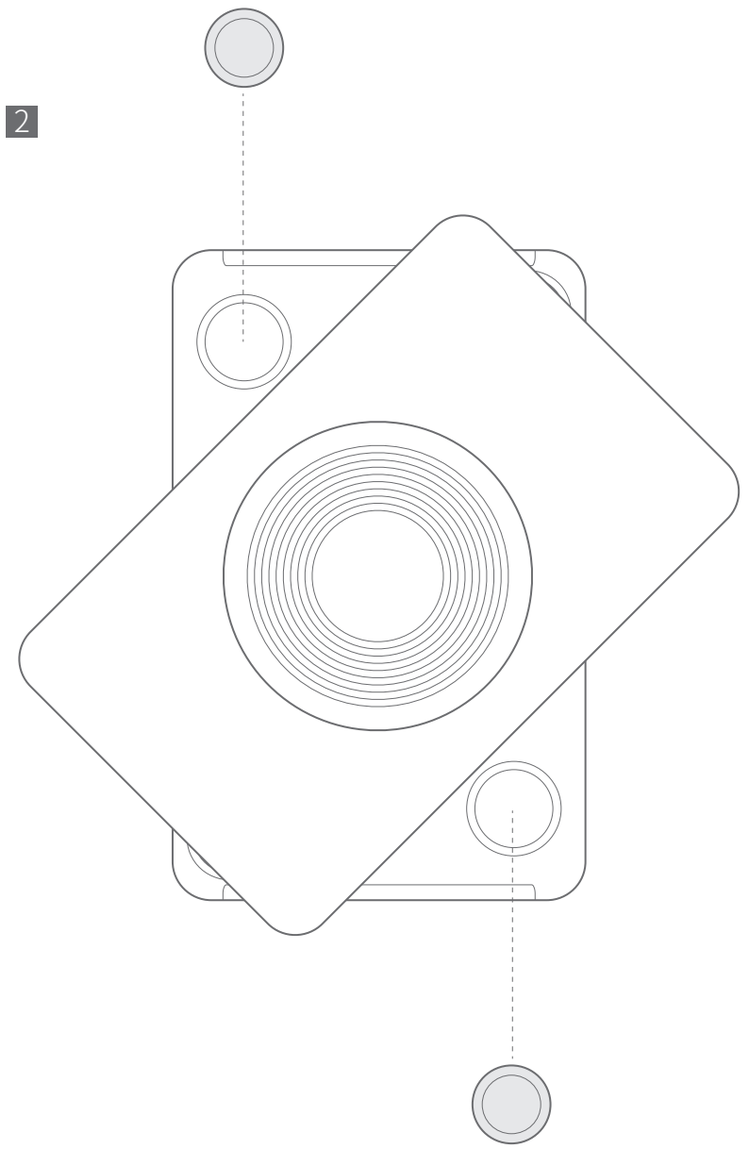

· Installation and Removal of Aoma Stones

Removal of Aroma Stones

1 Swivel clockwise to turn open the top cover of ZENLET Coil.

2 Pick up the Aroma Stone with a regular magnet or the Magnetic Bar included in the Aroma Tool Kit.

1

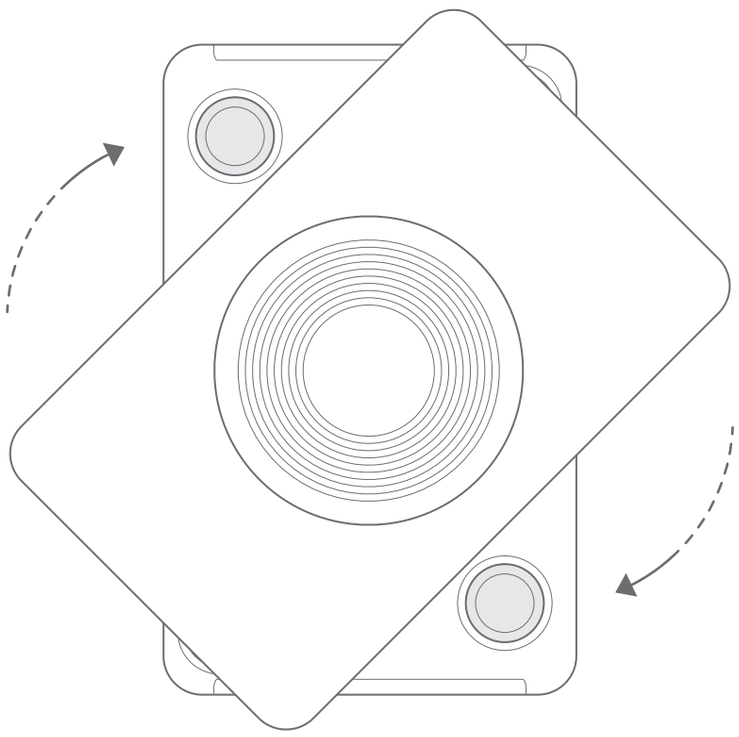

2

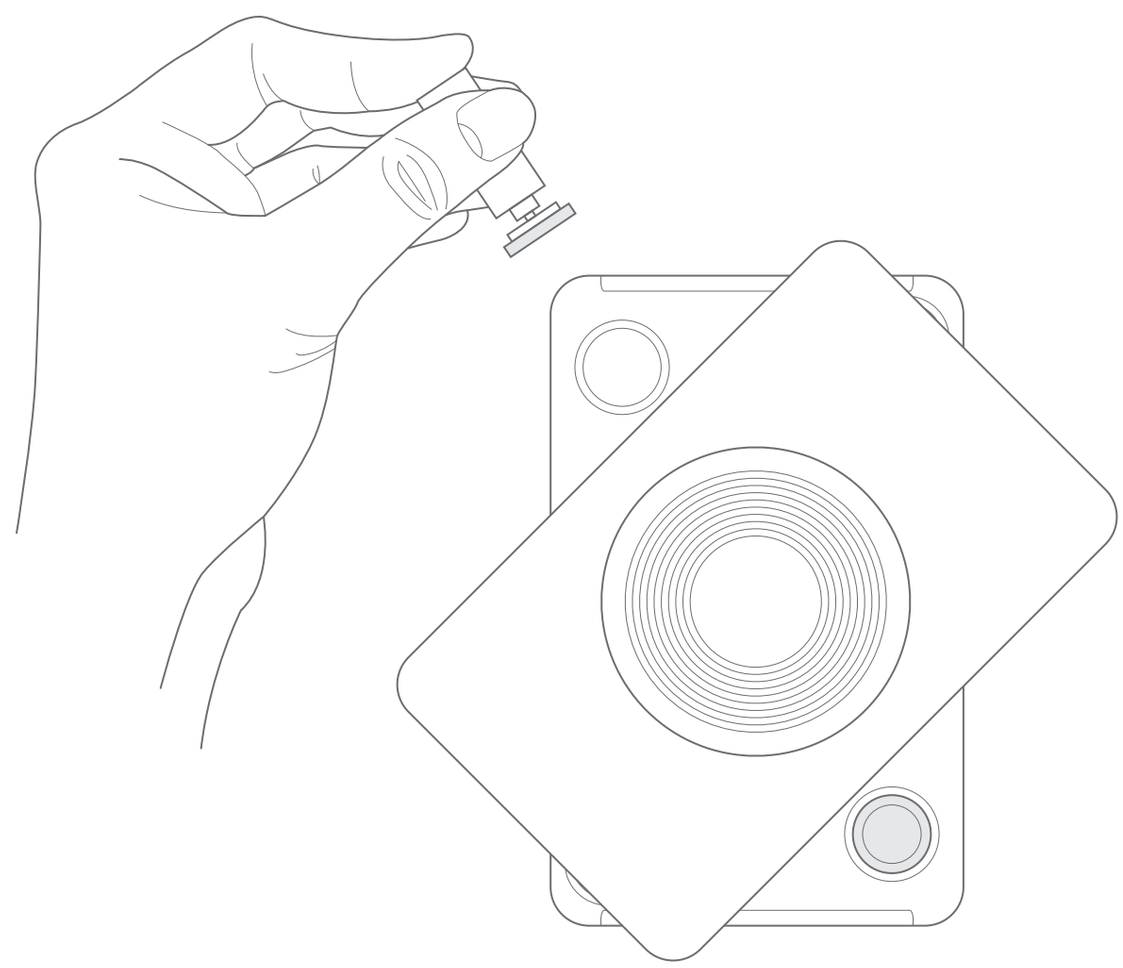

· Refill and Change of the Essential Oil

Refill of essential oil

1 Swivel clockwise to turn open the top cover of ZENLET Coil.

2 Pour 1 drop of essential oil to each of the aroma stones.
Wait until the oil is fully absorbed before you put the cover back to Coil.

1

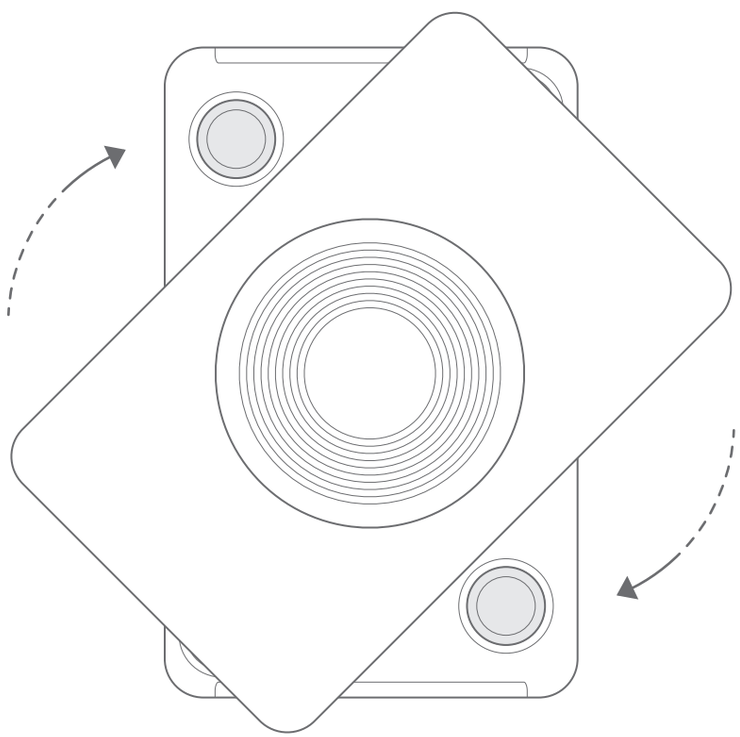

2

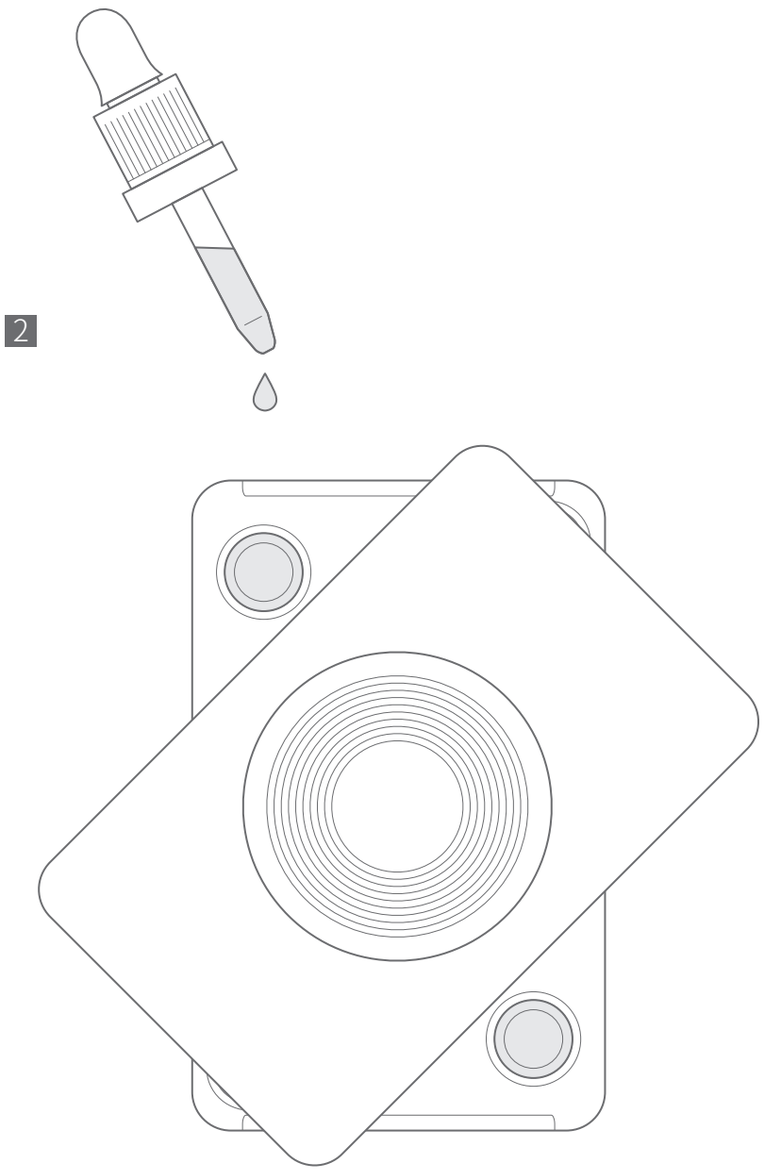

∗ If the essential oil cannot be fully absorbed by the Aroma Stone, it is probably because the essential oil on the stone is not fully evaporated.
If that is the case, wait and refill the essential oil until it is evaporated completely.

· Refill and Change of the Essential Oil

Change of essential oil on the Aroma Stone

1 Remove the Aroma Stones from two hollows of the middle plate of ZENLET Coil.

2 Soak them in the clean water for 2 to 3 hours. After the stones are being cleaned and laid dry completely, pour 1 drop of the new essential oil onto each of the Aroma Stones.

1

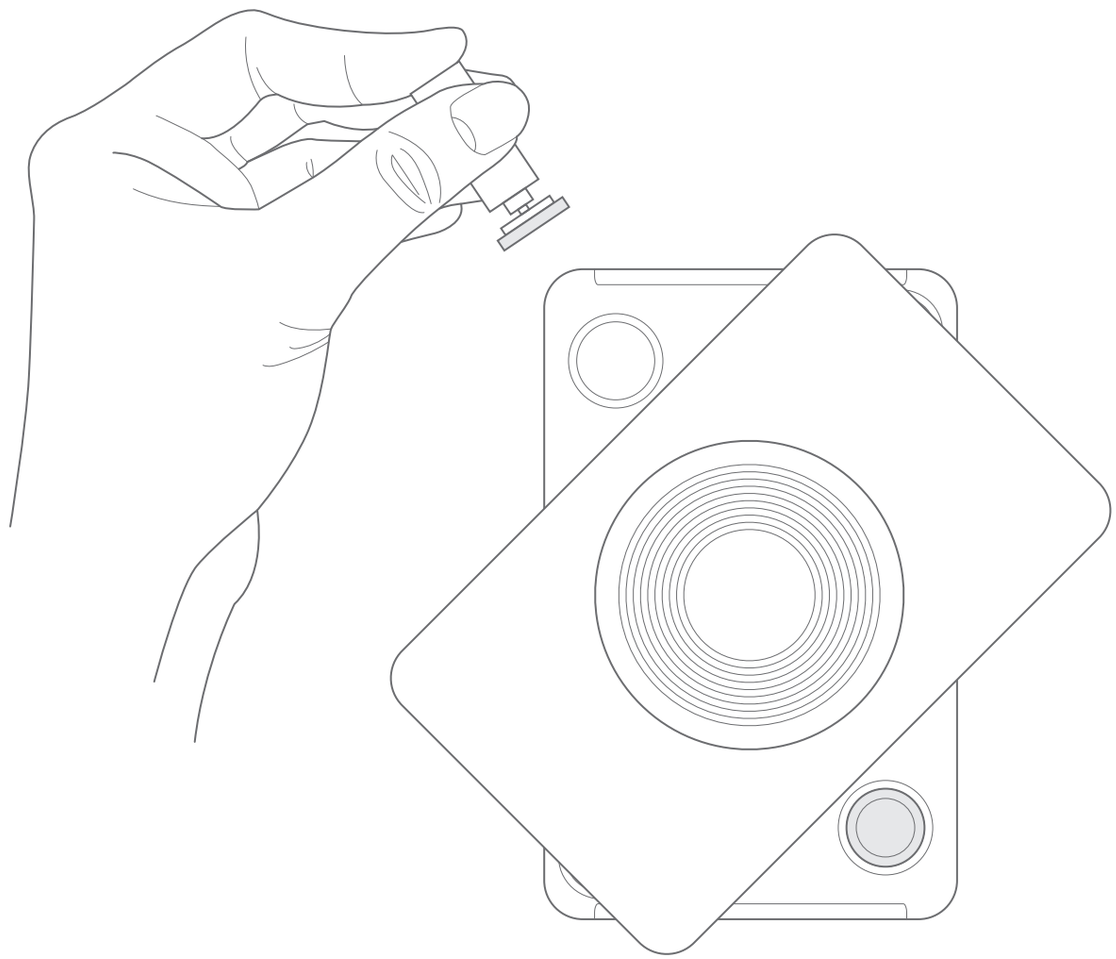

2

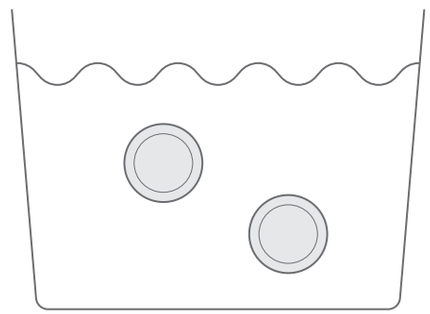

· How to clean the middle plate?

The top cover and middle plate are connected by the magnetic attraction. Simply pull out the top cover and dab the middle plate with the cotton pad and alcohol. Please don't clean the middle plate with water.

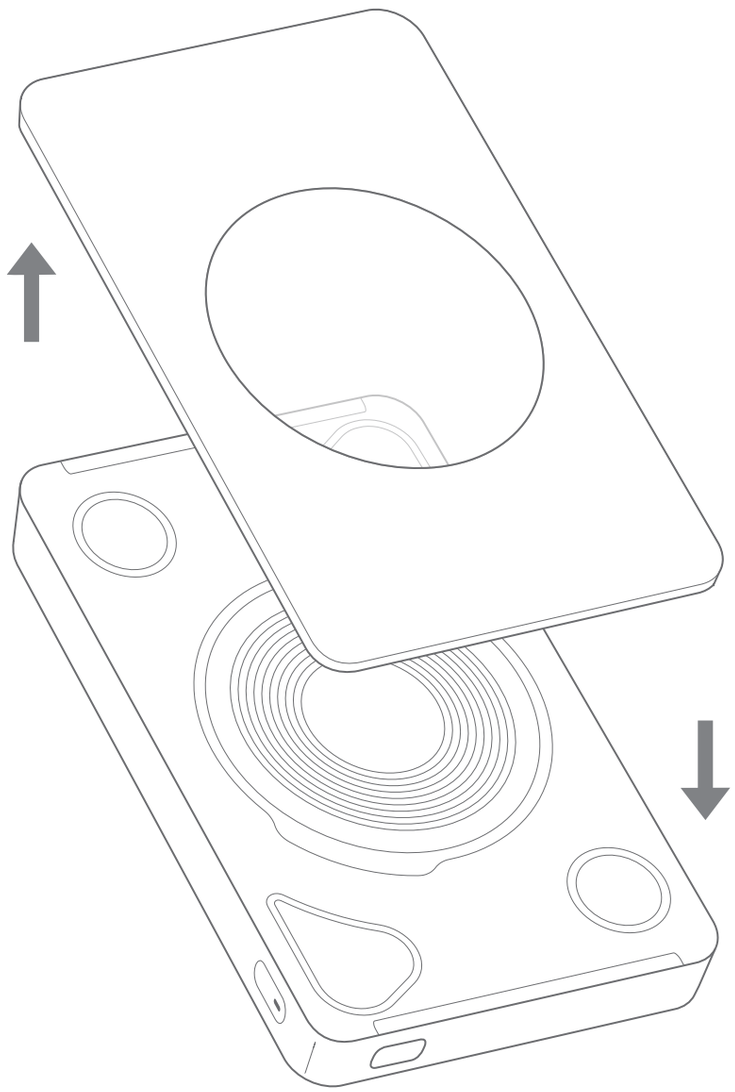

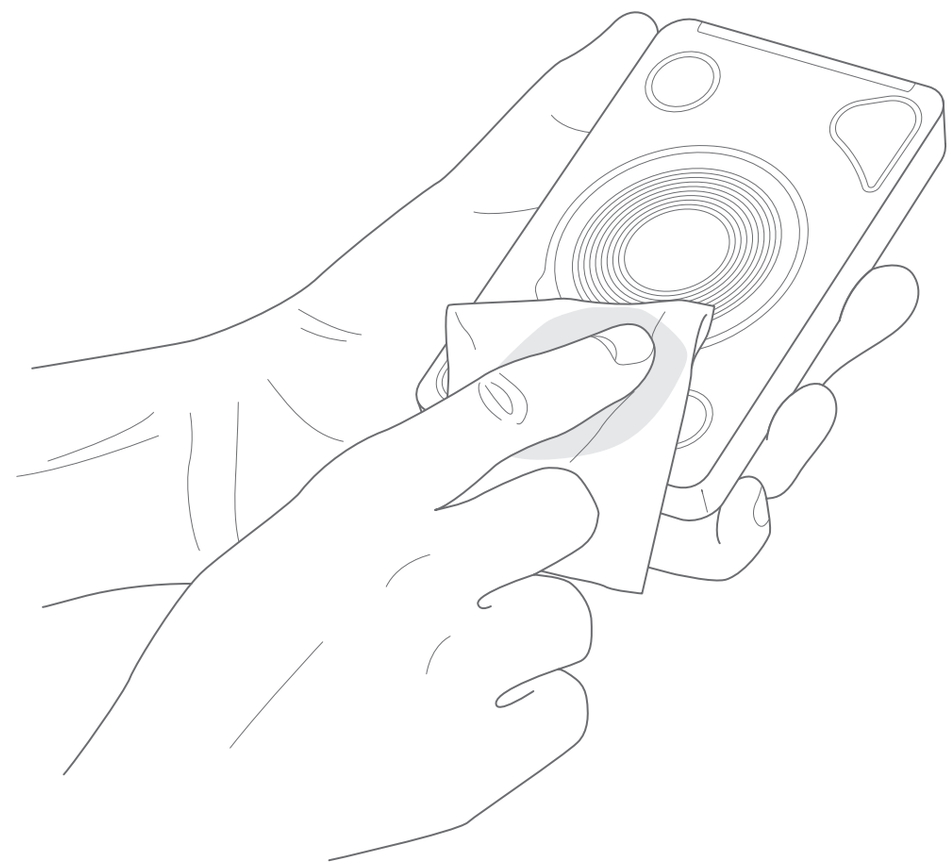

④ SPECIFICATIONS

Battery：Rechargeable lithium ion battery
Battery Capacity：4000mAh
Input：5V / 3A, 9V / 2A (USB-C. Adapter agreeable with QC or PD.)
Output：①Wireless Output
- 5W (Qi Standard 5W compatible)
- 7.5W (iPhone. Adapter agreeable with QC or PD.)
- 10W (Android. Adapter agreeable with QC or PD.)

②Wired Output (USB-C)
- Used alone：5V / 2A device
- Used when charging wirelessly：5V / 1A / device

③Sleep Mode / Power Re-starting
- ZENLET Coil will be power off and go into sleep mode after stop charging either wireless or with wire for 30 seconds.
- 2 ways to re-start the power：
  (a) Provide power to ZENLET Coil via USB cable. USB input：5V / 3A , 9V / 2A (Adapter agreeable with QC or PD.)
  (b) Turn on ZENLET Coil again.

Recommended Transmission Distance：≦ 5 mm
Working Temperature Range：20°C ~ 45°C
Protection Mechanism：Foreign object detection (FOD) and monitoring of temperature, voltage, current, power, and short circuit.
Dimensions：W63.5 × H100 × D9.5 mm
Weight：85g
Materials：Aircraft grade aluminum alloy 6061 and PC
Colors：Silver / Rose Gold / Space Grey
Origin：Designed and manufactured in Taiwan

⑤ NOTES

- Before using ZENLET Coil, make sure if your device is Qi wireless charging enabled. If your device is not Qi wireless charging enabled, please use ZENLET Coil with the USB included.
- ZENLET Coil contains one lithium battery and must be carried in carry-on baggage only, according to the international aviation safety regulation.
- Be sure to center your device on ZENLET Coil to achieve the most effective wireless charging as the performance will be affected if your device is not placed in the middle of ZENLET Coil.
- Remove all sorts of IC cards from your device before it is placed in the middle of ZENLET Coil to prevent the cards from getting demagnetized.

- Use ZENLET Coil with caution to prevent it from falling or colliding with other objects to avoid the possible damages.
- It is normal the battery inside ZENLET Coil will self-discharge when sitting unused. If necessary, re-charge the battery before you use ZENLET Coil.
- Keep ZENLET Coil away from water, fire, and constantly keep it dry to prevent the possible damage or product malfunction.
- Keep ZENLET Coil and essential oil away from enclosed vehicles alone to prevent any possible dangerous situations.
- Please don't try to modify ZENLET Coil or use it to charge the devices that don't comply with the safety regulations to avoid any possible dangerous situations.
- It is normal ZENLET Coil and your device may become hot when charging.
- Keep out of reach of children.
- If you encounter any issues while using any ZENLET Coil Series products, please email our Customer Service Team at info@zenlet.co
- Product pictures shown are for illustration purpose only.
- **Federal Communication Commission Interference Statement**

  This equipment has been tested and found to comply with the limits for a **Class B** digital device, pursuant to Part 15 of the FCC Rules. These limits are designed to provide reasonable protection against harmful interference in a residential installation. This equipment generates, uses and can radiate radio frequency energy and, if not installed and used in accordance with the instructions, may cause harmful interference to radio communications. However, there is no guarantee that interference will not occur in a particular installation. If this equipment does cause harmful interference to radio or television reception, which can be determined by turning the equipment off and on, the user is encouraged to try to correct the interference by one or more of the following measures :

  - Reorient or relocate the receiving antenna.
  - Increase the separation between the equipment and receiver.
  - Connect the equipment into an outlet on a circuit different from that to which the receiver is connected.
  - Consult the dealer or an experienced radio/TV technician for help.

FCC Caution: Any changes or modifications not expressly approved by the party responsible for compliance could void the user's authority to operate this equipment.

This device complies with Part 15 of the FCC Rules. Operation is subject to the following two conditions : (1) This device may not cause harmful interference, and (2) this device must accept any interference received, including interference that may cause undesired operation. This device and its antenna(s) must not be co-located or operating in conjunction with any other antenna or transmitter.

Radiation Exposure Statement

This equipment complies with FCC radiation exposure limits set forth for an uncontrolled environment. End user must follow the specific operating instructions for satisfying RF exposure compliance.

⑥ CONTACT US

ZENLET Coil Series Manual
Official Website：zenlet.co | On-line Shop：shop.zenlet.co
E-mail：info@zenlet.co | Tel：+886 2 8791 6946
Address：2F. , No. 45, Ln. 150, Sec.1, JiuZong Rd., NeiHu Dist., Taipei City, Taiwan