Thermal Receipt Printer T3180

User Manual

Shenzhen Zolon Technology Co., Ltd.

REVISION RECORDS

REV.	DATE	DESCRIPTION	Drawn	Checked	Approved
1.0	2022.11.12	1.First edition	Will		
1.1	2023.02.17	Add Wi-Fi/Bluetooth description	Will		

Statement

Warnings:

⚠ This must be complied with in order to avoid any damage to the human body and to the equipment.

⚠ This is showing the important information and tips for the printer operating.

Note: Due to continuous update of product, please take in kind of real machine, such as accessories, programs etc.

Important Safety Instructions

1. Safety Warning

Warnings: The print head will become very hot during printing; avoid contact with the print head after printing has finished.

⚠ **Warnings:** Do not touch the printer head and connector in case static damage the printer head.

2. Instructions

Carefully read the installation and operating instructions provided with the printer before starting up your printer.

1) Place the printer on a flat and stable surface.

2) Leave enough space around printer for operation and maintenance.

3) Do not place the printer on or near a heat source.

4) Do not use the printer near water. Never spill liquid into the printer.

5) Do not expose the printer to high temperatures, direct sunlight or dust.

6) Protect the printer from shock, impact and vibration.

7) Be certain the power source is within the voltage rating and frequency listed for the printer.

8) Switch off the printer power supply when won't use it for a long time.

9) Do not place the power cord where it can be stepped on. If the power cord becomes damaged or frayed, replace it immediately.

10) To ensure the print quality and reliability, you are suggested to use the recommended paper or the same quality paper.

11) Please switch off the power supply when connect/disconnect all the ports or it will cause damage to the printer control circuit.

12) Never carry out maintenance or repair work yourself. Always contact a qualified service technician.

13) Keep this User Manual in a place which is easily accessible at all times.

3. Other Precautions

The copyright for this user manual and various other manuals is property of our company. Any copying or conversion into electronic form and saving of this material without the express

written permission is strictly prohibited. Use of the information contained in this manual is not subject to any patent liability. This manual has been prepared with utmost care and attention to detail but may contain certain errors and/or omissions. Our company is not legally liable for any damages resulting from the use of the information in this manual. Our company and its affiliates are not legally liable (United States excluded) for any damages, loss, costs, and/or expenses that result from the breakdown, malfunction, and/or misuse of the product due to violation or neglect of the operation and maintenance information and instructions provided by our company, as well as from the unauthorized alteration, repair, and/or modification of the product by the user and/or third party. We are not legally liable for any damages and/or issues resulting from the use of options and/or parts that are not authentic or authorized products.

4.WEEE (Waste Electrical and Electric Equipment)

This mark shown on the product or its literature indicates that the corresponding item should not be discarded at the end of its working life with others household waste. To prevent possible harm to the environment or human health from uncontrolled waste disposal, please separate marked items from other types of waste and recycle them responsibly to promote the sustained reuse of material resources. Household users should contact either the retailer where they purchased this product, or their local government office for details of where and how they can conduct environmentally safe recycling of such items. Commercial users should contact their suppliers and check the terms and conditions of purchase contracts. This product should not be combined with other commercial waste for disposal.

Caution: this is a Class A product. In a domestic environment this product may cause radio interference in which the user may be required to take adequate measures.

---

1. OVERVIEW

1.1 Introductions

T3180 is a thermal receipt printer, featured by high print quality, high print speed, high stability, etc. It can be used in commercial POS system, food industry and occasions which need real-time field print receipts.

T3180 can connect with other equipment through Serial, USB, WIFI, Blutooth and Ethernet interfaces. And the printer drivers are available for the WINDOWS XP/WINDOWS 7/WINDOWS 8/WINDOWS 10/Linux operating system.

1.2 The Main Features

T3180 is a thermal receipt printer, featured by high print quality, high print speed, high stability, etc. It can be used in commercial POS system, food industry and occasions which need real-time field print receipts.

1) Low noise
2) High print speed
3) Easy paper loading
4) Support page mode printing
5) Compatible with various width paper
6) Cash drawer interface
7) Communication interfaces optional

---

2. GETTING STARTED

2.1 Packing List

After receiving your printer, please check for possible shipping damage:

1) Inspect the outside of both the box and the printer for possible damage.

2) Check whether you have received the following accessories together with the printer, if there are any items missing, please contact your local dealer.

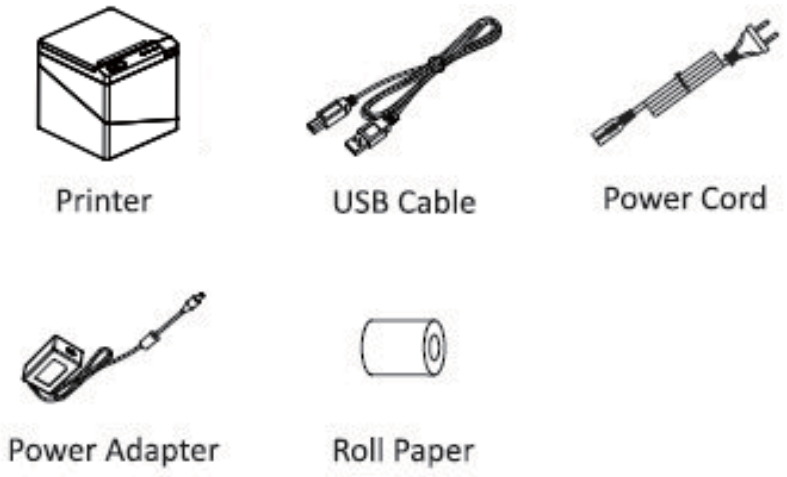

Note: The Power adapter and power cord vary by local and region. The packing materials are actually dependent on the order.

2.2 Appearance and Components

- **Front**

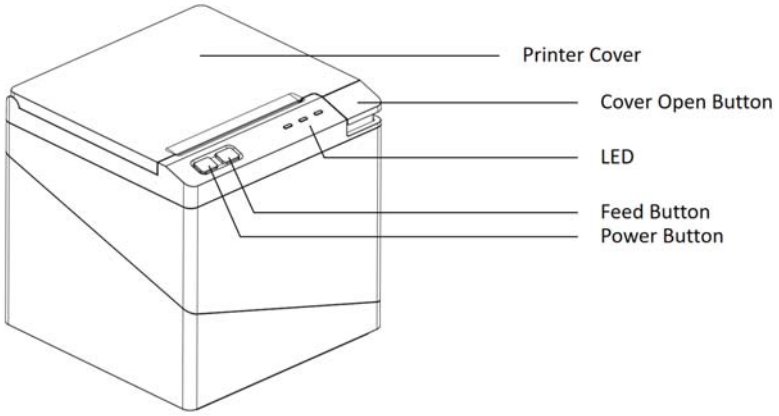

- Rear

The printer without Bluetooth interface:

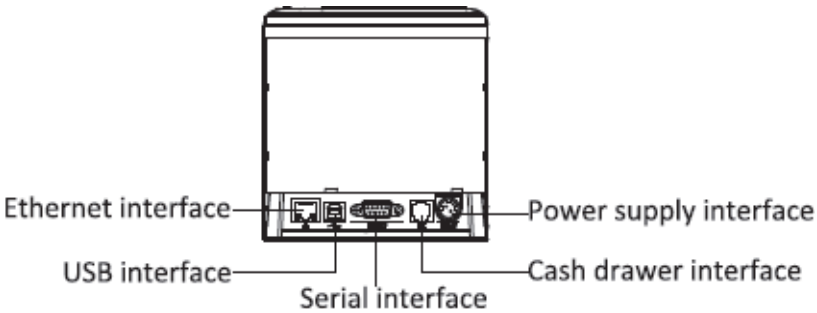

- Inside

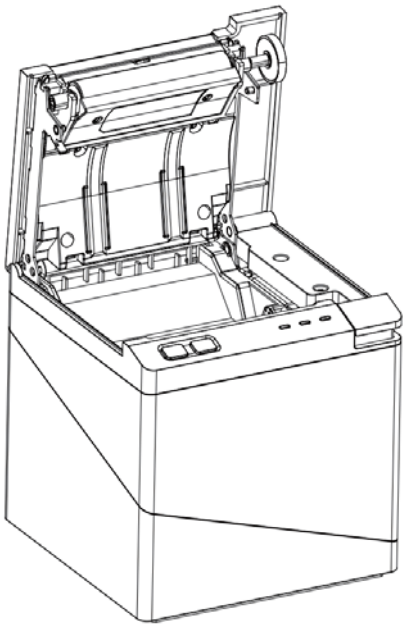

3. List SPECIFICATION

3.1 Printer Specification

Table3-1 General Specification

Item	Parameter	
Printing Parameter	Printing Method	Direct thermal line printing
	Resolution	203dpi，8dots/mm
	Printing Width	72mm
	Print Speed	260mm/s
	Interface	USB, Serial, Ethernet, Cash drawer, Bluetooth
	Print density	Adjustable from level 1 to level 4
Page Mode		Support
Memory	RAM	2Mbyte
	Flash	4Mbyte
Fonts	Chinese	GBK 24×24
	Alphanumeric	ASCⅡ9×17,12×24.
	User-defined	Support
	Code page	Optional international character sets: PC437(std.Europe), Katakana, PC850(Multilingual), PC860(Portuguese), PC863(Canadian), PC865(Nordic), PC857(Turkish), PC737(Greek), ISO08859-7(Greek), WPC1252, PC866(Cyrillic #2), PC852(Latin 2), PC858(Euro), KU42(Thai), TIS11(Thai), TIS18(Thai), PC720(Arabic), WPC775(Baltic Rim), PC855(Cyrillic), PC862(Hebrew), PC864(Arabic), ISO8859-2(Latin2), ISO8859-15(Latin9), WPC1250(Latin 2), WPC1251(Cyrillic), WPC1253(Greek), WPC1254(Turkish), WPC1255(Hebrew), WPC1256(Arabic), WPC1257(Baltic Rim), WPC1258(Vietnamese), MIK(Cyrillic), PC755(Latin 2), Iran, Iran II, Latvian, ISO-8859-1(WestEur), ISO-8859-3(Latin 3), ISO-8859-4(Baltic), ISO-8859-5(Cyrillic), ISO-8859-6(Arabic), ISO-8859-8(Hebrew), ISO-8859-9(Turkish), PC856, PC3848(ABICOMP), MONGOLIAN, VISCII

Table3-1 General Specification(Continued)

Item	Parameter	
Barcode	1D	UPC-A, UPC-E, EAN8, EAN13, CODE39, ITF, CODEBAR, CODE128
	2D	PDF417, QR code, (DataMatrix, Maxicode and Aztec) for optional
Graphics		Support varied density bitmap as and download bitmap printing Max size of each bitmap is 40K, the total size of bitmap is 256k.
Detection	Sensors	Paper out detection, Cover open detection
LED Indicator	Power LED	Green LED
	Paper LED	Blue LED
	Error LED	Red LED
Power Supply	Input	AC100V-240V
	Output	24V/2.5A

Paper	Paper type	Specified Thermal Paper
	Paper width	58_{-1}^{+0} mm/ 80_{-1}^{+0} mm
	Paper thickness	0.056 ~ 0.13mm
	Roll paper diameter	Max. OD ϕ83mm
	Paper load	Easy-loading structure of forward open cover or upward open cover
	Paper cut	Partial cut or full cut
Physical Spec.	Operating condition	0℃ ~ 40℃，20% ~ 85%RH
	Storage condition	-20℃ ~ 70℃，5% ~ 95%RH
	Dimensions	137.3(L)*132(W)*130.5(H)mm
	Weight	1.33kg
Command		ESC/POS
Software	Driver	Windows2000/XP/Vista/Win7/Win8/Win10/POSReady/Linux CUPS/OPOS/JavaPOS
	SDK	WinCE, Win Mobile, Android, iOS
Agency Approvals		FCC, CE

3.2 Printing Media Specification

3.2.1 Continuous Thermal Paper Specification

Paper Type: Specified Thermal Paper

Paper Width: 58_{-1}^{+0} mm/ 80_{-1}^{+0} mm

Paper Outer Diameter: Max. 83 mm

Paper Thickness: 0.056 ~ 0.13m

Paper Type	Manufacturer
FD210,PD150R,PD160R	OJI Paper CO.,LTD.

3.2.2 Notices

⚠ **Notes:**

- Please use the recommended thermal paper or same quality paper, otherwise it will influence the printing quality and decrease the thermal printer head life;
- Don’t stick the paper on the roll paper mandrill;
- If the thermal paper is polluted by chemical or oil, the thermal paper heat sensibility decreases, which will influence the printing quality;
- Don’t use finger nail or hard articles to touch the surface of thermal paper, otherwise it will cause color fading;
- When the environment temperature is higher than 70°C, the thermal paper color will fade, so pay attention to the influence of temperature, humidity and sunlight.

3.3 Printing and Cutting Position

3.2.3 Printing position

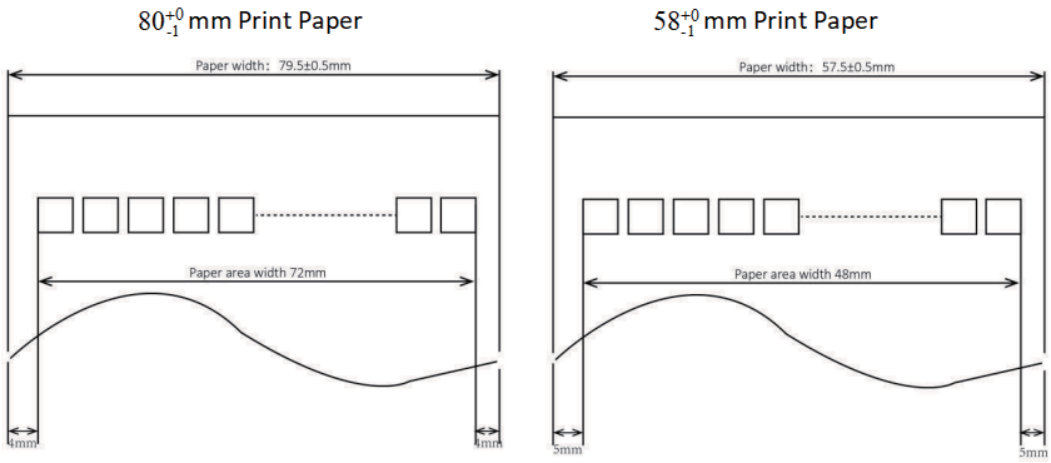

3.2.4 Cutting Position

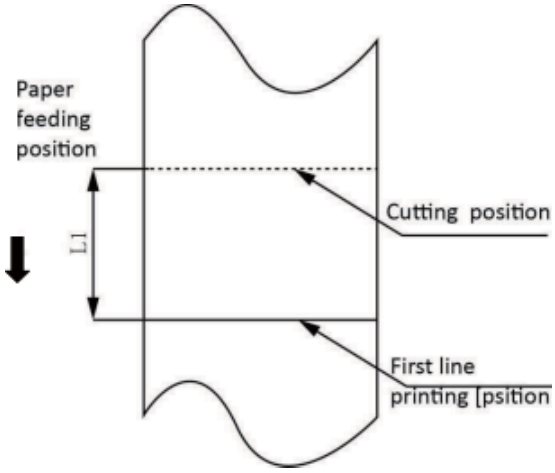

Type	Paper Cutting Position(L1)
T3180	11.6mm

---

4. INSTALLATION AND USAGE

4.1 Media Loading

4.1.1 Paper Confirmation

1) When using 80mm(width) roll paper, take down the paper guide of both sides.

2) When using 58mm(width) roll paper, insert the paper guide to each side.

Note: Roll paper should be placed in the middle.

4.2 LED Indication and Beeper

Function specification of indicated light and beeper.

Name	Status	Specification

POWER LED (Green)	ON	The printer work well
	OFF	The printer does not work
ERROR LED (Red)	Flashing	The printer in an error state
	OFF	The printer in a normal state
PAPER LED (Blue)	ON	The printer in paper end state
	OFF	The printer in a normal state

Description	POWER LED	ERROR LED	PAPER LED	Beeper
Open the cover of printer	ON	ON	ON	"Beep, Beep—, Beep"
Full of paper	ON	OFF	OFF	Silent
No paper	ON	ON	ON	"Beep Beep Beep".
Cutter jam	ON	Flash	OFF	"Beep—, Beep—"

⚠ Notes:

The printer uses a thermistor to detect the temperature of the print head. If the temperature of print head is more than 65° C, printer will send a warning. If the temperature of print head is more than 80° C, printer will stop working until the temperature is less than 60° C.

4.3 Power Connection

1) Put the cable plug of power adapter facing up at flat side, insert the rear of the printer power connector;

2) Turn the power adapter input power;

3) Pay attention about disconnecting or connect the Power adapter at right method, or likely to cause damage.

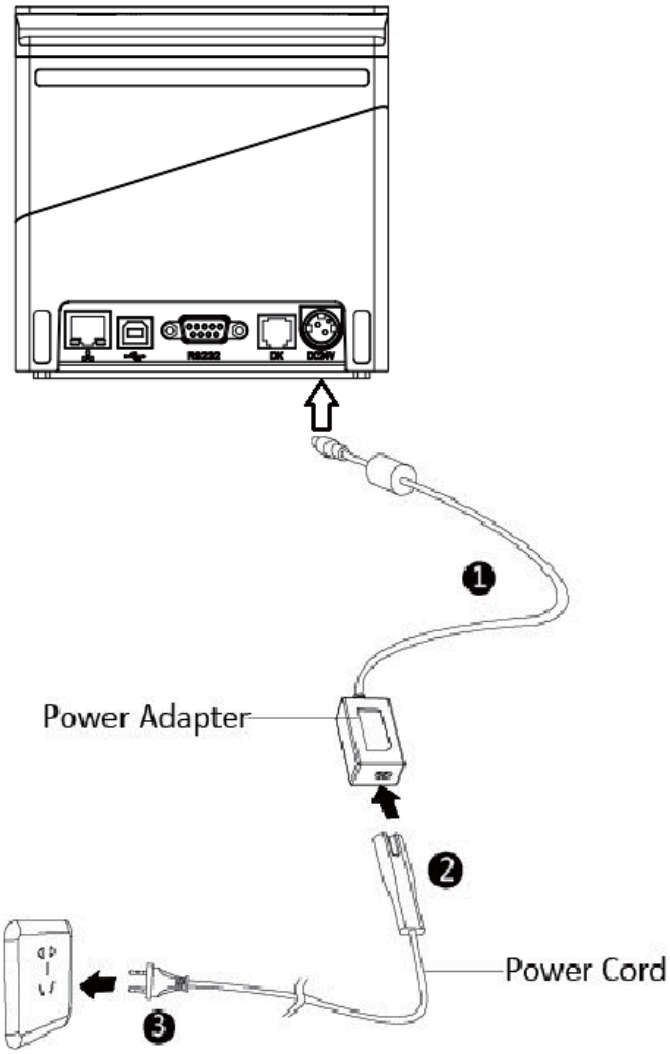

Note: The Power adapter and power cord vary by local and region.

When pull out the adapter, please pinch the shell of power adapter and pull the switch up, when the switch is fully opened then pull out the power adapter.Don't put forth your strength to pull the plug by squeeze at any of place of power adapter. Because,it is more difficult to pull it out and easy to damage the cable.

⚠ Notes:

- Please only use the power adapter recommended by supplied or equivalent products;
- When disconnecting the power adapter plug, handheld plug connector housing, to avoid the pulling on the cable in force;
- Avoid drag the power adapter cable, otherwise it will damage the cables, causing fire and shock;
- Avoid put power adapter around a heating device, otherwise the cable may melt, causing fire and shock;
- If you do not use the printer in a long time, disconnect the power supply of printer power adapter.

4.4 Interface Cable Connection

1) Make sure the printer's power switch is turned off;

2) Put the interface cable into the matched interface and fixed with screws (or spring) on the plug;

3) Connect the other end of the interface cable to the host.

4.5 Cash Drawer Connection

1) Make sure the printer's power switch is turned off;

2) Connect the cash drawer cable into the cash drawer interface on the rear side of the printer.

⚠ Warning:

Cash drawer interface can only be connected to a voltage of 24V cash drawer device (can't connect to the phone line, etc.)

4.6 Bluetooth/Wi-Fi Settings

4.6.1 Bluetooth Settings

Default name: T3180_XXXXXXXXXX

Default password: 0000 or 1234

4.6.2 Wi-Fi Settings

WIFI and Ethernet functions cannot be used at the same time,Printer is in Ethernet mode default.If you need to switch to wifi mode, you can open the printer cover, and then press and hold the power button and the paper feed button at the same time for at least 3 seconds.When the printer is in WiFi mode, it is AP mode by default with IP address "192.168.1.1" and SSID "T3180_XXXXXXXXXX" and password "12345678".

4.7 Print Test

4.7.1 Print Self-Test

The self-test checks the printer's current settings, status and whether the printer has any problem.

1) Make sure the power is connecting and paper is loading properly.

2) Make sure the printer is off and top cover closes properly.

3) Pressing the paper feed button and power button simultaneously turns the printer on. The printer is ready to receive data as soon as it completes the self-test.

4.7.2 Printing of Windows Driver Program

1) Install the Windows Driver program. (Please refer to the Windows Driver Manual)

2) Please set the “Interface” as the type you use.

3) Use the Windows Driver Program to print out the “Print Test Page”.

---

5. INTERFACES

T3180 supports cash drawer interface and many other various communicate interfaces, such as Serial interface, USB interface, Ethernet interface.

5.1 USB

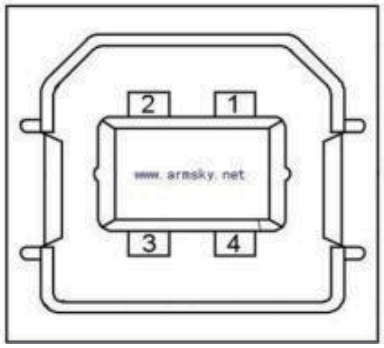

Figure 5-1

PIN No.	SIGNAL NAME
1	VBUS
2	D-
3	D+
4	GND

5.2 Serial Interface

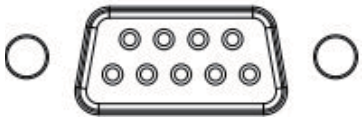

Figure 5-2

PIN No.	SIGNAL NAME
1	-
2	TXD
3	RXD

4	-
5	GND
6	RTS
7	CTS
8	RTS
9	-

5.3 Ethernet Interface

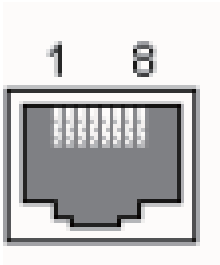

Figure 5-3

PIN No.	SIGNAL NAME
1	TX+
2	TX-
3	RX+
4	-
5	-
6	RX-
7	-
8	-

NOTE: Ethernet interface can only be connected to a has been isolated SELV such interface of end device.

5.4 Cash Drawer Interface

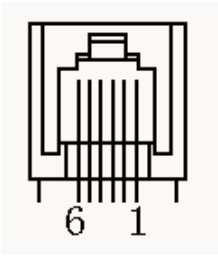

Figure 5-4

PIN No.	SIGNAL NAME
1	FG
2	Drawer 1
3	DRSW
4	VDR
5	Drawer 2

6	GND

Electrical characteristics

- Driving voltage：DC 24 V
- Driving current：Maximum 0.8 A (In 510 ms)
- Drawer check signal：“L” = 0 ~ 0.5 V “H” = 3 ~ 5 V

5.5 Power Supply Interface

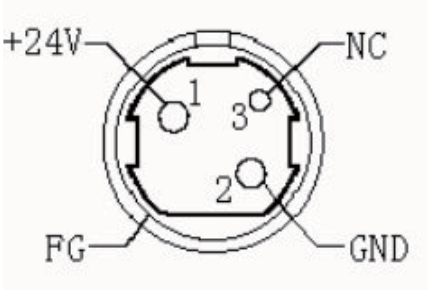

Figure 5-5

PIN No.	SIGNAL NAME
1	+24V
2	GND
3	N.C
SHELL	F.G

Printer end-Unetop DC-002 or similar products, user end-Unetop DC-002 or similar products.

5.6 Bluetooth Interface/Wi-Fi

1) Bluetooth Settings

- Default name: BT Printer
- Default password: 0000 or 1234
- Refer to Zolon POS Printer Bluetooth Manual.pdf for more details.

2) Wi-Fi Settings

Connection method:

- In AP mode, the factory default IP address is 192.168.1.1
- Open the browser to enter the default IP: 192.168.1.1 into the settings interface, the web interface login password is 12345678.
- Refer to WIFI Operation Manual.pdf for more details.

Note: the computer must be connected to the WiFi card to enter the page Setup.

Printing the WIFI information:

- Short press the power button for 3 times, then the printer starts printing the WIFI parameters information.
- Short press the power button for 5 times, then the printer will restore WIFI parameters information (Restore to AP mode). The printer automatically restarts and the boot time is

2~3 seconds.

Status	LED
Power on-Be ready	Fast flash
Fail to be ready	Fast flash After exiting configuration mode, the printing indicates that the WIFI configuration failed and the LED is constant light.
No device connected	Constant light
Equipment connected or connected successfully means it is in working status	Slowly flash
Device disconnect or device connection unsuccessful	Constant light

---

6. TROUBLESHOOTING

Your printer is very reliable, but occasionally problems may occur. This chapter provides information on some common problems you may encounter and how to solve them. If you encounter problems that you can not resolve, contact your dealer for assistance.

6.1 Printer Not Working

Problem Description	Probable Reason	Solution
LED not light, printer not working	Printer no power	Connecting the power supply
	Printer not on	Turn on the printer
	Circuit board broken	Contact with the dealer

6.2 LED Indicator and Beeper

Problem Description	Probable Reason	Solution
Paper LED always on	Paper near end	The roll paper is near end, the printer can work normally
Error LED always on and beeper alarms	Printer Cover open	Close the printer cover
Paper LED and Error LED always on and beeper alarms	Paper end	Reload the roll paper
Error LED blinks and beeper alarms	Thermal print head overheated	Turn the printer off and resume when it cools
	Overvoltage	Print with specified voltage
	Low-voltage	Print with specified voltage

6.3 Troubles Occur During Printing

Problem Description	Probable Reason	Solution
Coloured stripe in the paper	Paper near end	Reinstall the roll paper

Blurred printing or spot	Incorrect roll paper installation	Check if the roll paper is installed
	Unqualified roll paper	Use recommended thermal roll paper
	Dirty thermal head or print roller	Clean the thermal head or print roller
	Low print density	Increase the print density level
	Paper strike	Open the printer cover, check the paper path and remove jammed paper
Paper Jam	Dirty thermal head or print roller	Clean the thermal head or print roller
Vertical missing print words	Thermal head damaged	Contact your dealer for assistance

NOTE: The density of setting, please refer to "Utility Tool Manual"

6.4 Problems Emerge During the Paper Cutting

Problem Description	Probable Reason	Solution
Cutter jam, the movable cutter cannot back	Cutter abrasion, insufficient cutting	Replace the cutter
	Worm gear and worm wheel abrasion	Replace the worm gear and worm wheel
	Motor burnt	Replace the motor
	Paper scraps	Clean the paper scraps on the transmission system
Insufficient cutting	Cutter edge abrasion, paper too thick	Replace the cutter
Paper jam	Thermal printer head over heat	Reduce the density of printing
	Driving too fast	Reduce the printer speed to the limit of thermal printer head
	Wrong paper feeding position	Put the paper parallel with the paper mount and insert into the space between platen roller and the thermal printer head.

NOTE: The density of setting, please refer to "Utility Tool Manual"

6.5 Removing Jammed Paper

Warning: Do not touch the thermal print head because it becomes very hot after printing.

If the printer cover can be opened, operate it according to the next steps.

1) Turn off the printer and pull open cover button.

2) Remove jammed paper, reinstall the roll, and close the printer cover.

---

7. PRINTER CLEANING AND MAINTENANCE

Print quality might be degraded by dust, foreign substance, adhesive substance, or other pollution materials stuck in the printer head or inside the printer.

When dirty, clean the print head as follows:

※ CAUTION

- Make sure to turn off the printer prior to cleaning.
- As the print head gets hot during printing, intending to clean the print head, turn the printer off and wait approximately 2~3 minute before commencement.
- When cleaning the print head, take care not to touch the heated portion of the print head. Print Head is susceptible to damage from static electricity, etc.
- Take care not to allow the print head become scratched and/or damaged in any way.

7.1 Cleaning Head

1) Open the Printer Cover and then use the cleaning pen to clean the head in the direction from the center of the head to the edges.

2) After cleaning the head, do not use the printer until the alcohol used for cleaning evaporates completely (1~2 min) and the printer has completely dried.

7.2 Cleaning Sensors, Roller and/or Paper Path

1) Open the printer cover and then remove the paper.

2) Remove any dust or foreign substance using dry cloth or cotton swab.

3) Soak the cloth or cotton swab in alcohol for medical use and use it to remove adhesive foreign substances or other pollution materials.

4) After cleaning the parts, do not use the printer until the alcohol evaporates completely (1~2 min) and the printer has completely dried.

※ Clean the parts whenever print quality or paper detection degraded.

RF exposure statement

This equipment complies with the FCC RF radiation exposure limits set forth for an uncontrolled environment. This equipment should be installed and operated with a minimum distance of 20cm between the radiator and any part of your body. This equipment meets the exemption from the routine evaluation limits in section 2.5 of RSS-102. It should be installed and operated with a minimum distance of 20cm between the radiator and any part of your body.

Cet équipement est conforme à l'exemption des limites d'évaluation habituelle de la section 2.5 de la norme RSS-102. Il doit être installé et utilisé à une distance minimale de 20 cm entre le

radiateur et toute partie de votre corps.

FCC Warning

This device complies with Part 15 of the FCC Rules. Operation is subject to the following two conditions:

(1) This device may not cause harmful interference, and

(2) this device must accept any interference received, including interference that may cause undesired operation.

NOTE 1: This equipment has been tested and found to comply with the limits for a Class B digital device, pursuant to part 15 of the FCC Rules. These limits are designed to provide reasonable protection against harmful interference in a residential installation. This equipment generates uses and can radiate radio frequency energy and, if not installed and used in accordance with the instructions, may cause harmful interference to radio communications. However, there is no guarantee that interference will not occur in a particular installation. If this equipment does cause harmful interference to radio or television reception, which can be determined by turning the equipment off and on, the user is encouraged to try to correct the interference by one or more of the following measures:

- Reorient or relocate the receiving antenna.

- Increase the separation between the equipment and receiver.

-Connect the equipment into an outlet on a circuit different from that to which the receiver is connected.

-Consult the dealer or an experienced radio/TV technician for help.

NOTE 2: Any changes or modifications to this unit not expressly approved by the party responsible for compliance could void the user's authority to operate the equipment.

IC WARNING

This device contains licence-exempt transmitter(s) that comply with Innovation, Science and Economic Development Canada's licence-exempt RSS(s). Operation is subject to the following two conditions:

(1) This device may not cause interference.

(2) This device must accept any interference, including interference that may cause undesired operation of the device.

L'émetteur/récepteur exempt de licence contenu dans le présent appareil est conforme aux CNR d'Innovation, Sciences et Développement économique Canada applicables aux appareils radio exempts de licence. L'exploitation est autorisée aux deux conditions suivantes:

1. L'appareil ne doit pas produire de brouillage;

2. L'appareil doit accepter tout brouillage radioélectrique subi, même si le brouillage est susceptible d'en compromettre le fonctionnement.

Zolon Technology Co., Ltd.

Manufacturer:	Shenzhen Zolon Technology Co.,Ltd.
Address:	401, Building 3, Shenzhen Software Park, Maling Community, Yuehai Street, Nanshan District, Shenzhen City, Guangdong Province, P.R.C
Tel:	+86 755 86727847
Website:	www.szzolon.com

Zolon continually invests to maintain its high quality products up to date with the latest certifications, therefore a comprehensive list can be requested via the website's contact form or on downloadable product brochures.