BL-R8723DS1

SPECIFICATION

IEEE 802.11b/g/n (1T1R) SDIO WIFI and BT Module

INTERFACE, and HS-UART MIXED INTERFACE

Version: 1.0

<table>
<tr><td>Customer</td><td colspan="3"></td></tr>
<tr><td>Date</td><td colspan="3"></td></tr>
<tr><td>Model Name</td><td colspan="3">BL-R8723DS1</td></tr>
<tr><td>Part NO.</td><td colspan="3"></td></tr>
<tr><td colspan="4">Blink Approve Field</td></tr>
<tr><td>ENGINEER</td><td>QC</td><td colspan="2">SALES</td></tr>
<tr><td></td><td></td><td colspan="2"></td></tr>
<tr><td colspan="4">Customer Approve Field</td></tr>
<tr><td>ENGINEER</td><td>QC</td><td>MANUFACTORY</td><td>PURCHASING</td></tr>
<tr><td></td><td></td><td></td><td></td></tr>
</table>

联系电话：0086-13798358430　　联络人：夏先生

传真:0755-28029002　　邮箱: Xia@b-link.net.cn

网址:www.b-link.net.cn

公司地址：深圳市光明新区观光路华强创意园A1栋10-11层

Shenzhen Bilian Electronic Co.，Ltd

Address: 10 - 11 / F , Block A1 , Huaqiang Creative Industrial Park , Guanguang

Road ,Guangming District, Shenzhen, 518107,PRC
Homepage: www.b-link.net.cn

Contents

1. General Description **2**

2. The range of applying **2**

3. Product Specification **2**

3.1 Function Block diagram 2

3.2 Electrical and Performance Specification 3

3.3Power Supply DC Characteristics 4

3.4 Product Photo 5

3.5 Mechanical Specification 5

3.6 Product Pin Definition 6

4. Supported platform **8**

5. Peripheral Schematic Reference Design **8**

6. Package Information **8**

7. Typical Solder Reflow Profile **9**

8. Precautions for use **9**

1. General Description

BL-R8723DS1 is a small size and low profile of WiFi+BT combo module with LGA (Land-Grid Array) footprint, board size is 12mm*12mm with module height of 1.6mm. It can beeasily manufactured on SMT process and highly suitable for tablet PC, ultra book, mobile device and consumer products. It provides GSPI/SDIO interface for WiFi to connect with host processor and high speed UART interface for BT. It also has a PCM interface for audio data transmission with direct link to external audio codec via BT controller. The WiFi throughput can go up to 150Mbps in theory by using 1x1 802.11n b/g/n technology and Bluetooth can support BT2.1+EDR/BT3.0 and BT4.2.

2. The range of applying

MID, networking camera, STB GPS, E-book, Hard disk player, Network Radios, PSP, etc, the device which need be supported by wireless networking.

3. Product Specification

3.1 Function Block diagram

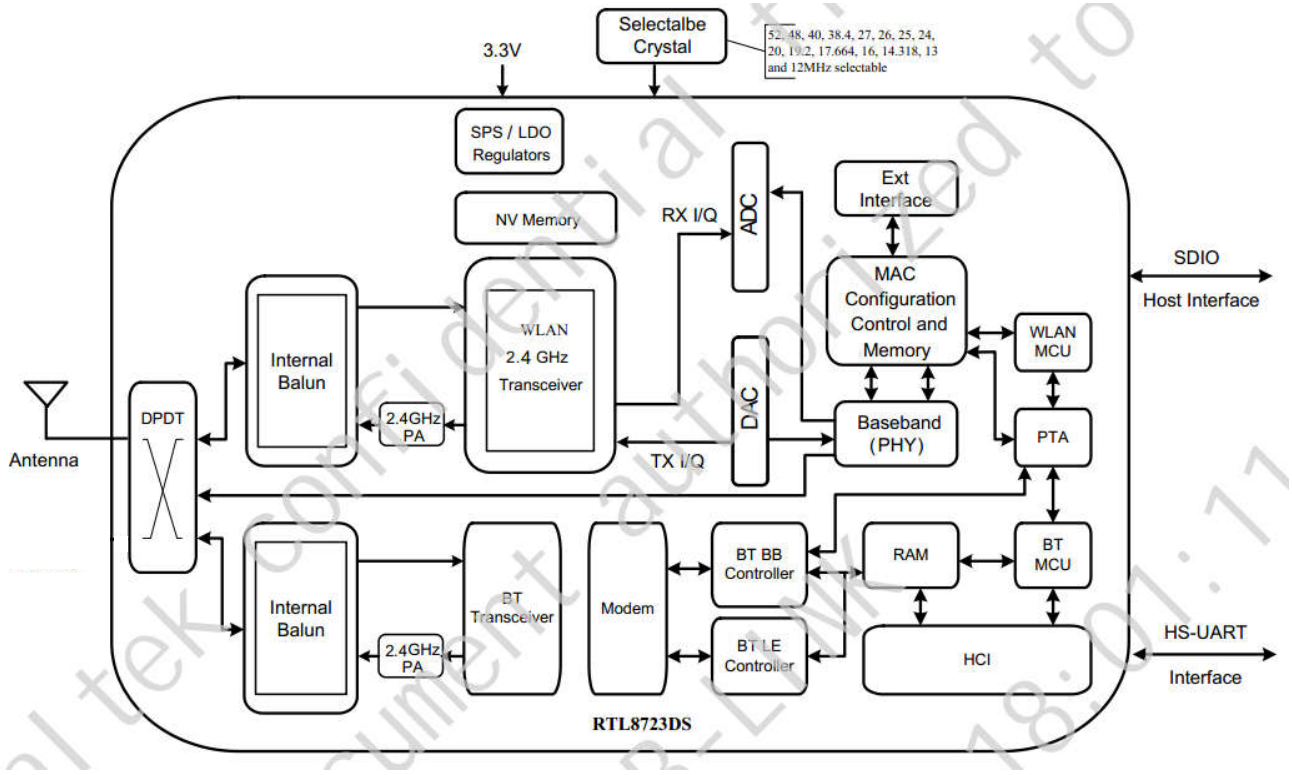

3.2 Electrical and Performance Specification

Item	Description
Product Name	BL-R8723DS1
Major Chipset	RTL8723DS
Host Interface	SDIO 1.1/ 2.0/ 3.0
Standard	**WiFi:** IEEE 802.11b, IEEE 802.11g, IEEE 802.11n, IEEE 802.11d, IEEE 802.11e, IEEE 802.11h, IEEE 802.11i **BT:** V2.1+EDR/BT V3.0/BT V3.0+HS/BT V4.0/V4.2
Frequency Range	2412-2462MHz WiFi; 2402-2480MHz for BT
Modulation Type	**Wifi:** 802.11b: CCK, DQPSK, DBPSK 802.11g: 64-QAM,16-QAM, QPSK, BPSK 802.11n: 64-QAM,16-QAM, QPSK, BPSK **BT:** 8DPSK, π /4 DQPSK, GFSK
Working Mode	Infrastructure, Ad-Hoc
Data Transfer Rate	**Wifi:** 802.11b: 11, 5.5, 2, 1 Mbps 802.11g: 54, 48, 36, 24, 18, 12, 9, 6 Mbps 802.11n: MCS 0 to 7 for HT20MHz ;MCS 0 to 7 for HT40MHz **B T:** 1 Mbps for Basic Rate 2,3 Mbps for Enhanced Data Rate
Spread Spectrum	IEEE 802.11b: DSSS (Direct Sequence Spread Spectrum) IEEE 802.11g/n:OFDM (Orthogonal Frequency Division Multiplexing) BT: FHSS(Frequency-Hopping Spread Spectrum)
Sensitivity @PER	**WiFi:** 135M:-68Bm@10%PER 54M:-74Bm@10%PER; 11M:-86dBm@10%PER ; 6M: -89Bm@10%PER ; 1M: -92dBm@10%PER **BT:** -89dBm@1Mbps, -85dBm@2Mbps, -83dBm@3Mbps;
RF Power(Typical)	17.0dBm (max) for WiFi; 8.0dBm (max) for BT
Antenna type	Connect to the external antenna through the half hole
The transmit distance	**WiFi:** Indoor 100M, Outdoor 300M, according the local environment **BT:** 10m MAX.
Dimension(L*W*H)	12.0*12.0*1.6mm (LxWxH) , Tolerance: +-0.15mm
Power supply	3.3V +/-0.2V
Power Consumption	standby mode 65mA@3.3V , TX mode 285mA@3.3V
Clock source	24MHz
Working Temperature	0°C to +50°C

Storage temperature	-40°C to +85°C

3.3Power Supply DC Characteristics

Terms	**Contents**			
Specification : IEEE802.11b				
Mode	DSSS / CCK			
Frequency	2412 – 2484MHz			
Data rate	1, 2, 5.5, 11Mbps			
DC Characteristics	min	Typ.	max.	unit
TX mode	245	285	307	mA
Rx mode	64	64	65	mA
Sleep mode	63	64	65	mA
Specification : IEEE802.11g				
Mode	OFDM			
Frequency	2412 - 2484MHz			
Data rate	6, 9, 12, 18, 24, 36, 48, 54Mbps			
DC Characteristics	min	Typ.	max.	unit
TX mode	160	230	270	mA
Rx mode	64	64	65	mA
Sleep mode	63	65	65	mA
Specification : IEEE802.11n				
Mode	OFDM			
Frequency	2412 - 2484MHz			
Data rate	6.5, 13, 19.5, 26, 39, 52, 58.5, 65Mbps			
DC Characteristics	min	Typ.	max.	unit
TX mode	155	207	283	mA
Rx mode	68	68	69	mA
Sleep mode	67	68	69	mA

3.4 Product Photo

TOP

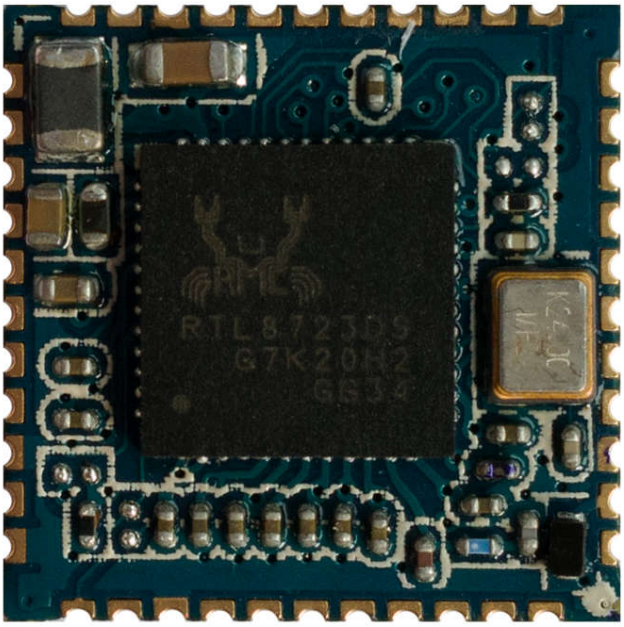

Bottom

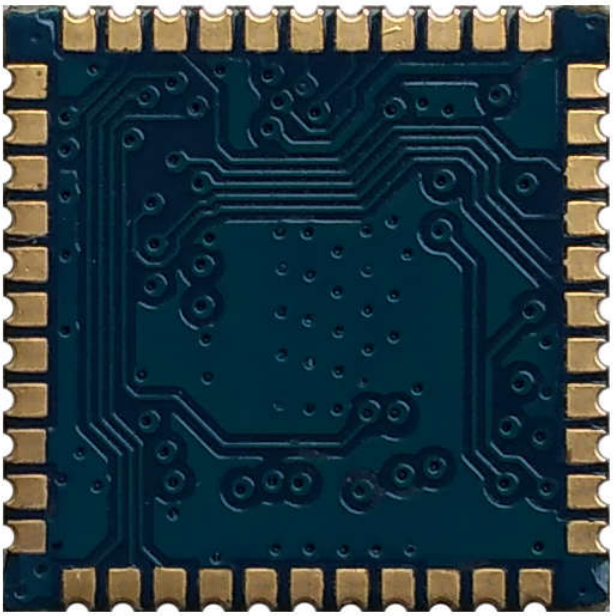

3.5 Mechanical

Specification ***Tolerance:***

+-0.15mm

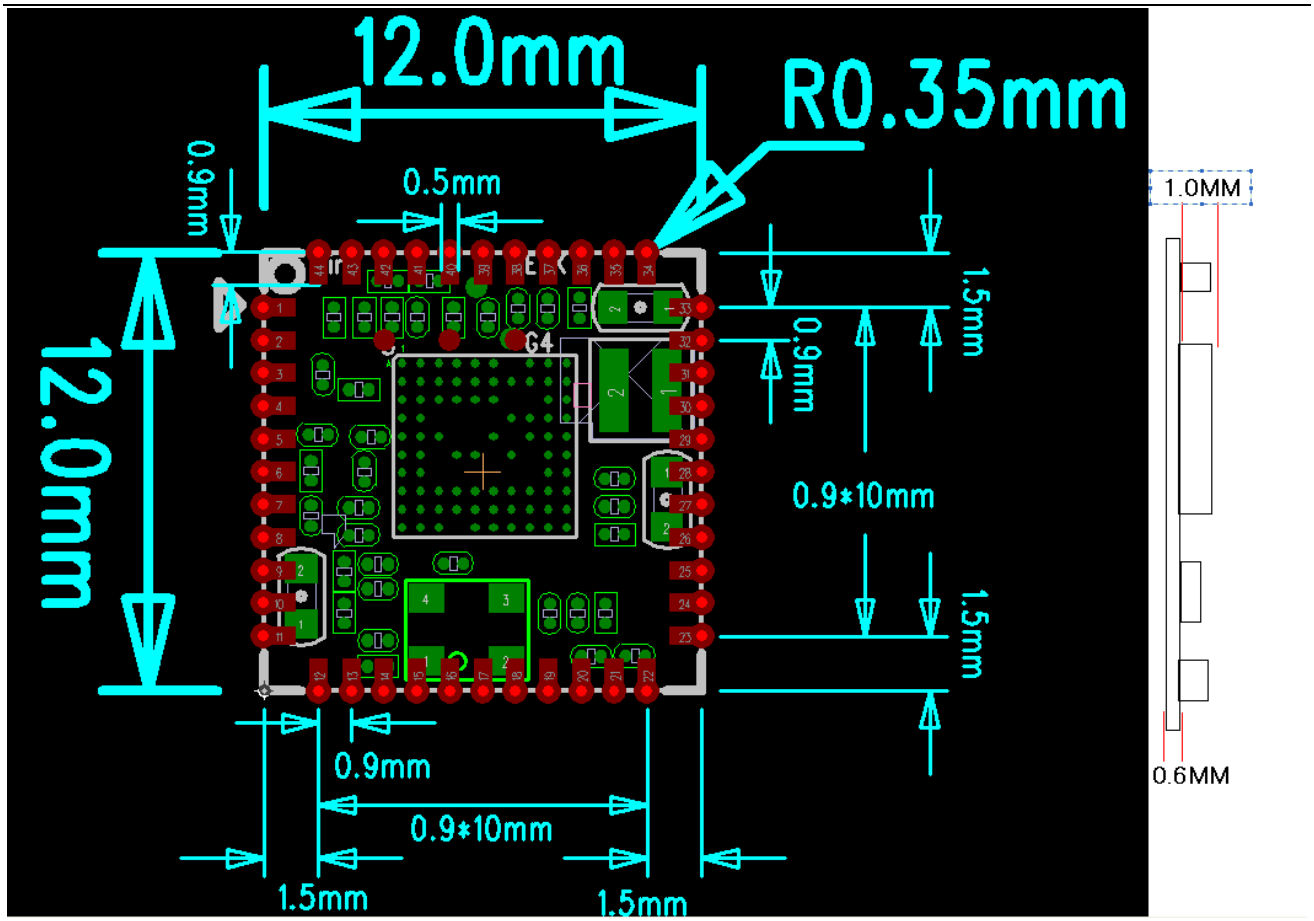

3.6 Product Pin Definition

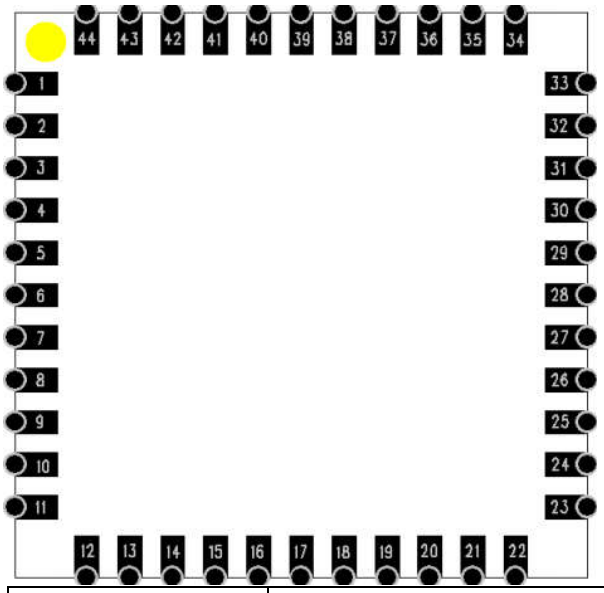

Pin No:	Function	Description
1	GND	Grond
2	WIFI/BT_ANT	WIFI/BT_ANT
3	GND	Grond

4,5	NC	NC
6	BT_WAKE	HOST wake-up Bluetooth device
7	BT_HOST_WAKE	Bluetooth device to wake-up HOST
8	NC	NC
9	VABT	3.3V
10,11	NC	NC
12	WL_DSI#	Shared with GPIO9 This Pin Can Ex ternally Shutdown the RTL8723DS WLAN function when BT_DISn is Pulled Low. When this pin deasserted, SDIO interface will be disabled. This pin can also support the WLAN Ra dio-off function with host interface remaining connected.
13	WL_HOST_WAKE	WLAN to wake-up HOST
14	SD_D2	SDIO data line 2
15	SD_D3	SDIO data line 3
16	SD_CMD	SDIO command line
17	SD_CLK	SDIO CLK line
18	SD_D0	SDIO data line 0
19	SD_D1	SDIO data line 1
20	GND	Grond
21	NC	NC
22	VDD_IO	3.3V
23	NC	NC
24	SUSCLK_IN	Shared with GPIO6. External 32K or RTC clock input with 1.8V ~ 3.3V swing. This clock source is configured by BT and WL FW, respectively.
25	PCM_DOUT	PCM Data output
26	PCM_CLK	PCM Clock
27	PCM_DIN	PCM data input
28	PCM_SYNC	PCM sync signal
29,30	NC	NC
31	GND	Grond
32	NC	NC
33	GND	Grond
34	BT_DIS#	General Purpose Input/Output Pin
35	NC	NC
36	GND	Grond
37,38,39,40	NC	NC
41	GND	Grond

42	UART_OUT	HOST Data output
43	UART_IN	HOST Data input
44	UART_CTS	HOST_CTS

4. Supported platform

Operating System	CPU Framework	Driver
WIN2000/XP/VISTA/WIN7	X86 Platform	Enable
LINUX2.4/2.6	ARM, MIPSII	Enable
WINCE5.0/6.0	ARM ,MIPSII	Enable

5. Peripheral Schematic Reference Design

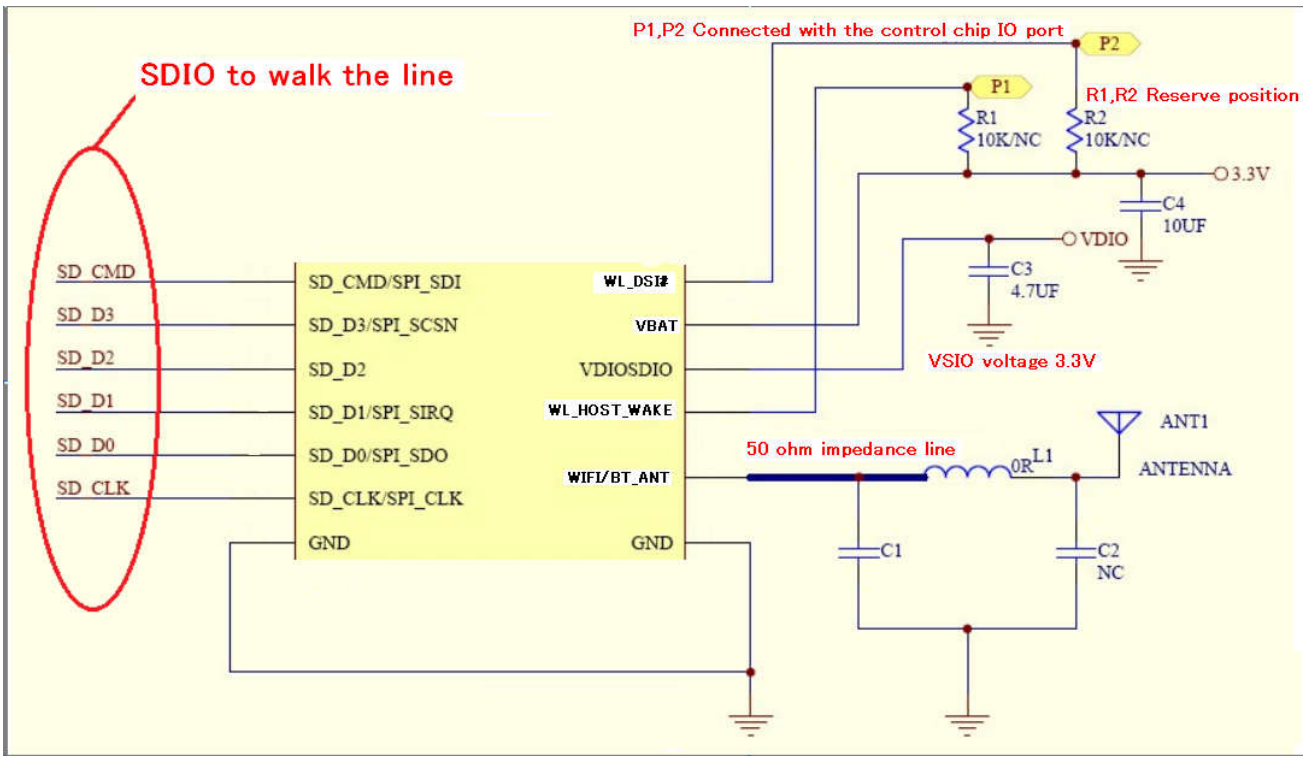

6. Package Information

7. Typical Solder Reflow Profile

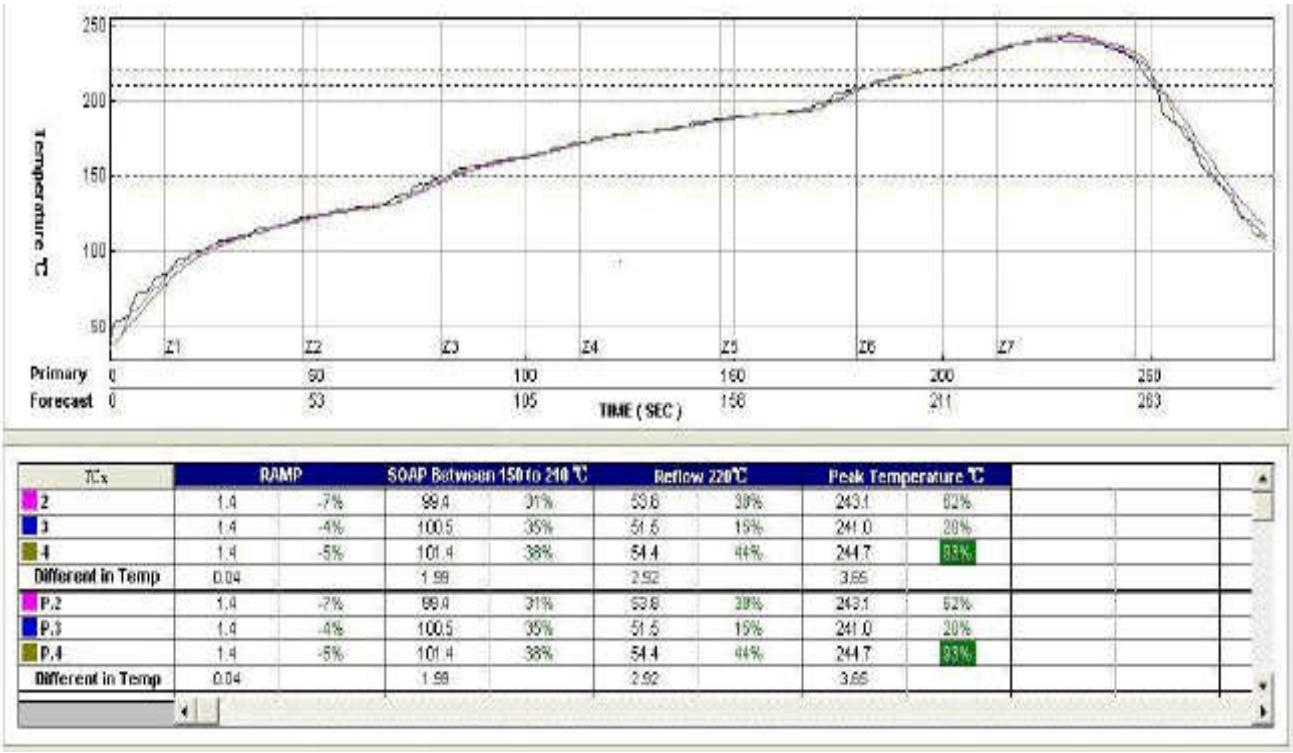

TCs	RAMP		SOAP Between 150 to 240 ℃		Reflow 220℃		Peak Temperature ℃	
2	1.4	-7%	99.4	31%	53.6	38%	243.1	62%
3	1.4	-4%	100.5	35%	51.5	15%	241.0	20%
4	1.4	-5%	101.4	38%	54.4	44%	244.7	93%
Different in Temp	0.04		1.98		2.92		3.65	
P.2	1.4	-7%	99.4	31%	53.6	38%	243.1	62%
P.3	1.4	-4%	100.5	35%	51.5	15%	241.0	20%
P.4	1.4	-5%	101.4	38%	54.4	44%	244.7	93%
Different in Temp	0.04		1.98		2.92		3.65	

8. Precautions for use

1. Pls handle the module under ESD protection.
2. Reflow soldering shall be done according to the solder reflow profile. Peak temperature 245℃.
3. Products require baking before mounting if humidity indicator cards reads >30% temp <30 degree C, humidity < 70% RH, over 96 hours.
   Baking condition: 125 degree C, 12 hours
   Baking times: 1 time
4. Storage Condition: Moisture barrier bag must be stored under 30 degree C, humidity under 85% RH. The calculated shelf life for the dry packed product shall be a 12 months from the bag seal date. Humidity indicator cards must be blue, <30%.

FCC Statement

This device complies with part 15 of the FCC rules. Operation is subject to the following two conditions: (1) thi s device may not cause harmful interference, and (2) this device must accept any interference received, incl uding interference that may cause undesired operation.

Changes or modifications not expressly approved by the party responsible for compliance could void the user' s authority to operate the equipment.

NOTE: This equipment has been tested and found to comply with the limits for a Class B digital device, pursua nt to part 15 of the FCC Rules. These limits are designed to provide reasonable protection against harmful inte rference in a residential installation. This equipment generates uses and can radiate radio frequency energy a nd, if not installed and used in accordance with the instructions, may cause harmful interference to radio com munications. However, there is no guarantee that interference will not occur in a particular installation. If this equipment does cause harmful interference to radio or television reception, which can be determined by turn ing the equipment off and on, the user is encouraged to try to correct the interference by one or more of the following measures:

- Reorient or relocate the receiving antenna.
- Increase the separation between the equipment and receiver.
- Connect the equipment into an outlet on a circuit different from that to which the receiver is connected.
- Consult the dealer or an experienced radio/TV technician for help important announcement

Important Note:

Radiation Exposure Statement

This equipment complies with FCC radiation exposure limits set forth for an uncontrolled environment. This equipment should be installed and operated with minimum distance

20cm between the radiator and your body.

This transmitter must not be co-located or operating in conjunction with any other antenna or transmitter.

Country Code selection feature to be disabled for products marketed to the US/Canada.

This device is intended only for OEM integrators under the following conditions:

1. The antenna must be installed such that 20 cm is maintained between the antenna and users, and
2. The transmitter module may not be co-located with any other transmitter or antenna,
3. For all products market in US, OEM has to limit the operation channels in CH1 to CH11 for 2.4G band by supplied firmware programming tool. OEM shall not supply any tool or info to the end-user regarding to Regulatory Domain change. (if modular only test Channel 1-11)

As long as the three conditions above are met, further transmitter testing will not be required. However, the OEM integrator is still responsible for testing their end-product for any additional compliance requirements required with this module installed.

Important Note:

In the event that these conditions cannot be met (for example certain laptop configurations or co-location with another transmitter), then the FCC authorization is no longer considered valid and the FCC ID cannot be used on the final product. In these circumstances, the OEM integrator will be responsible for re-evaluating the end product (including the transmitter) and obtaining a separate FCC authorization.

End Product Labeling

The final end product must be labeled in a visible area with the following" Contains FCC ID: **2AV5VBL-M8723DS1** "

Manual Information to the End User

The OEM integrator has to be aware not to provide information to the end user regarding how to install or remove this RF module in the user's manual of the end product which integrates this module.

The end user manual shall include all required regulatory information/warning as show in this manual.

Antenna information

The **IEEE 802.11b/g/n (1T1R) SDIO WIFI and BT Module** has been designed to pass certification with the antenna listed below. The required antenna impedance is 50 ohms.

Integration instructions for host product manufacturers according to KDB 996369 D03 OEM Manual v01

2.2 List of applicable FCC rules

CFR 47 FCC PART 15 SUBPART C has been investigated. It is applicable to the modular transmitter

2.3 Specific operational use conditions

This module is stand-alone modular. If the end product will involve the Multiple simultaneously transmitting condition or different operational conditions for a stand-alone modular transmitter in a host, host manufacturer have to consult with module manufacturer for the installation method in end system.

2.4 Limited module procedures

This module is Limited single modular without shielding, host manufacturer have to consult with module manufacturer for the module limiting conditions when integrate the module in the host. module manufacturer should reviews detailed test data or host designsprior to giving the host manufacturer approval.

2.5 Trace antenna designs

Not applicable

2.6 RF exposure considerations

This equipment complies with FCC radiation exposure limits set forth for an uncontrolled environment. This equipment should be installed and operated with minimum distance 20cm between the radiator & your body.

2.7 Antennas

This radio transmitter **2AV5VBL-M8723DS1** has been approved by Federal Communications Commission to operate with the antenna types listed below, with the maximum permissible gain indicated. Antenna types not included in this list that have a gain greater than the maximum gain indicated for any type listed are strictly prohibited for use with this device.

Model	Type	Connector	Peak gain (dBi)				
			2400-2483.5 MHz	5150-5250 MHz	5250-5350 MHz	5470-5725 MHz	5725-5850 MHz
2400-2483.5 MHz	External Antenna	/	2.0dBi	/	/	/	/

2.8 Label and compliance information

The final end product must be labeled in a visible area with the following" Contains FCC ID:2AV5VBL-M8723DS1".

2.9 Information on test modes and additional testing requirements

Host manufacturer which install this modular with limit modular approval should perform the test of radiated emission and spurious emission according to FCC part 15C:15.231 and 15.209 requirement, only if the test result comply with FCC part 15.231 and 15.209 requirement, then the host can be sold legally.

2.10 Additional testing, Part 15 Subpart B disclaimer

Host manufacturer is responsible for compliance of the host system with module installed with all other applicable requirements for the system such as Part 15 B.

ISED Statement

- English: This device complies with Industry Canada license - exempt RSS standard(s). Operation is subject to the following two conditions: (1) This device may not cause interference, a nd (2) This device must accept any interference, including interference that may cause undesired operation of the device.

The digital apparatus complies with Canadian CAN ICES - 3 (B)/NMB - 3(B).

- French: Le présentappareilestconforme aux CNR d'Industrie Canada applicables aux appareils radio exempts de licence. L'exploitationestautorisée aux deux conditions suivantes: (1) l'appareil ne doit pas produire de brouillage, et (2) l'utilisateur de l'appareildoit accepter tout brouillageradi oélectriquesubi, mêmesi le brouillageest susceptible d'encompromettre le fonctionnement.

This radio transmitter (ISED certification number: **26005-BLM8723DS1**) has been approved by Industry Canada to operate with the antenna types listed with the maximum permissible gain indicated. Antenna types not included in this list, having a gain greater than the maximum gain indicated for that type, are strictly prohibited for use with this device.

Le présent émetteur radio (ISED certification number: **26005-BLM8723DS1**) a été approuvé par Industrie Canada pour fonctionner avec les types d'antenne énumérés ci-dessous et ayant un gain admissible maximal. Les types d'antenne non inclus dans cette liste, et dont le gain est supérieur au gain maximal indiqué, sont strictement interdits pour l'exploitation de l'émetteur.

Radiation Exposure Statement

This equipment complies with Canada radiation exposure limits set forth for an uncontrolled environment. This equipment should be installed and operated with minimum distance 20cm between the radiator & your body.

Déclaration d'exposition aux radiations

Cet équipement est conforme Canada limites d'exposition aux radiations dans un environnement non contrôlé. Cet équipement doit être installé et utilisé à distance minimum de 20cm entre le radiateur et votre corps.

This device is intended only for OEM integrators under the following condition:

The transmitter module may not be co-located with any other transmitter or antenna.

As long as the condition above is met, further transmitter test will not be required. However, the OEM integrator is still responsible for testing their end-product for any additional compliance requirements required with this module installed.

Cet appareil est conçu uniquement pour les intégrateurs OEM dans les conditions suivantes:

Le module émetteur peut ne pas être coïmplanté avec un autre émetteur ou antenne.

Tant que les 1 condition ci-dessus sont remplies, des essais supplémentaires sur l'émetteur ne seront pas nécessaires. Toutefois, l'intégrateur OEM est toujours responsable des essais sur son produit final pour toutes exigences de conformité supplémentaires requis pour ce module installé.

Important Note:

In the event that these conditions cannot be met (for example certain laptop configurations or co-location with another transmitter), then the Canada authorization is no longer considered valid and the IC cannot be used on the final product. In these circumstances, the OEM integrator will be responsible for re-evaluating the end product (including the transmitter) and obtaining a

separate Canada authorization.

Note Importante:

Dans le cas où ces conditions ne peuvent être satisfaites (par exemple pour certaines configurations d'ordinateur portable ou de certaines co-localisation avec un autre émetteur), l'autorisation du Canada n'est plus considéré comme valide et l' IC ne peut pas être utilisé sur le produit final. Dans ces circonstances, l'intégrateur OEM sera chargé de réévaluer le produit final (y compris l'émetteur) et l'obtention d'une autorisation distincte au Canada.

End Product Labeling

The final end product must be labeled in a visible area with the following: Contains IC: **26005-BLM8723DS1**.

Plaque signalétique du produit final

Le produit final doit être étiqueté dans un endroit visible avec l'inscription suivante: Contient des IC: **26005-BLM8723DS1**

Manual Information to the End User

The OEM integrator has to be aware not to provide information to the end user regarding how to install or remove this RF module in the user's manual of the end product which integrates this module.

The end user manual shall include all required regulatory information/warning as show in this manual.

Manuel d'information à l'utilisateur final

L'intégrateur OEM doit être conscient de ne pas fournir des informations à l'utilisateur final quant à la façon d'installer ou de supprimer ce module RF dans le manuel de l'utilisateur du produit final qui intègre ce module.

Le manuel de l'utilisateur final doit inclure toutes les informations réglementaires requises et avertissements comme indiqué dans ce manuel.