Mini color screen

Mobile Radio

USER'S MANUAL

Thank you for your purchase of the product.
This multi-band radio will deliver instant reliable communication.
Please read this manual carefully before use!

BEFORE PROCEEDING INSURE:

- Qualified technicians shall service this equipment only. Do not modify the radio for any reason.
- Use only orginal supplied or approved accessories.
- Turn off your radio prior to entering any area with explosive and flammable materials. Do NOT USE your transceiver at a gas/fuel station.
- For vehicles with an air bag, do not mount your radio in the area over an air bag or in the air bag deployment area.
- Do not expose the radio to direct sunlight over a long time, nor place it close to a heating source.
- If the unit emits smoke or an odor, you should immediately cut off the power supply. Then send the radio to the nearest service center or dealer.
- Do not operate the mobile transceiver on high power unless it is necessary. Do not transmit for long periods of time, as it may overheat the transceiver.
- Keep the unit away from dusty, damp and wet environments.
- Use the correct power supply (~13.8V); do not use incorrect or higher voltage (e.g. 24V).

Table of Contents

Getting Started **1**
- Unpacking and Inspecting 1
- Overview of the Front Panel 2
- Overview of the Rear Ports 4
- Hand Held MIC Keys and Description 5
- Color Display and Icon Descriptions 7
- Antenna Basics 9

Basic Shortcuts And Use **11**
- Pound # Key (Keypad Lock) 11
- Star ✱ Key 11
- Turning the unit ON 11
- Turning the unit OFF 11
- Adjusting the volume 11
- Making a call 12
- Channel selection 12
- Monitor Both VFO & MR Modes 13

Menu Quick Review **14**
- Quick Menu Settings 14
- Menu definitions 21

Programming **28**
- Frequency Mode vs. Channel Mode 28

Other Settings **29**
- Toggle from High to Low Power 29
- Storing an FM Radio Station and Scanning 29
- Keypad Lock-out 29
- PTT ID Setting 29
- DTMF RX Settings 29
- DTMF TX Settings 29
- Remote Stun 30
- Remote Kill 30
- Remote Revive 31
- DTMF Receive Settings, Transmit Setting (Call Key) 31
- 2TONE Receive Settings, Transmit Setting (Call Key) 31
- 5Tone Receive Settings, Transmit Setting (Call Key) 32
- Scanning modes 32

Technical Specifications **33**

Getting Started

■ Unpacking and Inspecting

- Please check the packaging of your radio for any signs of damage.
- Carefully open the box, and confirm your received the items listed below.
- If you find the radio or the included accessories are damaged or lost, immediately contact your dealer.

What's in the Box

Mobile Radio

Microphone

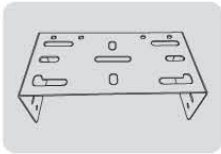
Mounting Bracket

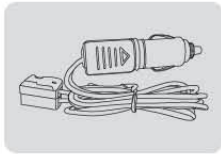
Power Cable

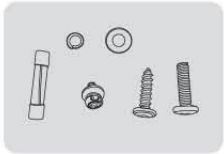
Mounting Screws and Fuse

■ Overview of the Front Panel

Model 1

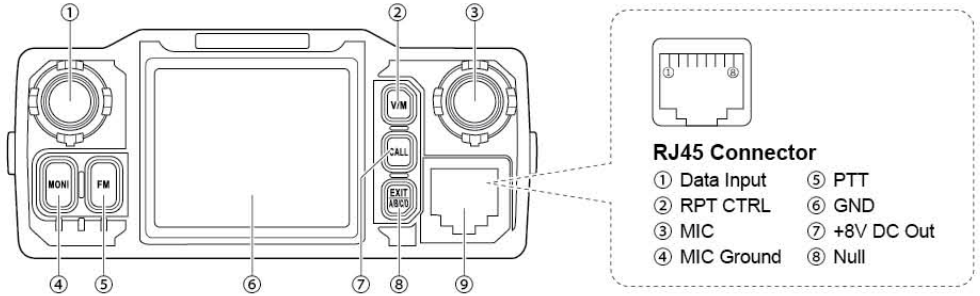

① Power, On/Off Press + Volume Knob
② V/M Mode Switch (Channel/Frequency)
③ Confirm Key Press +Main Selector (Menu Knob)
④ Monitor function
⑤ FM radio function key
⑥ Display screen
⑦ Call key
⑧ Exit Menu + A/B/C/D signal switching + alarm function
⑨ Microphone Connector

[CALL]: when in standby, press to send caller ID (ANI) in the selected signaling mode; while transmitting, press to send activate signaling.

[MONI]: press to turn on the squelch, repeat to turn off the squelch.

[V/M]: press to switch between channel mode and frequency mode.

[EXIT A/B/C/D]: press to choose between A,B,C or D frequencies --- Or exit function mode.

[FM]: press to enter and exit FM radio.

Model 2

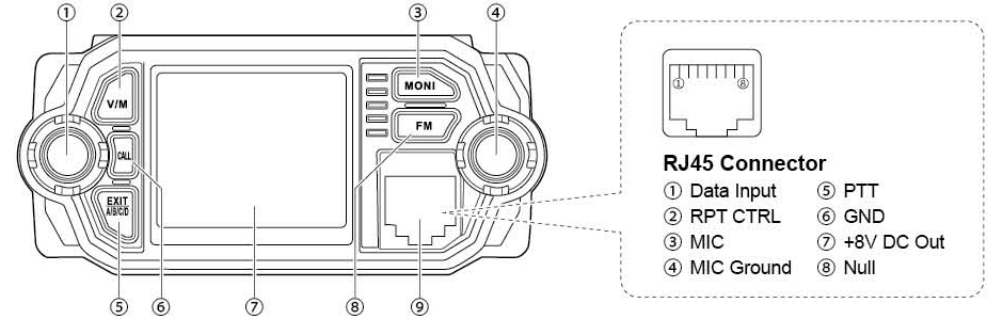

① Power, On/Off Press + Volume Knob
② V/M Mode Switch (Channel/Frequency)
③ Monitor function
④ Confirm Key Press +Main Selector (Menu Knob)
⑤ Exit Menu + A/B/C/D signal switching + alarm function
⑥ Call key
⑦ Display screen
⑧ FM radio function key
⑨ Microphone Connector

[CALL]: when in standby, press to send caller ID (ANI) in the selected signaling mode; while transmitting, press to send activate signaling.

[MONI]: press to turn on the squelch, repeat to turn off the squelch.

[V/M]: press to switch between channel mode and frequency mode.

[EXIT A/B/C/D]: press to choose between A,B,C or D frequencies --- Or exit function mode.

[FM]: press to enter and exit FM radio.

■ Overview of the Rear Ports

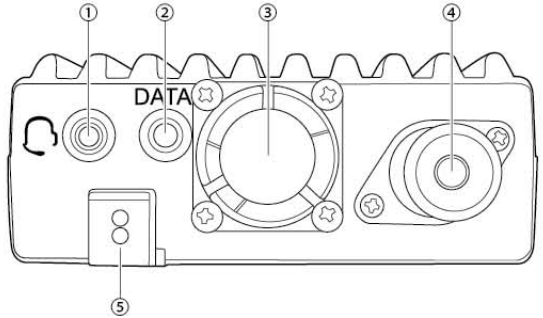

① TRRS Line Out: Includes PTT/Microphone/Audio-out/GND
② DATA, Programming Jack
③ Cooling Fan
④ SO-239 RF Antenna Connector: Connects to PL-259 Antennas
⑤ DC Power Input (13.8V–7A Peak)

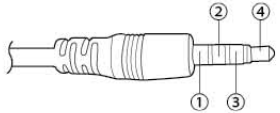

TRRS Line-Out Connector

① GND ② SP
③ MIC ④ PTT

■ Hand Held MIC Keys and Description

① **"MENU"** : Function key
VFO/MR Toggle (Long Press)
② **"UP"** : Higher frequency
③ **"DOWN"** : Lower frequency
④ **"EXIT"** : Exit the AB channel switch, alarm function
Alarm Activate (Long Press)
⑤ **"*/SCAN"** : Scanning function
⑥ **"#/LOCK"** : High / Low Power Toggle
Keyboard Lock (Long Press)
⑦ **"0"** : Number 0
⑧ **"1"** : Number 1
⑨ **"2"** : Number 2
⑩ **"3"** : Number 3
⑪ **"4"** : Number 4
⑫ **"5"** : Number 5
⑬ **"6"** : Number 6
⑭ **"7"** : Number 7
⑮ **"8"** : Number 8
⑯ **"9"** : Number 9

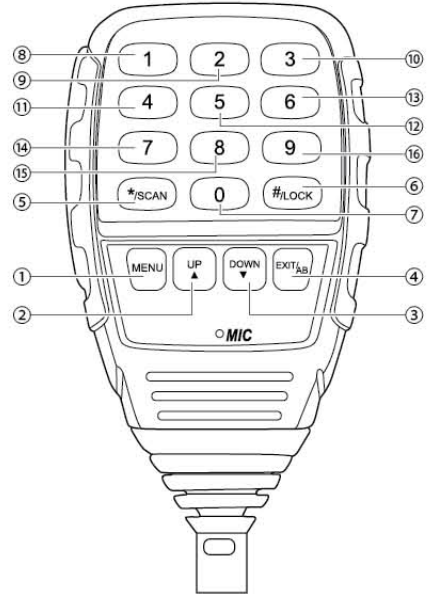

① **"MENU"** : Function key
VFO/MR Toggle (Long Press)
② **"UP"** : Higher frequency
③ **"DOWN"** : Lower frequency
④ **"EXIT"** : Exit the AB channel switch, alarm function
Alarm Activate (Long Press)
⑤ **"*/SCAN"** : Scanning function
⑥ **"#/LOCK"** : High / Low Power Toggle
Keyboard Lock (Long Press)
⑦ **"0"** : Number 0
⑧ **"1"** : Number 1
⑨ **"2"** : Number 2
⑩ **"3"** : Number 3
⑪ **"4"** : Number 4
⑫ **"5"** : Number 5
⑬ **"6"** : Number 6
⑭ **"7"** : Number 7
⑮ **"8"** : Number 8
⑯ **"9"** : Number 9

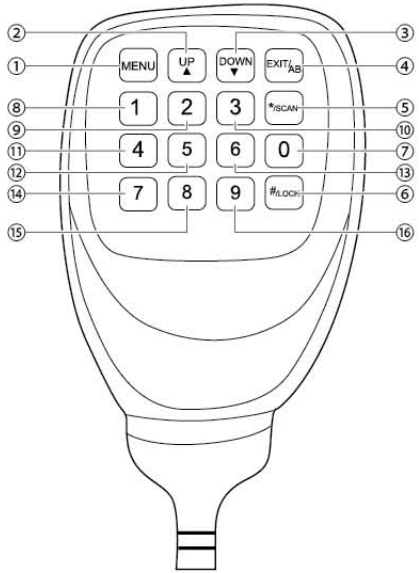

■ Color Display and Icon Descriptions

The Top Line on the LCD will show the current selected channel's settings at a glimpse:

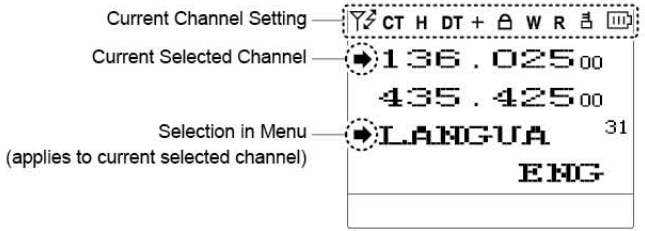

Icon	Description	Icon	Description	Icon	Description
	Channel allowed to TX & RX	**DCS**	DCS Enabled (TX,RX or Both)	**+**	Positive Offset (Freq. Mode)
	Channel allowed to RX Only	**L**	Transmit Power: Low	**–**	Negative Offset (Freq. Mode)
	Channel allowed to TX Only	**H**	Transmit Power: High	**±**	Offset Enabled (Chan. Mode)
	Channel disabled to TX or RX	**2T**	2Tone Calling Enabled	**N**	Channel set to Narrowband
	Keypad is Locked	**5T**	5Tone Calling Enabled	**W**	Channel set to Wideband
CT	CTCSS Enabled (TX, RX or Both)	**DT**	DTMF Calling Enabled	**R**	Channel Reverse Enabled
	Battery Strength (Weak Battery Indicator)				

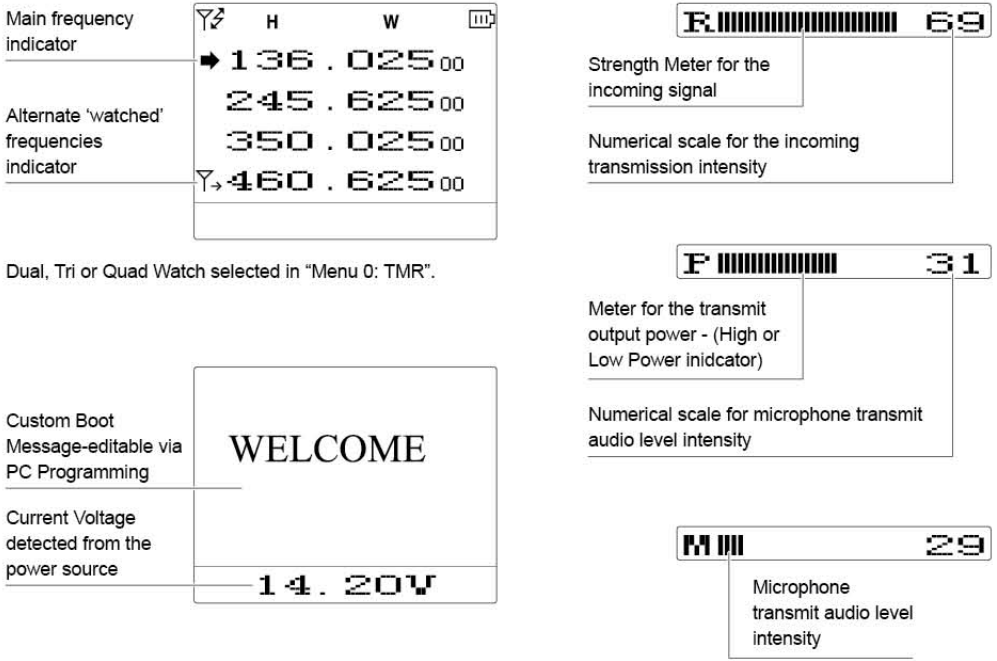

Antenna Basics

Your Mobile Radio Kit does not include an Antenna. It is VERY Important to NOT transmit without a antenna or dummy load attached to the mobile radio. Doing so, will cause harm to the internal components of your radio.

You will want to choose a suitable antenna for the bands you plan on transmitting and receiving on.

If you plan on transmitting on 145MHz you will want to ensure you have picked an antenna that states it is capable of working with 145MHz. If an antenna is not properly tuned for the frequency you transmit on – it can cause damage with the reflected power going back into the radio.

Pick an antenna with SWR of less than 1.5:1 to safely transmit.

Grounding Plane

Antennas require an appropriate grounding plane to properly work.

Magnetically Mounted Antennas

These antennas must be grounded to a metal surface, such as a vehicle body. Magnetic base antennas do not properly operate unless they are fully magnetically grounded first.

NMO or PL-259 Base Antennas

These antennas will normally require a base or mobile hardware kit. These kits are grounded either through: drill or clamp inserts on vehicles, magnetically mounted, or available as stationary base hardware kits. Some antennas may include a base station grounding plane kit.

Antenna Requirements

Antenna SWR Rating : 1.5:1 or less (on the radio frequencies in use.)

Antenna Impedance : 50 ohm (use 50 ohm rated coax and coax connectors).

Antenna Grounding : Ensure the antenna is mounted with a grounding plane.

⚠ *Visually Inspect Coax/Connectors for any Slits or Damage – moisture should not be allowed to penetrate fittings or your coax.*

⚠ *To maximize the life of your radio, it is important to understand antenna basics before transmitting on your radio, transmitting without an antenna, or with high SWR (Standing Wave Ration) – can void warranty support.*

⚠ *An Active SWR Meter is a great tool to have when selecting an antenna for your needs. You can monitor and confirm that your SWR is within safe levels when setting up your radio for the first time (periodically checking SWR and your antenna set-up is advised).*

Basic Shortcuts And Use

■ Pound # Key (Keypad Lock)

To enable or disable the keypad lock, press and hold the **[#/LOCK]** key for about two seconds.

A quick toggle of the # will alternate power levels from High power to Low power.

The keypad lock will lock both the main radio buttons itself and also the handheld keypad.

The PTT/MONI and Power Buttons will not be locked when enabled.

■ Star ∗ Key

A short momentary press of the key enables the reverse function (reverses the TX/RX settings according to Offset settings).

When listening to broadcast FM a momentary press will start the scanning. Scanning in broadcast FM will stop as soon as an active station is found.

To enable scanning, press and hold the **[∗/SCAN]** key for about two seconds.

■ Turning the unit ON

To turn the unit on, simply push and hold the volume knob until it turns on. If your radio powers on correctly there should be an audible tone after about one second and the display will show a message or flash the LCD depending on settings.

■ Turning the unit OFF

To turn the unit off, simply push and hold the volume knob until it turns off. The unit is now off.

■ Adjusting the volume

To turn up the volume, turn the volume knob clockwise.

To turn the volume down, turn the volume/power knob counter-clock-wise.

⚠ *By using the monitor function (MONI button), you can more easily adjust your volume by adjusting it to the un-squelched static.*

Making a call

Press and hold the PTT button on the side of the handheld mic to transmit. While transmitting, speak approximately 3-5cm (1-2 inches) from the microphone. When you release the PTT your transceiver will go back to its receive mode.

Channel selection

There are two modes of operation: Frequency (VFO) mode, and Channel or Memory (MR) mode.

For everyday use, Channel (MR) mode is going to be a whole lot more practical than Frequency (VFO) mode. However, Frequency (VFO) mode is very handy for experimentation out in the field.

Frequency (VFO) mode is also used for programming channels into memory. For details on how to program your transceiver see Chapter 4, Programming.

Ultimately which mode you end up using will depend entirely on your use case.

◇ Frequency (VFO) mode

In Frequency (VFO) mode you can navigate up and down the band by using the **[UP▲]** and **[DOWN▼]** keys (or rotating the selector knob).

Each press (or rotation click) will increment or decrement your frequency according to the frequency step you've set your transceiver to (Menu Item 1: Step).

You can also input frequencies directly on your numeric keypad with kilohertz accuracy. However, the radio will floor to the nearest frequency that corresponds to your frequency step, in other words, when you input frequencies with greater than 1kHz resolution (such as 145.6875 MHz in the example below), always round your input up.

⚠ *Just because you can program in a channel does not mean you're automatically authorized to use that frequency.*

⚠ *Transmitting on frequencies you're not authorized to operate on is illegal, and in most jurisdictions a serious offence. If you get caught transmitting without a license you can and will get fined, and in worst case sent to jail.*

⚠ *However, it is legal in most jurisdictions to listen. Contact your local regulatory body for further information on what laws, rules and regulations apply to your area.*

◇ Channel (MR) mode

The use of Channel (MR) mode is dependent on actually having programmed in some channels to use. To find out more on how to program channels see Chapter Programming.

Once you have channels programmed and ready, you can use the **[UP▲]** and **[DOWN▼]** keys to navigate between channels (or Rotate the Selector Knob).

!If you have channels programmed with Transmit power set to Low, you can use the key to momentarily switch over to high power if you're having trouble getting through.

Monitor Both VFO & MR Modes

You can toggle from VFO and MR (Memory Recall) mode by either pressing the **[V/M]** button on the front of your radio, or you can toggle modes from the Handheld Mic by a long press of the **[MENU]** button.

The VFO/MR mode will only toggle on the current selected A/B/C/D line – while the other channel lines will remain on channel or memory mode as they were selected.

This allows you to monitor channel and frequency mode simultaneously.

Menu Quick Review

■ Quick Menu Settings

To set the Menu options from the Mobile body use the M Press the selector knob on the radio body (or the Menu Key on the microphone) to select and confirm the changes, while rotating the selector knob (or using the microphone arrow keys) will change your settings.

0. **[Enter Menu]+[0]: TMR**
   This mode selects what displays are monitored in the background besides the primary selected channel. You can mix and match between all or partial channels to allow dual, tri, or quad watch.
1. **[Enter Menu]+[1]: STEP**
   Set the frequency increments step in VFO mode: 2.5kHz, 5kHz, 6.25kHz, 10kHz, 12.5kHz, 25kHz selectable.
2. **[Enter Menu]+[2]: SQL**
   Sets the receiver squelch level: 0 is OFF, 1 is the lowest setting through 9 which is the highest setting.
3. **[Enter Menu]+[3]: TXP**
   Sets the transmit power setting from HIGH to LOW.
4. **[Enter Menu]+[4]: SCR**
   Scrambler (Optional Function)
   Please confirm with the supplier before use whether this function can be used.
5. **[Enter Menu]+[5]: TOT**
   Transmission time-out timer. Sets the maximum transmit time from 15 to 600 seconds (15 second steps).
6. **[Enter Menu]+[6]: APO**
   Auto Power Off powers off the radio after a predetermined time with no receiver activity. (30 > 300 minutes)
7. **[Enter Menu]+[7]: WN**
   WIDE or NARROW band width settings (12.5/25khz).
8. **[Enter Menu]+[8]: ABR**
   Unused Setting.
9. **[Enter Menu]+[9]: BEEP**
   Turns key beeps OFF or ON.
10. **[Enter Menu]+[1]+[0]: R-DCS**
    DCS receive/squelch settings. Options include the D023N-D754N positive sequence and the D023I-D754I reversed sequence.
11. **[Enter Menu]+[1]+[1]: R-CTCS**
    CTCSS receive/squelch settings. Selectable from 67.0HZ-254.1HZ. you can use the keypad to quickly enter in the desired setting.
12. **[Enter Menu]+[1]+[2]: T-DCS**
    DCS transmit settings. Options include the D023N-D754N positive sequence and the D023I- D754I reversed sequence.
13. **[Enter Menu]+[1]+[3]: T-CTCS**
    CTCSS transmit settings. Selectable from 67.0Hz-254.1Hz. you can use the keypad to quickly enter in the desired setting.
14. **[Enter Menu]+[1]+[4]: DTMFST**
    DTMF transmit tone settings.
    - **OFF** : No tones heard through the speaker when transmitting.
    - **KEY** : Only manually keyed DTMF codes are heard.
    - **ANI** : Only automatically keyed DTMF codes are heard.
    - **BOTH** : All DTMF codes are heard.
15. **[Enter Menu]+[1]+[5]: BCL**
    Busy channel lock-out. If you have this turned on the transmitter will not transmit if a channel is receiving at the time.
16. **[Enter Menu]+[1]+[6]: SC-ADD**
    Scan settings.
    - **OFF:** This removes the channel from the scan list.
    - **ON:** This adds the channel to scanning list.
17. **[Enter Menu]+[1]+[7]: SC-REV**
    Scanning settings.
    - **TO** : Time out scan, after the stopping on an active signal, scanning will resume after a few seconds.
    - **CO** : Scanning will stop on a carrier channel and will resume after the carrier channel stops receiving.
    - **SE** : Scanning will stop once an active carrier channel is found.

18. **[Enter Menu]+[1]+[8]: OPTSIG**
Turn on the optional signaling. OFF the channel or mode will not use optional signaling.
- **DTMF** : DTMF signaling required.
- **2TONE** : 2 tone signaling required.
- **5TONE** : 5 tone signaling required.

(PC programming is required to specify the DTMF, 2Tone, and 5Tone settings.)

19. **[Enter Menu]+[1]+[9]: SPMUTE**
Squelch settings when combining standard and optional tones.
- **QT** : The squelch will open for just a CTCSS or DCS Receive tone.
- **AND** : This requires both the optional tone settings (Menu 20) and CTCSS/DCS settings to be received.
- **OR** : If a either the DCS/CTCSS or optional signaling is received the squelch will open.

20. **[Enter Menu]+[2]+[0]: PTT-ID**
PTT-ID transmit setting.
- **OFF** : no ID code sent when transmitting.
- **BOT** : send ID code at Beginning of Transmit.
- **EOT** : send ID code at End of Transmit.
- **BOTH** : send ID code at both beginning and end of transmit.

(PTTID code information can only be set by the PC software)

21. **[Enter Menu]+[2]+[1]: PTT-LT**
PTT-ID transmit delay setting. (Delay Time range is 0-30 seconds.). This is the delay time before transmitting the PTTID.

22. **[Enter Menu]+[2]+[2]: S-INFO**
Signal information and automatic dialing memory. 1-15 group signal code/decode memory. The memory list is programmed through software.

23. **[Enter Menu]+[2]+[3]: EMC-TP**
Alarm mode settings.
- **ALARM** : turns on the alarm sound on the device itself.
- **ANI** : Sends the Alarm and PTT ID through the Transmitter.
- **BOTH** : combines both of the options above.
- **OFF** : Disables alarm.

24. **[Enter Menu]+[2]+[4]: EMC-CH**
Alarm channel setting. This is the channel that the alarm will transmit the PTTID and Alarm sound on.

25. **[Enter Menu]+[2]+[5]: SIG-BP**
Pager Ring at Reception of Matching 2Tone/5Tone/DTMF. (on/off)

26. **[Enter Menu]+[2]+[6]: CHNAME**
Channel name edit.

27. **[Enter Menu]+[2]+[7]: CA-MDF**
Display Mode (Display A)
- **FREQ** : displays Frequency.
- **CH** : displays channel number.
- **NAME** : displays assigned channel name.

28. **[Enter Menu]+[2]+[8]: CB-MDF**
Display Mode (Display B)
- **FREQ** : displays Frequency.
- **CH** : displays channel number.
- **NAME** : displays assigned channel name.

29. **[Enter Menu]+[2]+[9]: CC-MDF**
Display Mode (Display C)
- **FREQ** : displays Frequency.
- **CH** : displays channel number.
- **NAME** : displays assigned channel name.

30. **[Enter Menu]+[3]+[0]: CD-MDF**
Display Mode (Display D)
- **FREQ** : displays Frequency.
- **CH** : displays channel number.
- **NAME** : displays assigned channel name.

31. **[Enter Menu]+[3]+[1]: LANGUA**
Language Display Mode (English or Chinese)

32. **[Enter Menu]+[3]+[2]: AUTOLK**
Keypad auto-lock setting. This activates the keypad auto-lock feature, which lock the keypad after 8 seconds of no use; pressing the # key for 2 seconds will release the auto lock.

33. **[Enter Menu]+[3]+[3]: MAINFC**
Main LCD Display Foreground, Text Color: Color options are BLACK, WHITE, RED, BLUE, GREEN, YELLOW, INDIGO, PURPLE, GRAY.

34. **[Enter Menu]+[3]+[4]: MAINBC**
Main LCD Display Background Color: Color options are BLACK, WHITE, RED, BLUE, GREEN, YELLOW, INDIGO, PURPLE, GRAY.

35. **[Enter Menu]+[3]+[5]: MENUFC**
Menu LCD Display Foreground, Text Color: Color options are BLACK, WHITE, RED, BLUE, GREEN, YELLOW, INDIGO, PURPLE, GRAY.

36. **[Enter Menu]+[3]+[6]: MENUBC**
Menu LCD Display Background Color: Color options are BLACK, WHITE, RED, BLUE, GREEN, YELLOW, INDIGO, PURPLE, GRAY.

37. **[Enter Menu]+[3]+[7]: STA-FC**
Status Bar LCD Display Foreground, Text Color: Color options are BLACK, WHITE, RED, BLUE, GREEN, YELLOW, INDIGO, PURPLE, GRAY.

38. **[Enter Menu]+[3]+[8]: STA-BC**
Status Bar LCD Display Background Color: Color options are BLACK, WHITE, RED, BLUE, GREEN, YELLOW, INDIGO, PURPLE, GRAY.

39. **[Enter Menu]+[3]+[9]: SIG-FC**
Signal Bar LCD Display Foreground, Text Color: Color options are BLACK, WHITE, RED, BLUE, GREEN, YELLOW, INDIGO, PURPLE, GRAY.

40. **[Enter Menu]+[4]+[0]: SIG-BC**
Signal Bar LCD Display Background Color: Color options are BLACK, WHITE, RED, BLUE, GREEN, YELLOW, INDIGO, PURPLE, GRAY.

41. **[Enter Menu]+[4]+[1]: RX-FC**
Receive Active Channel Foreground, Text Color: Color options are BLACK, WHITE, RED, BLUE, GREEN, YELLOW, INDIGO, PURPLE, GRAY.

42. **[Enter Menu]+[4]+[3]: TX-FC**
Transmit Active Channel Foreground, Text Color: Color options are BLACK, WHITE, RED, BLUE, GREEN, YELLOW, INDIGO, PURPLE, GRAY.

43. **[Enter Menu]+[4] +[3]: Transmit Display**
Status Bar Numerical Display Options (Power Level or Mic Level)

44. **[Enter Menu]+[4]+[4]: MEM-CH**
Saves the selected channel.

45. **[Enter Menu]+[4]+[5]: DEL-CH**
Deletes the selected channel.

46. **[Enter Menu]+[4]+[6]: SFT-D**
Frequency difference direction setting.
- **OFF** : no frequency difference.
- **(+)** : Transmit offset amount will be a positive offset (higher than the receive frequency).
- **(–)** : Transmit offset will be a negative offset (amount will be lower than the receive frequency).

47. **[Enter Menu]+[4]+[7]: OFFSET**
Difference between the transmit and receive frequency.

48. **[Enter Menu]+[4]+[8]: ANI**
Displays the radio ID code. Code only can set by PC software.

49. **[Enter Menu]+[4]+[9]: ANI-L**
ID code length. Length = 3, 4, 5.

50. **[Enter Menu]+[5]+[0]: REP-S**
Tone burst repeater settings. Pressing CALL will send a predetermined tone. Options are 1000 Hz, 1450 Hz, 1750 Hz, 2100 Hz.

51. **[Enter Menu]+[5]+[1]: REP-M**
Repeater forwarding mode setting. Used in conjunction with two radios connected as a repeater.
- **OFF** : turned off.
- **CARRI** : forwards after it receives a carrier call.
- **CTDCS** : forwards after it receives correct CT/DCS tone.
- **TONE** : forwards after it receives the correct 2Tone or 5Tone.
- **DTMF** : forwards after it receives the assigned DTMF code.

52. **[Enter Menu]+[5]+[2]: TMR-MR**
Transmit Delay Return time. Delay time before returning to the primary channel after the secondary signal is clear. (PTT Return Time)

53. **[Enter Menu]+[5]+[3]: STE**
Squelch Tail Elimination at the end of a received signal. Requires both transmitting radios to have the option ON.

54. **[Enter Menu]+[5]+[4]: RP-STE**
Repeater Squelch Tail Elimination requires a repeater with this function ON. (Reverses the CT/DCS settings at the end of a transmission to quickly turn of the squelch)

55. [Enter Menu]+[5]+[5]: RPT-DL

Repeater Squelch Tail Eliminator Delay time. (use with Menu 46)

56. [Enter Menu]+[5]+[6]: DTMF-G

Adjust the gain of the DTMF tones. Selectable from 0-60. 0 being the quietest level and 60 being the loudest modulated DTMF tones.

57. [Enter Menu]+[5]+[7]: RESET

Reset all VFO settings or ALL settings. (channels deleted and VFO settings cleared)

■ Menu definitions

0	TMR	Transmit Multi Receive	M+A	This mode selects what displays are monitored in the background besides the primary selected channel. You can mix and match between all or partial channels to allow dual, tri, and quad watch. Selected Memory + Displays (A,B,C,D) M = Selected Memory A = Display A B = Display B C = Display C D = Display D
			M+B	
			M+C	
			M+D	
			M+A+B	
			M+A+C	
			M+A+D	
			M+B+C	
			M+B+D	
			M+C+D	
			M+A+B+C	
			M+A+B+D	
			M+A+C+D	
			M+B+C+D	
			A+B+C+D	
1	STEP	Frequency Step Size Setup	2.5 to 25kHz	2.5, 5, 6.25, 10, 12.5, 25kHz
2	SQL	Squelch Level	00 > 09	10 squelch levels
				00 = minimum / normally open
3	TXP	Transmit Power	High	Full Power
			Low	Reduced Power

4	SCR	Scrambler	ON	Scrambler Function Enabled
			OFF	Scrambler Function Disabled
5	TOT	TX Time Out Timer	15 > 600 secs	15 second steps
6	APO	Auto Power Off	30, 60 > 300 minutes	Time Set that radio will Power Off after last signal received.
			OFF	Turn off APO Option
7	WN	Bandwidth	Wideband	25.0 kHz
			Narrowband	12.5 kHz
8	ABR	Unused Setting		
9	BEEP	Keypad Voice Prompt	ON / OFF	Turn ON / OFF keypad voice prompt
10	R-DCS	Receive - Digital Coded Squelch	D023N > D754I	Squelch opens when proper DCS code is detected
			OFF	No DCS code required
11	R-CTCS	Receive - Analog Tone Squelch	67.0 > 254.1Hz	Squelch opens when proper CTCSS tone detected
			OFF	No CTCSS tone required
12	T-DCS	Transmit - DCS Code	D023N > D754I	Transmits specified code
			OFF	No DCS code transmitted
13	T-CTCS	Transmit - CTCSS Code	67.0 > 254.1 Hz	Transmits specified tone
			OFF	No CTCSS tone transmitted
14	DTMFST	Determines when DTMF codes are heard through speaker	OFF	No DTMF tone heard
			DS-ST	Only manually keyed DTMF codes are heard
			ANI-ST	Only automatically keyed DTMF codes are heard
			DT-ANI	All DTMF codes are heard

15	BCL	Busy Channel Lockout	ON	Prevents transmit if active signal on the channel
			OFF	No lockout
16	SC-ADD	Add Scan Channel	ON	Add channel to scan list
			OFF	Remove channel from scan list
17	SC-REV	Scan Resume Method	TO	(Time Operation) Scan stops when signal detected. The scan resumes after approximately 5 seconds (even if the channel is still active).
			CO	(Carrier Operation) Scan stops when signal detected. Scan resumes when signal disappears.
			SE	(Search Operation) Scan stops when signal detected. Scanning will not resume.
18	OPTSIG	Optional Signaling	OFF	No optional signaling
			DTMF	DTMF signaling selected
			2TONE	2TONE signaling selected
			5TONE	5TONE signaling selected
19	SPMUTE	Speaker Mute Settings	QT	Squelch opens for CTCSS/DCS tones only.
			AND	Squelch opens when CTCSS/DCS tone is recognized along with the optional signaling.
			OR	Squelch opens when either the CTCSS/DCS tone OR the optional signaling is recognized.

20	PTT-ID	PTT ID - When to send	OFF	Do not send
			BOT	Send at Beginning of Transmission
			EOT	Send at the End of Transmission
			BOTH	Send at both Beginning and End
21	PTT-LT	PTT ID - Transmit Delay	0 > 30	Set Delay Time before transmitting PTT-ID
22	S-INFO	Auto Group Dialing	Group Signal Code Memory	1 > 15 (Can only be set with software)
23	EMC-TP	Alarm Mode	ALARM	Turn on Alarm sound
			ANI	Send Alarm code and ID code
			BOTH	Both of the above
			OFF	Alarm Mode Completely Disabled
24	EMC-CH	Alarm Channel	000 > 199	Specified Alarm Channel
25	SIG-BP	Signal Beep	ON	Pager Ring at Reception of Matching 2Tone/5Tone/ DTMF
			OFF	Tone OFF
26	CHNAME	Channel Name Edit		In Channel Mode, edit the Current Name
27	CA-MDF	Channel A Display Mode	FREQ	In Channel Mode, display the selected format in display A
			CH	
			NAME	
28	CB-MDF	Channel B Display Mode	FREQ	In Channel Mode, display the selected format in display B
			CH	
			NAME	

29	CC-MDF	Channel C Display Mode	FREQ	In Channel Mode, display the selected format in display C
			CH	
			NAME	
30	CD-MDF	Channel D Display Mode	FREQ	In Channel Mode, display the selected format in display D
			CH	
			NAME	
31	LANGUA	Language	English	Screen Prompts Display
			Chinese	
32	AUTOLK	Auto Keypad Lock	ON	Keypad Auto Lock Enabled
			OFF	Keypad Auto Lock Disabled
33	MAINFC	MAIN LCD Display Foreground Color (Text)	Select Color	BLACK, WHITE, RED, BLUE, GREEN, YELLOW, INDIGO, PURPLE, GRAY
34	MAINBC	MAIN LCD Display Background Color	Select Color	BLACK, WHITE, RED, BLUE, GREEN, YELLOW, INDIGO, PURPLE, GRAY
35	MENUFC	On Screen Menu Foreground Color (Text)	Select Color	BLACK, WHITE, RED, BLUE, GREEN, YELLOW, INDIGO, PURPLE, GRAY
36	MENUBC	On Screen Menu Background Color	Select Color	BLACK, WHITE, RED, BLUE, GREEN, YELLOW, INDIGO, PURPLE, GRAY
37	STA-FC	Status (Top) Bar Display Foreground Color (Text)	Select Color	BLACK, WHITE, RED, BLUE, GREEN, YELLOW, INDIGO, PURPLE, GRAY
38	STA-BC	Status (Top) Bar Display Background Color	Select Color	BLACK, WHITE, RED, BLUE, GREEN, YELLOW, INDIGO, PURPLE, GRAY
39	SIG-FC	Bottom Bar Display Foreground Color (Text)	Select Color	BLACK, WHITE, RED, BLUE, GREEN, YELLOW, INDIGO, PURPLE, GRAY

40	SIG-BC	Bottom Bar Display Background Color	Select Color	BLACK, WHITE, RED, BLUE, GREEN, YELLOW, INDIGO, PURPLE, GRAY
41	RX-FC	Main LCD Receiving Color Foreground Color (Text)	Select Color	BLACK, WHITE, RED, BLUE, GREEN, YELLOW, INDIGO, PURPLE, GRAY
42	TX-FC	Main LCD TX Color Foreground Color (Text)	Select Color	BLACK, WHITE, RED, BLUE, GREEN, YELLOW, INDIGO, PURPLE, GRAY
43	TXDISP	Transmit Display	POWER	Display Power Level on Bottom Graph
			MIC-V	Display Mic Audio Level on Bottom Graph
44	MEM-CH	Memorize Channel	000 > 199	Indicates channel number to be stored.
45	DEL-CH	Delete Channel	000 > 199	Indicates channel number to be deleted.
46	SFT-D	Frequency Shift Direction	OFF	No Offset (simplex)
			+	Plus frequency shift
			-	Minus frequency shift
47	OFFSET	Frequency Shift Offset Amount	00.00 > 69.99	Frequency shift in MHz
48	ANI	ANI ID Code		Can only be set with software
49	ANI-L	ANI Length	3, 4, 5	Length of ANI ID code
50	REP-S	Repeater Activation Tone	1000Hz, 1450Hz, 1750Hz, 2100Hz	Audible tone for repeater activation
51	REP-M	Repeater Forwarding Mode	OFF	Function OFF
			CARRI	Forward after receiving Carrier
			CTDCS	Forward after receiving correct CTDCS
			TONE	Forward after receiving correct mono audio (Menu 42)
			DTMF	Forward after receiving assigned DTMF code (ANI)

52	TMR-MR	TMR - Return Time Delay to Primary Channel; Sets the PTT to the last received transmission channel. Time delay selectable	OFF	Function OFF - Transmits always on Primary Channel
			1 > 50 seconds	This is the delay time before returning to the primary channel after secondary signal is clear.
53	STE	Squelch Tail Elimination, Requires both radios have function ON.	OFF	Function OFF
			ON	Eliminates squelch tail at end of transmission.
54	RP-STE	Repeater Squelch Tail Elimination, Requires a repeater using this function.	OFF	Function OFF
			1 > 10	Delay Time
55	RPT-DL	Repeater squelch tail delay.	OFF	Function OFF
			1 > 10	Delay Time
56	DTMF-G	DTMF Gain/Audio Level	0 > 60	0 = Lowest Audio Gain; 60 = Highest Gain
57	PONKEY	Turn on radio by connect power supply	OFF	After energizing, maintain the original boot state
			ON	After energizing, you must press the power button to power on
58	RESET	Initialize to Factory Defaults	VFO	Menu Initialization
			ALL	Menu and Channel Initialization

Frequency Mode vs. Channel Mode

Switch between Modes by Using the V/M Front Panel Button. These two modes have different functions and are often confused.

Frequency Mode (VFO)

Used for a temporary frequency assignment, such as a test frequency or quick field programming if permitted.

Channel Mode (MR)

Used for selecting preprogrammed channels.

⚠ ***All programming must be initially done in the frequency mode (VFO) only. From there you have the option of assigning the entered data to a specific channel for access in the channel mode.***

⚠ ***Call tones, TX/RX tones, squelch, and power settings are adjustable on saved channels in channel mode.***

⚠ ***Programming channels are different from the VFO settings; the offset settings are not stored, instead you enter a TX frequency directly (e.g. 145.000 RX with an offset of (+). 600 Would be a TX frequency of 145.600).***

Toggle from High to Low Power

A quick press of the Microphone **[#/LOCK]** will alternate power levels from High power to Low power.

Storing an FM Radio Station and Scanning

Use PC software to store FM radio channels names, you can name the FM channel and instead of display the frequency your FM station will display the name. (software FM option (FM channels are not stored, only the channel names are)) Press the microphone **[*/SCAN]** Key to scan the FM radio.

Keypad Lock-out

Hold the microphone **[#/LOCK]** for 2 seconds at standby to turn on/off the keypad lock-out function. (The Lock icon appears, when the radio is locked out)

PTT ID Setting

1. Use PC software to change PTT-ID code.
2. Set the Menu 18 settings on the radio to select the PTTID signal mode (2Tone, 5Tone, or DTMF).
3. Set the Menu 20 settings to select when the PTTID is transmitted.
4. Set the Menu 21 settings to program the PTTID transmit delay time.
5. When all the settings are set, when you transmit (Press the PTT) The radio will transmit the PTTID.

DTMF RX Settings

This radio has DTMF coding and decoding. Use the PC software to set the DTMF signal settings first.

DTMF TX Settings

In two-way radio systems, DTMF is most commonly used for automation systems and remote

control. A common example would be in amateur radio repeaters where some repeaters are activated by sending out a DTMF sequence (usually a simple single-digit sequence).

DTMF frequencies and corresponding codes

	1209Hz	1336Hz	1477Hz	1633Hz
697Hz	1	2	3	A - **[MENU]**
770Hz	4	5	6	B - **[UP▲]**
852Hz	7	8	9	C - **[DOWN▼]**
941Hz	*	0	#	D - **[EXIT/AB]**

The product has a full implementation of DTMF, including the A, B, C and D codes. The numerical keys, as well as the **[✱/SCAN]** and **[#/LOCK]**, keys correspond to the matching DTMF codes as you would expect. The A, B, C and D codes are located in the **[MENU]**, **[UP▲]**, **[DOWN▼]** and **[EXIT/AB]** keys respectively (+).

Manually TX DTMF Tones: To manually send DTMF codes, press the key(s) while holding down the PTT key.

Automatically TX DTMF Tones: Save it to Memory and Transmit: You can also program a DTMF tone to the saved calling list (requires the PC software) to the one of the 15 Memory call banks in the radio. To transmit select the Pre-set DTMF saved setting on Menu 22 and then press the call key to send the saved DTMF TX tone.

■ Remote Stun

First set the DTMF Remote Stun Tone and Master Control ID in Software: When your radio receives the DTMF Remote Stun Tone Sequence (Set by software) (Requires Menu 18 and 19 to accept DTMF signaling) it will command the radio to disable transmitting abilities. The Master ID station must first identify and send the PTTID (set in software as "Master ID") – once the Master Station identifies itself, the radio is set to receive command tones, if the Monitor Remote Stun tone is received - the radio will no longer be able to transmit. Both the master ID station and remote stun signal must be set up in software.

■ Remote Kill

First set the DTMF Remote Kill Tone and Master Control ID in Software: When your radio receives the DTMF Remote Kill Tone Sequence (Set by software) (Requires Menu 18 and 19 to accept DTMF signaling) it will command the radio to disable transmitting and receiving. The Master ID station must first identify and send the PTTID (set in software as "Master ID") – once the Master Station identifies itself, the radio is set to receive command tones, if the Monitor Remote Kill tone is received - the radio will no longer be able to transmit or receive. Both the master ID station and remote stun signal must be set up in software.

■ Remote Revive

First set the DTMF Remote Revive Tone and Master Control ID in Software: When your radio receives the DTMF Remote Revive Tone Sequence (Set by software) (Requires Menu 18 and 19 to accept DTMF signaling) it will reactivate the radio after it has been remotely stunned or killed. The Master ID station must first identify and send the PTTID (set in software as "Master ID") – once the Master Station identifies itself, the radio is set to receive command tones, if the Monitor Remote Kill tone is received - the radio will revived from a stun/kill command. Both the master ID station and remote stun signal must be set up in software.

■ DTMF Receive Settings, Transmit Setting (Call Key)

1. Press **[MENU]** Key select 18 OPTSIG, press **[MENU]** Key select DTMF function.
2. Press **[MENU]** Key select 22 S-INFO, press **[MENU]** Key select pre-code signal group (1-15). (The DTMF Signal must be saved first in the PC software setting under DTMF settings.
3. If properly set up (on Menu 18 and 19), your radio will open the squelch when it receives the required DTMG signal.
4. Press **[CALL]** Key to send the same DTMF you have selected in Menu 22.

■ 2TONE Receive Settings, Transmit Setting (Call Key)

1. Press **[MENU]** Key select 18 OPTSIG, press **[MENU]** Key select 2TONE function.
2. Press **[MENU]** Key select 22 S-INFO, press **[MENU]** Key select pre-code signal group (1-15). (The 2Tone Signal must be saved first in the PC software setting under 2TONE settings)
3. If properly set up (on Menu 18 and 19), your radio will open the squelch when it receives the

required 2TONE signal.

4. Press **[CALL]** Key to send the same 2TONE you have selected in Menu 22.

■ 5Tone Receive Settings, Transmit Setting (Call Key)

1. Press **[MENU]** Key select 18 OPTSIG, press **[MENU]** Key select 5TONE function.
2. Press **[MENU]** Key select 22 S-INFO, press **[MENU]** Key select pre-code signal group (1-15). (The 5Tone Signal must be saved first in the PC software setting under 5TONE settings)
3. If properly set up (on Menu 18, and 19), your radio will open the squelch when it receives the required 5TONE signal.
4. Press **[CALL]** Key to send the same 5TONE you have selected in Menu 22.

■ Scanning modes

The scanner is configurable to one of three ways of operation: Time, carrier or search, each of w hich is explained in further details in their respective section below.

Setting scanner mode

1. Press the **[MENU]** key to enter the menu.
2. Enter "17" on your numeric keypad to come to scanner mode.
3. Press the **[MENU]** key to select.
4. Use the **[UP▲]** and **[DOWN▼]** keys to select scanning mode.
5. Press the **[MENU]** key to confirm and save.
6. Press the **[EXIT/AB]** key to exit the menu.

Time operation:

In Time Operation (TO) mode, the scanner stops when it detects a signal, and after a factory pre-set time out, it resumes scanning.

Carrier operation:

In Carrier Operation (CO) mode, the scanner stops when it detects a signal, and after a factory preset time with no signal it resumes scanning.

Search operation:

In Search Operation (SE) mode, the scanner stops when it detects a signal. To resume scanning you must press and hold the key again.

Technical Specifications

GENERAL	
Specification	**Value**
Frequency Range (MHz)	Rx:136-174 /220-260/350-390/400-480 MHz & 88.1-108MHz Tx: 144-148/222-225/420-450MHz
Memory channels	200
Frequency stability	±2.5ppm
Frequency step (kHz)	2.5K/5.0K/6.25K/10.0K/12.5K/25.0K
Squelch Setup	CARRIER / CTCSS / DCS / 5Tone / 2TONE / DTMF
Antenna impedance	50 Ohm
Operating temperature	-20°C to +60°C
Supply voltage	13.8V DC±15%:
Dimension	98(W) x 43(H) x 126(D) mm / 103(W) x 47(H) x 126(D) mm
Weight	448g
Operating Temperature	-5°F - +140°F

RECEIVER		
	Broadband	**Narrow band**
Sensitivity	≤0.25μV	≤0.35μV
Channel choice	≥70dB	≥60dB
Intermodulation	≥65dB	≥60dB
Spurious Rejection	≥70dB	≥70dB
Audio response	+1~-3dB (0.3-3KHz)	+1~-3dB (0.3~2.55KHz)
Signal to noise ratio	≥45dB	≥40dB
Audio Distortion	≤5%	
Audio output power	≥2W±10%	

TRANSMIT		
	Broadband	**Narrow band**
Output power	25W / 20W (VHF / UHF)	
Modulation Mode	16KΦF3E	11KΦF3E
Channel Power	≥70dB	≥60B
Signal to noise ratio	≥40dB	≥36dB
Parasitic harmonic	≥60dB	≥60dB
Audio response	+1--3dB (0.3-3KHz)	+1--3dB (0.3-2.55KHz)
Audio distortion	≤5%	

■FCC Compliance Statements:

This device complies with part 15 of the FCC Rules.
Operation is subject to the following two conditions:
(1) This device may not cause harmful interference, and
(2) this device must accept any interference received, including interference that may cause undesired operation.

Note: This equipment has been tested and found to comply with the limits for a Class B digital device, pursuant to part 15 of the FCC Rules. These limits are designed to provide reasonable protection against harmful interference in a residential installation. This equipment generates, uses and can radiate radio frequency energy and, if not installed and used in accordance with the instructions, may cause harmful interference to radio communications. However, there is no guarantee that interference will not occur in a particular installation. If this equipment does cause harmful interference to radio or television reception, which can be determined by turning the equipment off and on, the user is encouraged to try to correct the interference by one or more of the following measures:

- Reorient or relocate the receiving antenna.
- Increase the separation between the equipment and receiver.
- Connect the equipment into an outlet on a circuit different from that to which the receiver is connected.
- Consult the dealer or an experienced radio/TV technician for help.

WARNING: MODIFICATION OF THIS DEVICE TO RECEIVE CELLULAR RADIOTELEPHONE SERVICE SIGNALS IS PROHIBITED UNDER FCC RULES AND FEDERAL LAW.

■**Licensing Information**

Use our radio in USA is subject to the rules & regulations of FCC. Changes or modifications not expressly approved by our may void the user authority granted by the FCC to operate this radio and should not be made. To comply with FCC requirements, transmitter adjustments should be made only by or under the supervision of a person certified as technically qualified to perform transmitter maintenance and repairs in the private land mobile and fixed services as certified by an organization representative of the user of those services. Replacement of any transmitter component (crystal, semiconductor, etc) not authorized by the FCC equipment authorization for this radio could violate FCC rules.

Note: Use of this radio outside the country where it was intended to be distributed is subject to government regulations and may be prohibited.

Important: Any changes or modifications not expressly approved by the party responsible for compliance could void the user's authority to operate this device. Your radio is set up to transmit a regulated signal on an assigned frequency. It is against the law to alter or adjust the settings inside the radio to exceed those limitations. Any adjustments to your radio must be made by qualified technicians.

Mini color screen

Mobile Radio