Boost Charger™

DC Fast Charging Station

Site Preparation Guide

Version 1.0

FREEWIRE

Copyright and trademarks

©2014-2020 FreeWire Technologies, Inc. All rights reserved. This material is protected by the copyright laws of the United States and other countries. It may not be modified, reproduced or distributed without the prior, express written consent of FreeWire Technologies, Inc. FREEWIRE, FREEWIRE TECHNOLOGIES, AMP and BOOST CHARGER are U.S. registered trademarks and service marks of FreeWire Technologies, Inc. and cannot be used without the prior written consent of FreeWire®. No part of this document may be photocopied, reproduced or translated to other language without the express written consent of FreeWire®.

No accuracy guarantee

FreeWire® has taken commercially reasonable efforts to ensure the accuracy, reliability and completeness of the specifications and other information in this manual at the time of its publication. However, the information is provided "as is" without warranty of any kind, and the specifications and other information in this manual do not constitute a contractual obligation and are subject to change at any time without prior notice. FreeWire does not accept any responsibility or liability regarding the accuracy, content, completeness, legality or reliability of the information contained herein.

Product disclaimer

The Boost Charger™ is designed for specific applications and should not be used for any purpose not expressly set forth in applicable FreeWire product documentation.

Warranty information and disclaimer

The Limited Warranty you received with your Boost Charger™ is subject to certain exceptions and exclusions. For example, your use of, or modification to, the FreeWire® Boost Charger™ in a manner in which it is not intended to be used or modified will void the limited warranty. You should review your warranty and become familiar with the terms thereof. Other than any such limited warranty, the FreeWire® products are provided "AS IS," and FreeWire Technologies, Inc. and its distributors expressly disclaim all implied warranties, including any warranty of design, merchantability, fitness for a particular purposes and non- infringement, to the maximum extent permitted by law.

Limitation of liability

IN NO EVENT SHALL FREEWIRE BE LIABLE FOR ANY DIRECT, INDIRECT, PUNITIVE, INCIDENTAL, SPECIAL CONSEQUENTIAL DAMAGES, TO PROPERTY OR LIFE, WHATSOEVER, INCLUDING BUT NOT LIMITED TO LOST PROFITS, LOST BUSINESS, LOST DATA, LOSS OF USE OR COST OF COVER INCURRED ARISING OUT OF OR CONNECTED WITH THE USE, MISUSE OR INABILITY TO USE THE BOOST CHARGER, UNDER ANY THEORY OF LIABILITY, WHETHER IN AN ACTION IN CONTRACT, STRICT LIABILITY, TORT (INCLUDING NEGLIGENCE) OR OTHER LEGAL OR EQUITABLE THEORY, EVEN IF FREEWIRE KNEW OR SHOULD HAVE KNOWN OF THE POSSIBILITY OF SUCH DAMAGES. IN ANY EVENT, THE CUMULATIVE LIABILITY OF FREEWIRE FOR ALL CLAIMS WHATSOEVER RELATED TO THE BOOST CHARGER SHALL NOT EXCEED THE PRICE YOU PAID FOR THE BOOST CHARGER. THE LIMITATIONS SET FORTH HEREIN ARE INTENDED TO LIMIT THE LIABILITY OF FREEWIRE AND SHALL APPLY NOTWITHSTANDING ANY FAILURE OF ESSENTIAL PURPOSE OF ANY LIMITED REMEDY.

Safety and compliance

The FreeWire Boost Charger is for Outdoor Use Only and to be mounted on a non-combustible surface such as a concrete pad that extends a minimum of 3 feet beyond the perimeter of the battery system/Boost Charger.

The Boost Charger should comply with all local and national codes and standards and only be installed by a licensed contractor and a licensed electrician.

It is the site owner's responsibility to comply with all local codes and safety laws. The most common installation method is discussed in this guide. If for any reason it is not possible to perform the installation following the guide, contact FreeWire Technologies, Inc. FreeWire Technologies, Inc. is not responsible for any damages that may occur resulting from deviations from the instructions outlined in this guide.

Lithium-Ion Battery

FreeWire Battery Pack 820-00114-01 is to be used exclusively with the Boost Charger.

FCC Compliance Statement

This equipment has been tested and found to comply with the limits for a Class A digital device pursuant to Part 15 of the FCC Rules. These limits are designed to provide reasonable protection against harmful interference when the equipment is operated in a commercial environment. This equipment generates, uses, and can radiate radio frequency energy and, if not installed and used in accordance with the manufacturer's instruction manual, may cause harmful interference with radio communications. Operation of this equipment in a residential area is likely to cause harmful interference, in which case, you will be required to correct the interference at your own expense.

Important: Changes or modifications to this product not authorized by FreeWire Technologies, Inc., could affect the EMC compliance and revoke your authority to operate this product.

Exposure to Radio Frequency Energy: The radiated power output of the 802.11 b/g/n radio and cellular modem in this device is below the FCC radio frequency exposure limits for uncontrolled equipment. The antenna of this product, used under normal conditions, is at least 20 cm away from the body of the user. This device must not be co-located or operated with any other antenna or transmitter by the manufacturer, subject to the conditions of the FCC Grant.

This page is left intentionally blank

Boost Charger

DC Fast Charging Station

Site Preparation Guide

Version 1.0

Table of Contents

GENERAL WARNINGS **6**

1 INTRODUCTION **7**

Boost Charger Overview *7*

Before You Start *8*

Grounding Requirements *8*

Surge Protection *8*

Lightning Protection *9*

ADA Considerations *9*

Tools and Materials *9*

Concrete Mounting Template *10*

2 PREPARING THE MOUNTING PAD **11**

Overview of Steps *11*

Run the Conduit and Cable *11*

Assemble the Mounting Template *12*

Mounting Specifications *14*

Vehicle Impact Protection *15*

AC Conduit *15*

Install the Concrete Mounting Template *16*

3 BOOST CHARGER SPECIFICATIONS **17**

Symbols used in this site preparation guide

WARNING: This indicates a fact or feature very important for the safety of the user to prevent injury or death and/or which can cause serious hardware damage if not applied appropriately.

CAUTION: Identifies information to prevent damage to this product.

GROUND: Earth ground symbol.

General Warnings

SHOCK RISK: HIGH VOLTAGE ELECTRICITY.

WARNING: To reduce the risk of injury, read all instructions and caution markings before installing the FreeWire Boost Charger.

WARNING: The FreeWire Boost Charger must be installed by licensed technicians and in accordance with all instructions.

WARNING: Installation must be done in accordance with all local electrical codes and/or the National Electrical Code® (NEC®).

WARNING: Protection against lightning surges in accordance with local electric codes are the responsibility of the installer.

WARNING: To reduce the risk of injury, be sure to follow lockout/tagout practices and procedures to safeguard workers from unexpected energization.

1 Introduction

This guide describes how to prepare your installation site for the FreeWire® Boost Charger™ DC fast charger. Read this document first to become familiar with the details and ensure that you have all the necessary tools and materials to prepare the Boost Charger Concrete Mounting Pad.

Important: Always check local codes or consult an engineer to ensure that the site is prepared in compliance with all applicable codes.

To ensure the successful installation of the Boost Charger DC fast charging station, please be sure to read this overview and become familiar with Boost Charger and the necessary tools and equipment to install it.

Note: The FreeWire Boost Charger must be installed and serviced by a licensed installer.

Boost Charger Overview

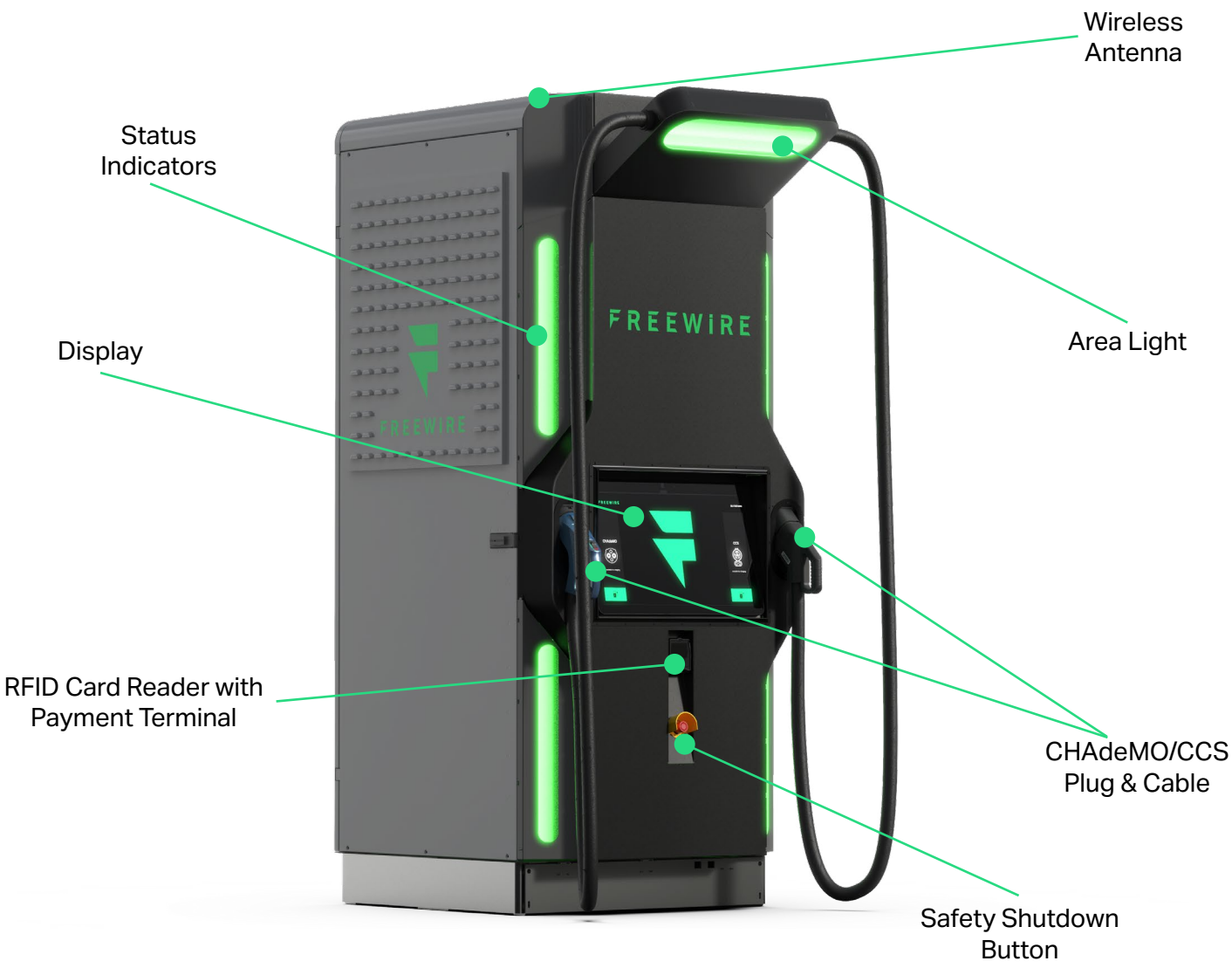

Before You Start

Check the cellular strength at the installation site before beginning. The Boost Charger communicates using a cellular network. FreeWire recommends that the signal is -110 dBm or better. Install repeaters if the signal is too low or if the signal is intermittent.

You can measure signal strength using a signal meter device, or by initiating a strength test using a field test mode on your smartphone. Instructions for this differ by smartphone, carrier, and operating system. As of July 2020, a set of instructions can be found at: https://support.weboost.com/hc/en-us/articles/206521937-Finding-Your-Phone-s-Signal-Strength-Reading-Field-Test-Mode-

Verify that the installation site has service wiring that meets the Boost Charger's power requirements. Please reference section 3.

Make sure that the grounding conductor is installed properly and complies with local codes.

Important: In geographic areas that experience frequent thunder storms, a supplemental surge protection breaker must be installed at the service panel.

Consult NEC Article 625 Electric Vehicle Charging and Supply Equipment Systems regarding the installation of a disconnect switch.

Grounding Requirements

The FreeWire Boost Charger must be grounded. Use a grounded, metal, permanent wiring system that runs with circuit conductors and connects to the charger equipment ground on the Boost Charger. An earth ground that complies to local codes must also be used for the Boost Charger.

Earth Ground

Check with local codes and regulations to determine if an earth ground is required at the physical location of the concrete installation pad. If not, the earth ground from the electrical switch gear can be used to ground the Boost Charger.

Surge Protection

Please refer to NEC Article 625 for installation requirements and review the installed jurisdiction for any other electrical requirements or codes. Input over current protection needs to be provided by the installer. In addition, it is recommended to install a UL1449 Type 1 Surge protection device (SPD) for use with the Boost Charger, especially in areas that experience frequent thunderstorms. The specifications for the exact SPD must be determined by a licensed electrical engineer or contractor and will depend on local laws, safety and electrical regulations.

Lightning Protection

In geographic areas that experience frequent thunderstorms, it is recommended to install one electrode (ground rod) near the Boost Charger foundation. This is dependent on the local regulations and should be determined by the contractor. It may be necessary to consult a local specialist for the options of lightning protection. The Boost Charger must be within the protection angle of the lightning distraction device, which must be determined by the owner and local specialist. The implementation of the lightning protection depends on the local laws, safety and electrical regulations.

ADA Considerations

Check with local codes and regulations to determine if the Standards for Accessible Design for Americans with Disabilities is applicable when choosing the location and placement of the Boost Charger.

"Guidance on the 2010 ADA Standards for Accessible Design, can be downloaded from: http://www.ada.gov For information about the ADA, including the revised 2010 ADA regulations, please visit the Department's website www.ADA.gov; or, for answers to specific questions, call the toll-free ADA Information Line at 800-514-0301 (Voice) or 800-514-0383 (TTY)." [1]

Tools and Materials

Before you start, you will need the following tools and materials:

- Digging tools (shovel, spade, etc.)
- Concrete framing materials
- Concrete
- Rebar
- Conduit (See section 2 for size guidance)
- 15/16" wrenches (x2)
- Pliers to make any adjustments to the template (if needed)
- Bubble or digital level
- Concrete Mounting Template (820-00255-01)
- Torque wrench (200 ft-lb)

[1] http://www.ada.gov/2010ADAstandards_index.htm

Concrete Mounting Template

The Mounting Template ships separately, prior to the Boost Charger. Please contact FreeWire to coordinate.

The site must be prepared by running conduit and building a concrete mounting pad. Use the FreeWire Technologies Boost Charger Concrete Mounting Template (820-00255-01) for the mounting pad. The mounting template will correctly align the mounting bolts and conduit to ensure that the Boost Charger can be easily positioned.

The mounting template includes the following hardware:

- 5/8-11 UNC high strength rod thread bolts (x8)
- 5/8-11 nuts* (x32)
- 5/8-11 locking nuts (x8)
- 5/8-11 washers* (x40)
- 5/8 plastic caps (x8)

*You will need only 32 of the 5/8-11 nuts and washers when assembling the Concrete Mounting Template. The remaining 8 are needed when securing the Boost Charger to the mounting pad as described in the *Boost Charger Installation Guide*.

2 Preparing the Mounting Pad

This section provides instructions on how to prepare the mounting pad.

Overview of Steps

- Run the Conduit and Cable (page 11)
- Assemble the Mounting Template (page 12)
- Install the Mounting Template (page 16)

Run the Conduit and Cable

Boost Charger service wiring must be installed underground by means of conduit in compliance with local electrical codes. When calculating the grade, type, and size of the conduit, consult local codes. The outer diameter of the conduit must not exceed 2.5 inches for the AC power and 0.9 inches for the remote shutoff. Typical trade size for the AC power conduit is 2 inches and 0.5 inches for the remote shutoff conduit. The terminals in the Boost Charger are designed to use up to 2 AWG wire. The remote safety shutoff terminals are designed to use up to 20 AWG wire. The service wiring should not be pulled until the Boost Charger is securely mounted. This will avoid damage to the wiring during installation of the Boost Charger. The conduit should extend 8.0" above the surface of the concrete.

Important: The Boost Charger power distribution panel is designed to work with 2 AWG wires. If using a larger gauge wire to accommodate a long run, reduce the wire size at the disconnect.

Important: Check that the bolts fit properly into the mounting template.

Important: Check that the conduit fits properly into the mounting template before running the conduit.

Important: The service wiring should not be pulled until the Boost Charger is securely mounted. This will avoid damage to the wiring during installation of the Boost Charger.

Assemble the Mounting Template

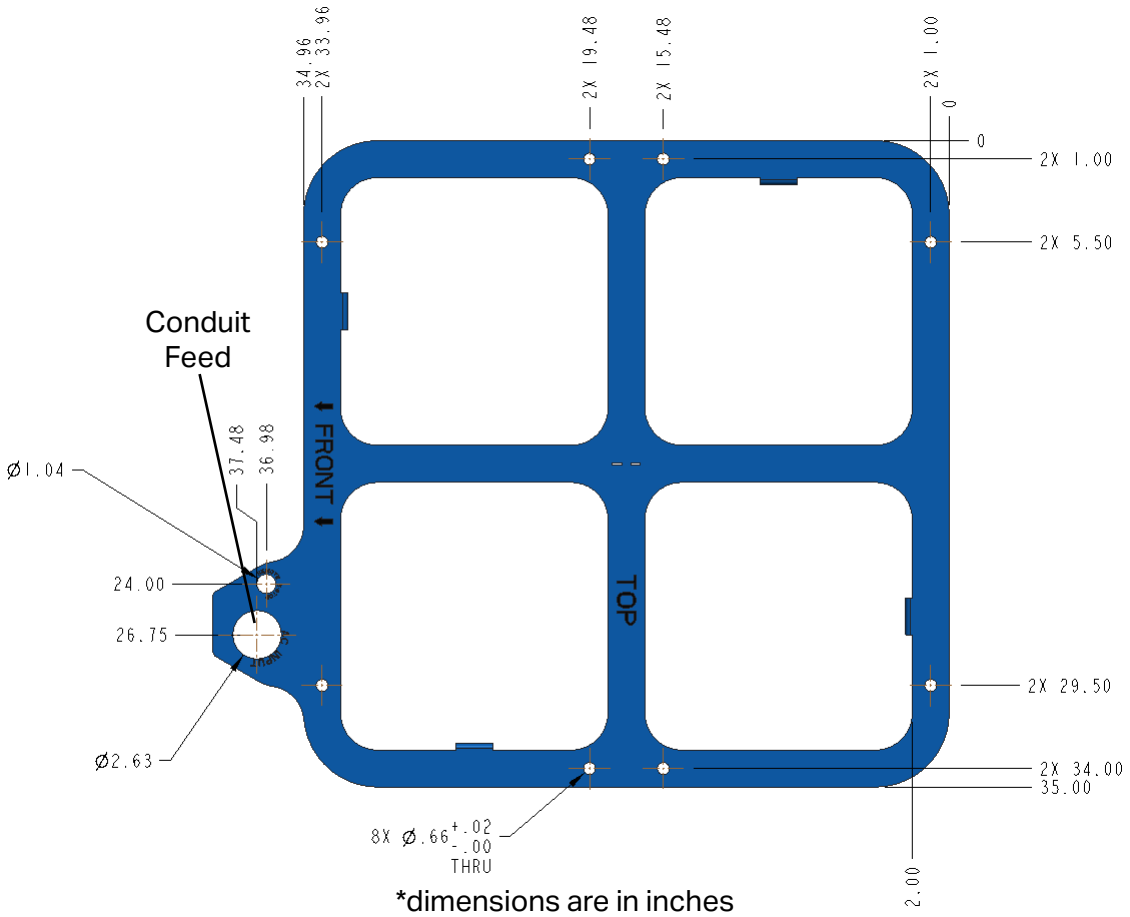

*dimensions are in inches

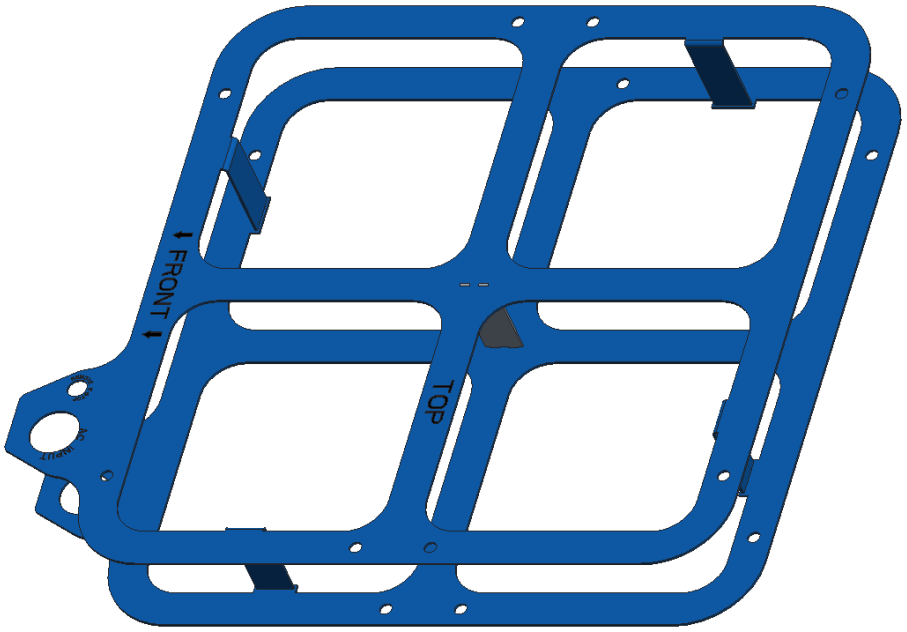

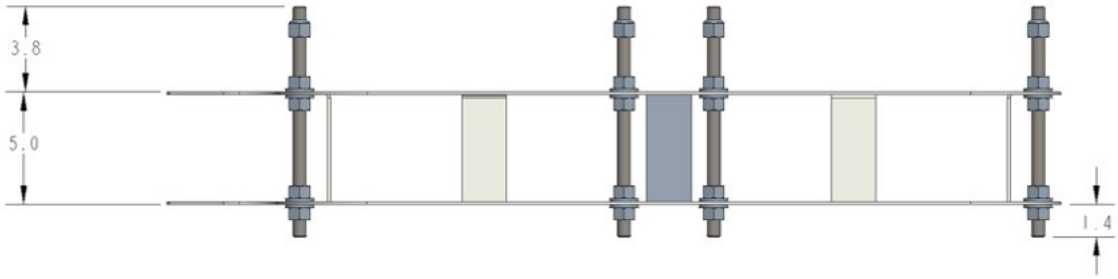

The AC conduit enters the opening from the front of the Boost Charger. Follow the steps below to assemble the mounting template:

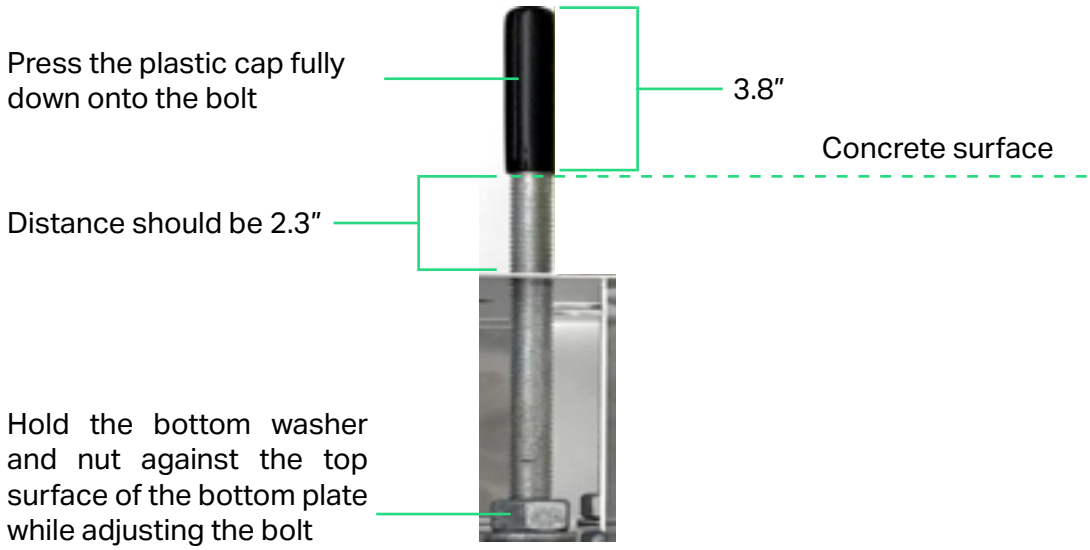

Step 1 Insert one bolt into one of the bolt holes of the top plate of the template.

Step 2 Be sure to thread the additional bolts and install the washers before passing the bolt through the bottom plate of the template.

Step 3 Save the locking nuts (x8) and washers (x8) for installation of the Boost Charger once the concrete is cured.

Step 4 Completely install the plastic cap down on the bolt. Then, holding the bottom nut and washer flush against the top surface of the bottom plate, thread the bolt onto the nut until the distance between the bottom of the plastic cap and surface of the top place is 2.3".

Step 5 Repeat Steps 1 through 3 for the remaining seven bolts.

Step 6 Secure a second washer and nut onto the bottom of each bolt until flush with the bottom surface of the bottom plate. Tighten each nut to 50 ft-lb.

Mounting Specifications

Stay out zones and maintenance access points are indicated by hashed lines.

The following details are all shown in inches. Bollard locations are recommendations only and should be determined based on the site selection, local codes, and ADA constraints.

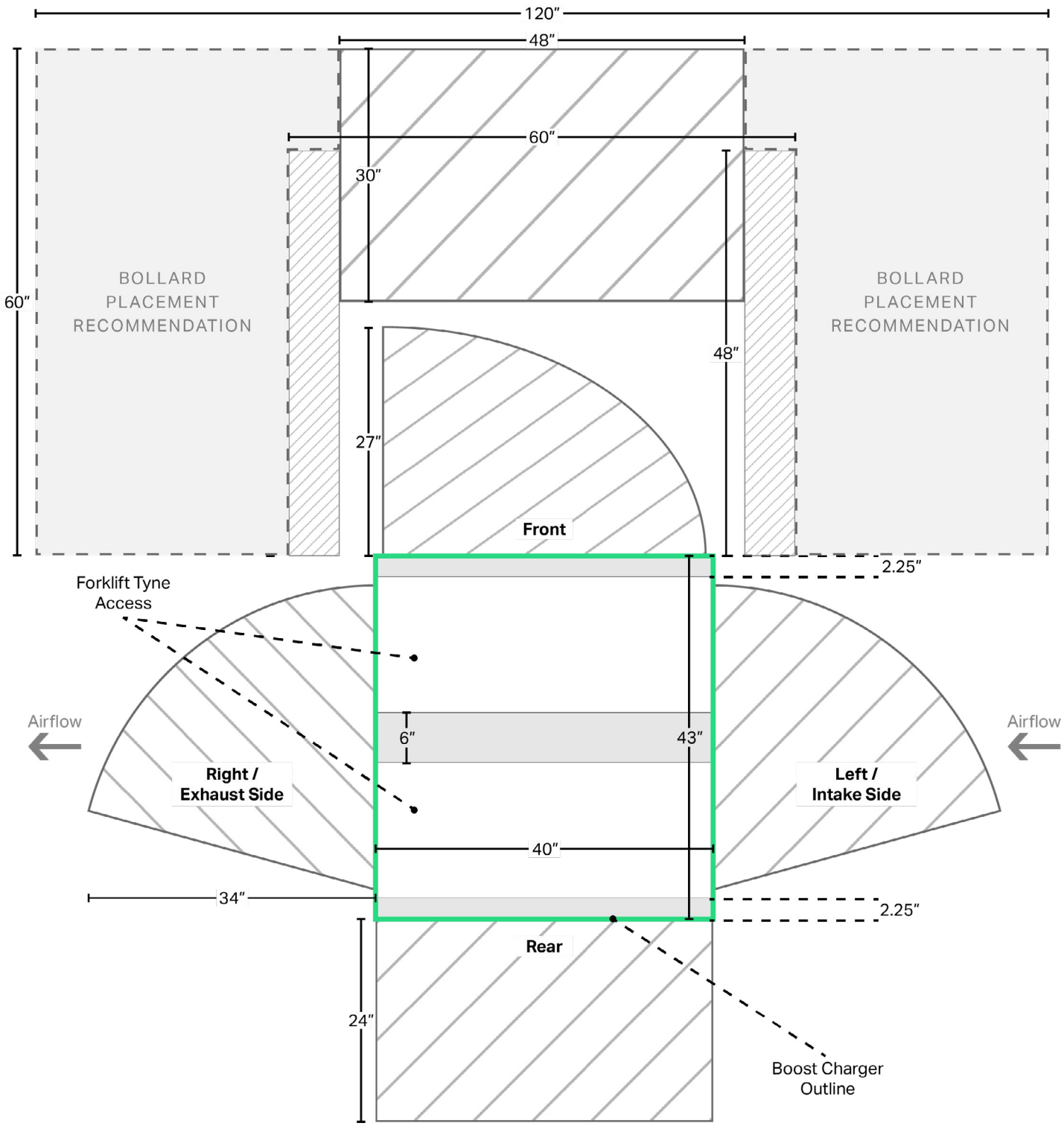

Vehicle Impact Protection

Important: When installing bollards or other barriers, be sure to verify the stay out zones identified in the mounting specifications on page 14.

It is recommended to protect the Boost Charger against vehicle impact damage when located in the path of a vehicle or in a parking lot. Check with local and state codes or the International Fire Code® (IFC®) to see if the installation of the Boost Charger will require bollards. If bollards are not required, it is recommended that the Boost Charger be protected from impact from vehicles by means of curbs, fences, railings or similar barriers. Where bollards are used, they shall be no less than 5 feet long with 2 feet below ground and encased in concrete. Posts shall be no less than 4 inches in diameter and be filled with concrete if the wall thickness is less than that of standard pipe. Posts shall be 4 feet apart on centers (maximum) and placed outside all clearance areas. Other materials may be used and shall provide equivalent protection. Such curbs or fences shall be arranged so they will not hamper free ventilation around the Boost Charger or interfere with the ADA accessibility and service of the charger in the mounting specification.

AC Conduit

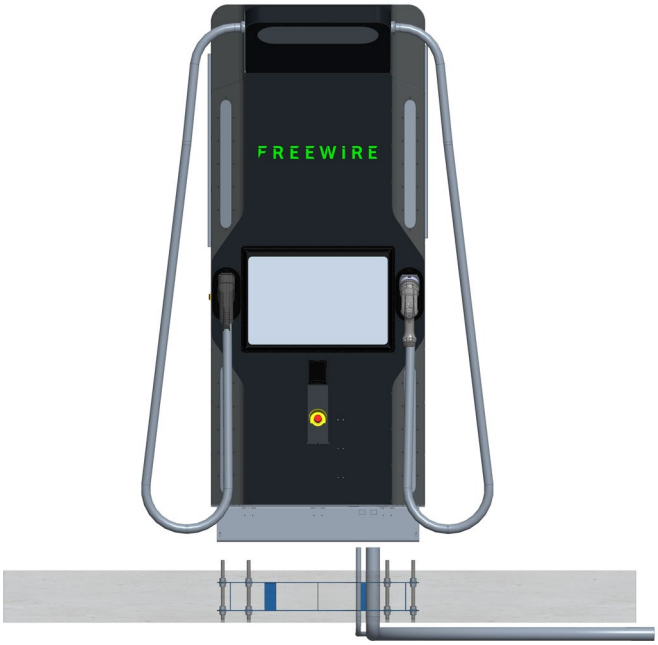

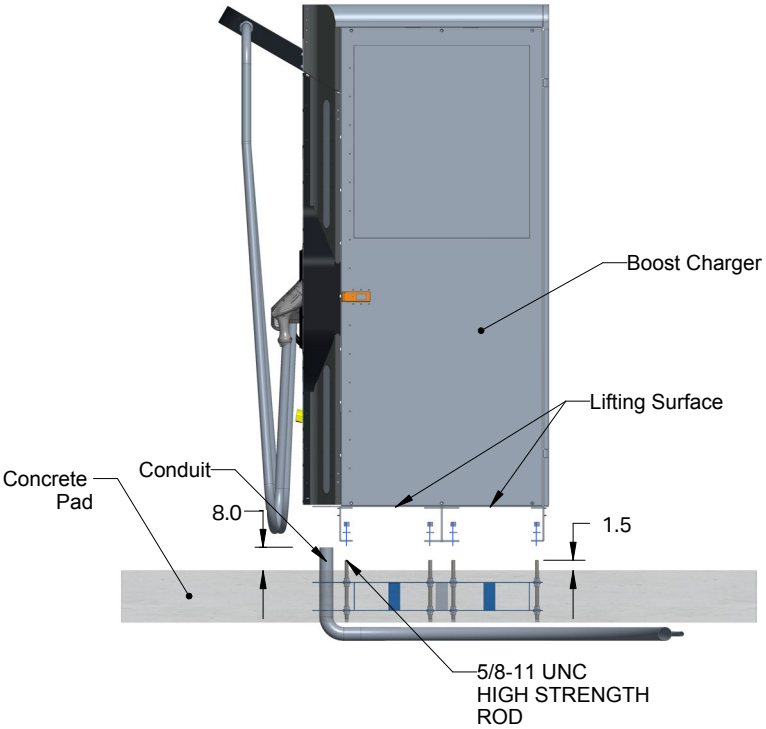

Install the Concrete Mounting Template

Dig an opening to accommodate the wiring conduit and the concrete mounting pad.

Step 1 Excavate the site making room for the concrete foundation pad that meets local codes and requirements.

Step 2 Construct a concrete form for the concrete foundation pad.

Important: Make sure that the conduit is positioned within 1/16" of the opening in the mounting template and is plumb. The conduit should extend 8.0" above the concrete surface.

Step 3 Position the concrete mounting template so that the word "FRONT" is facing up and is placed where the front of the charging station will be located.

Step 4 Slide the concrete mounting template over the conduit. For proper installation of the Boost Charger, the top surface of the template must be positioned 2.3" below the top surface of the concrete when poured. Use the bottom of the plastic caps to align with the surface of the concrete. Avoid flexing the conduit while placing the concrete mounting template. Ensure that the conduit is plumb and the concrete mounting template is level.

Important: Secure the concrete mounting template and conduit prior to pouring the concrete. While pouring the concrete and during the cure, it is important to prevent them from rising or floating out of position.

Step 5 Pour the concrete into the form ensuring that it is level and does not contain any rough portions or irregularities.

3 Boost Charger Specifications

System

Max Output Power	CHAdeMO: 100 kW CCS: 120 kW Combined: charge two vehicles up to 60 kW each
Max Output Current	CHAdeMO: 200 A CCS: 300 A
Dimensions	40 in x 43 in x 96 in
Weight	3,800 lbs
Output Voltage, Charging	200 VDC – 500 VDC

Electrical Input

Input Rating	240 (+/- 10%) VAC, split-phase, 4-Wire, 120 A, 60 Hz 208 (+/- 10%) VAC 3-phase, WYE, 5-Wire, 80 A 60 Hz
Wiring	For 240 V - 2 conductors (L1, L2) Ground For 208 V - 4 conductors (L1, L2, L3, Neutral) Ground
Required Service Panel Breaker	150 A 240 V 100 A 208 V

Interfaces

Supported Connector Types	CCS1 (SAE J1772™ Combo) CHAdeMO
Charge Cable Length	140 in
User Interaction Display	Full-color 24-inch LCD display for driver interaction
Authentication	RFID: ISO 15693, ISO 14443, NFC

Safety and Compliance

Safety Compliance	U.S.: complies with UL 2202, UL 2231-1, UL 2231-2, UL 991, UL 1973 (battery pack)
EMC Compliance	U.S.: FCC part 15 Class A

Safety: Electric Vehicle

- See the EV supplier's guide for proper care of the EV and follow directions carefully. Failure to follow EV care instructions can results in EV explosion and property damage, severe injury, or death during charging.
- Do not disconnect charger connector while the EV is charging.

Environmental Requirements

Location	Outdoor
Operating Temperature	-20° C to 55° C (-4° F to 131° F)
Storage Temperature	-20° C to 55° C (-4° F to 131° F)
Operating Humidity	Up to 95% at 55° C (131° F) non-condensing
Enclosure Rating	IP54

www.freewiretech.com

Any additional questions please contact:
(415) 484-9590
support@freewiretech.com

1933 Davis St. Suite 301A
San Leandro, CA 94577