# TEST REPORT

| | | |
|---|---|---|
| **Product** | : | smart fitness system |
| **Trade mark** | : | HYGEAR |
| **Model/Type reference** | : | STRAPS,SPIDER S |
| **Serial Number** | : | N/A |
| **Report Number** | : | EED32Q81090101 |
| **FCC ID** | : | 2AV6I-HY100H |
| **Date of Issue** | : | Aug. 14, 2024 |
| **Test Standards** | : | 47 CFR Part 15 Subpart C |
| **Test result** | : | PASS |

Prepared for:

**Hygear Inc.**

**3415 South Sepulveda Blvd., Suite 1100, Los Angeles, CA, 90034, USA**

Prepared by:

**Centre Testing International Group Co., Ltd.**
**Hongwei Industrial Zone, Bao'an 70 District,**
**Shenzhen, Guangdong, China**
**TEL: +86-755-3368 3668**
**FAX: +86-755-3368 3385**

| | | | |
|---|---|---|---|
| Compiled by: | Frazer Li | Reviewed by: | Tom Chen |
| Approved by: | Aaron Ma | Date: | Aug. 14, 2024 |

Check No.::3503260724

# 1 Content

1 CONTENT ..... 2
2 TEST SUMMARY ..... 3
3 GENERAL INFORMATION ..... 4
3.1 CLIENT INFORMATION ..... 4
3.2 GENERAL DESCRIPTION OF EUT ..... 4
3.3 TEST CONFIGURATION ..... 5
3.4 TEST ENVIRONMENT ..... 6
3.5 DESCRIPTION OF SUPPORT UNITS ..... 6
3.6 TEST LOCATION ..... 6
3.7 MEASUREMENT UNCERTAINTY (95% CONFIDENCE LEVELS, K=2) ..... 7
4 EQUIPMENT LIST ..... 8
5 TEST RESULTS AND MEASUREMENT DATA ..... 12
5.1 ANTENNA REQUIREMENT ..... 12
5.2 MAXIMUM CONDUCTED OUTPUT POWER ..... 13
5.3 DTS BANDWIDTH ..... 14
5.4 MAXIMUM POWER SPECTRAL DENSITY ..... 15
5.5 BAND EDGE MEASUREMENTS AND CONDUCTED SPURIOUS EMISSION ..... 16
5.6 RADIATED SPURIOUS EMISSION & RESTRICTED BANDS ..... 17
6 APPENDIX A ..... 34
7 PHOTOGRAPHS OF TEST SETUP ..... 35
8 PHOTOGRAPHS OF EUT CONSTRUCTIONAL DETAILS ..... 37

# 2 Test Summary

| Test Item | Test Requirement | Result |
|---|---|---|
| **Antenna Requirement** | 47 CFR Part 15 Subpart C Section 15.203/15.247 (c) | PASS |
| **AC Power Line Conducted Emission** | 47 CFR Part 15 Subpart C Section 15.207 | N/A |
| **DTS Bandwidth** | 47 CFR Part 15 Subpart C Section 15.247 (a)(2) | PASS |
| **Maximum Conducted Output Power** | 47 CFR Part 15 Subpart C Section 15.247 (b)(3) | PASS |
| **Maximum Power Spectral Density** | 47 CFR Part 15 Subpart C Section 15.247 (e) | PASS |
| **Band Edge Measurements** | 47 CFR Part 15 Subpart C Section 15.247(d) | PASS |
| **Conducted Spurious Emissions** | 47 CFR Part 15 Subpart C Section 15.247(d) | PASS |
| **Radiated Spurious Emission & Restricted bands** | 47 CFR Part 15 Subpart C Section 15.205/15.209 | PASS |

Remark:
This test report (Ref. No.: EED32Q81090101) is only valid with the original test report (Ref. No.: EED32Q80349701).Review this report and original report, this report just updated model No..

N/A:Bluetooth does not work when the product is charging.
Company Name and Address shown on Report, the sample(s) and sample Information were provided by the applicant who should be responsible for the authenticity which CTI hasn't verified.

Model No.: STRAPS,SPIDER S
Only the model STRAPS was tested. Only the color and accessories are different. STRAPS and SPIDER S with same inner construction for circuitry and electrical. SPIDER S is a subset of STRAPS without accessories.

# 3 General Information

## 3.1 Client Information

| | |
|---|---|
| Applicant: | Hygear Inc. |
| Address of Applicant: | 3415 South Sepulveda Blvd., Suite 1100, Los Angeles, CA, 90034, USA |
| Manufacturer: | Hygear Inc. |
| Address of Manufacturer: | 3415 South Sepulveda Blvd., Suite 1100, Los Angeles, CA, 90034, USA |
| Factory: | Huizhou Sunwinon Electronics Co., Ltd. |
| Address of Factory: | Floor 3 of No.9 Building, No. 10 Building, Floor 3 of No. 21 Building, No. 22 Building, Sunwoda Industrial Park, Dongpo Avenue, Yuanzhou Town, Boluo County, Huizhou City, Guangdong Province, P.R.China |

## 3.2 General Description of EUT

| | | |
|---|---|---|
| Product Name: | smart fitness system | |
| Model No.: | STRAPS,SPIDER S | |
| Test Model No.: | STRAPS | |
| Trade mark: | HYGEAR | |
| Product Type: | ☐ Mobile ☒ Portable ☐ Fix Location | |
| Operation Frequency: | 2402MHz~2480MHz | |
| Modulation Type: | GFSK | |
| Transfer Rate: | ☒ 1Mbps ☒ 2Mbps | |
| Number of Channel: | 40 | |
| Antenna Type: | Ceramic Chip Antenna | |
| Antenna Gain: | 4.75dBi | |
| Power Supply: | USB Port: | DC 5.0V |
| | Battery: | DC 3.7V |
| Test Voltage: | DC 3.7V | |
| Sample Received Date: | Apr. 10, 2024 | |
| Sample tested Date: | Apr. 10, 2024 to Apr. 24, 2024 | |

| Operation Frequency each of channel | | | | | | | |
|---|---|---|---|---|---|---|---|
| Channel | Frequency | Channel | Frequency | Channel | Frequency | Channel | Frequency |
| 0 | 2402MHz | 10 | 2422MHz | 20 | 2442MHz | 30 | 2462MHz |
| 1 | 2404MHz | 11 | 2424MHz | 21 | 2444MHz | 31 | 2464MHz |
| 2 | 2406MHz | 12 | 2426MHz | 22 | 2446MHz | 32 | 2466MHz |
| 3 | 2408MHz | 13 | 2428MHz | 23 | 2448MHz | 33 | 2468MHz |
| 4 | 2410MHz | 14 | 2430MHz | 24 | 2450MHz | 34 | 2470MHz |
| 5 | 2412MHz | 15 | 2432MHz | 25 | 2452MHz | 35 | 2472MHz |
| 6 | 2414MHz | 16 | 2434MHz | 26 | 2454MHz | 36 | 2474MHz |
| 7 | 2416MHz | 17 | 2436MHz | 27 | 2456MHz | 37 | 2476MHz |
| 8 | 2418MHz | 18 | 2438MHz | 28 | 2458MHz | 38 | 2478MHz |
| 9 | 2420MHz | 19 | 2440MHz | 29 | 2460MHz | 39 | 2480MHz |

Note:
In section 15.31(m), regards to the operating frequency range over 10 MHz, the lowest frequency, the middle frequency, and the highest frequency of channel were selected to perform the test, and the selected channel see below:

| Channel | Frequency |
|---|---|
| The lowest channel (CH0) | 2402MHz |
| The middle channel (CH19) | 2440MHz |
| The highest channel (CH39) | 2480MHz |

## 3.3 Test Configuration

| **EUT Test Software Settings:** | |
|---|---|
| Test Software: | nRF Connect for Desktop.exe (manufacturer declare ) |
| EUT Power Grade: | Default (Power level is built-in set parameters and cannot be changed and selected) |

Use test software to set the lowest frequency, the middle frequency and the highest frequency keep transmitting of the EUT.

| Test Mode | Modulation | Rate | Channel | Frequency(MHz) |
|---|---|---|---|---|
| Mode a | GFSK | 1Mbps | CH0 | 2402 |
| Mode b | GFSK | 1Mbps | CH19 | 2440 |
| Mode c | GFSK | 1Mbps | CH39 | 2480 |
| Mode d | GFSK | 2Mbps | CH0 | 2402 |
| Mode e | GFSK | 2Mbps | CH19 | 2440 |
| Mode f | GFSK | 2Mbps | CH39 | 2480 |

## 3.4 Test Environment

| | |
|---|---|
| **Operating Environment:** | |
| **Radiated Spurious Emissions:** | |
| Temperature: | 22~25.0 °C |
| Humidity: | 50~55 % RH |
| Atmospheric Pressure: | 1010mbar |
| **Conducted Emissions:** | |
| Temperature: | 22~25.0 °C |
| Humidity: | 50~55 % RH |
| Atmospheric Pressure: | 1010mbar |
| **RF Conducted:** | |
| Temperature: | 22~25.0 °C |
| Humidity: | 50~55 % RH |
| Atmospheric Pressure: | 1010mbar |

## 3.5 Description of Support Units

The EUT has been tested with associated equipment below.

1） support equipment

| Description | Manufacturer | Model No. | Certification | Supplied by |
|---|---|---|---|---|
| Netbook | ASUSTek | / | FCC&CE | CTI |

## 3.6 Test Location

All tests were performed at:

Centre Testing International Group Co., Ltd
Building C, Hongwei Industrial Park Block 70, Bao'an District, Shenzhen, China
Telephone: +86 (0) 755 33683668 Fax:+86 (0) 755 33683385
No tests were sub-contracted.
FCC Designation No.: CN1164

## 3.7 Measurement Uncertainty (95% confidence levels, k=2)

| No. | Item | Measurement Uncertainty |
|---|---|---|
| 1 | Radio Frequency | $7.9 \times 10^{-8}$ |
| 2 | RF power, conducted | 0.46dB (30MHz-1GHz) |
| | | 0.55dB (1GHz-40GHz) |
| 3 | Radiated Spurious emission test | 3.3dB (9kHz-30MHz) |
| | | 4.3dB (30MHz-1GHz) |
| | | 4.5dB (1GHz-18GHz) |
| | | 3.4dB (18GHz-40GHz) |
| 4 | Conduction emission | 3.5dB (9kHz to 150kHz) |
| | | 3.1dB (150kHz to 30MHz) |
| 5 | Temperature test | 0.64°C |
| 6 | Humidity test | 3.8% |
| 7 | DC power voltages | 0.026% |

# 4 Equipment List

| BT/WIFI/SRD RF test system | | | | | |
|---|---|---|---|---|---|
| **Equipment** | **Manufacturer** | **Mode No.** | **Serial Number** | **Cal. Date (mm-dd-yyyy)** | **Cal. Due date (mm-dd-yyyy)** |
| Communication test set | R&S | CMW500 | 107929 | 06-28-2023 | 06-27-2024 |
| Signal Generator | R&S | SMBV100A | 1407.6004K02-262149-CV | 09-05-2023 | 09-04-2024 |
| Spectrum Analyzer | R&S | FSV40 | 101200 | 07-25-2023 | 07-24-2024 |
| RF control unit(power unit) | MWRF-test | MW100-RFCB | MW220620CTI-42 | 06-28-2023 | 06-27-2024 |
| High-low temperature test chamber | Dong Guang Qin Zhuo | LK-80GA | QZ20150611879 | 11/12/2023 | 12/10/2024 |
| Temperature/ Humidity Indicator | biaozhi | HM10 | 1804186 | 06-01-2023 | 05-31-2024 |
| BT&WI-FI Automatic test software | MWRF-test | MTS 8310 | V2.0.0.0 | --- | --- |

| 3M Semi/full-anechoic Chamber(2#) | | | | | |
|---|---|---|---|---|---|
| **Equipment** | **Manufacturer** | **Model No.** | **Serial Number** | **Cal. Date (mm-dd-yyyy)** | **Cal. Due date (mm-dd-yyyy)** |
| 3M Chamber & Accessory Equipment | TDK | SAC-3 | --- | 05-22-2022 | 05-21-2025 |
| Receiver | R&S | ESCI7 | 100938-003 | 09-22-2023 | 09-21-2024 |
| Spectrum Analyzer | R&S | FSV40 | 101200 | 07-25-2023 | 07-24-2024 |
| Loop Antenna | Schwarzbeck | FMZB 1519B | 1519B-076 | 04-17-2021<br>04-16-2024 | 04-16-2024<br>04-15-2025 |
| TRILOG Broadband Antenna | Schwarzbeck | VULB9163 | 9163-618 | 05-21-2023 | 05-20-2024 |
| Horn Antenna | Schwarzbeck | BBHA 9120D | 9120D-1869 | 04-17-2021<br>04-16-2024 | 04-16-2024<br>04-15-2025 |
| Horn Antenna | A.H.SYSTEMS | SAS-574 | 374 | 05-29-2021 | 05-28-2024 |
| Preamplifier | Agilent | 11909A | 12-1 | 03-22-2024 | 03-21-2025 |
| Preamplifier | EMCI | EMC051845SE | 980380 | 12-14-2023 | 12-13-2024 |
| Preamplifier | CD | PAP-1840-60 | 6041.6042 | 07-03-2023 | 07-02-2024 |
| Cable line | Fulai(7M) | SF106 | 5219/6A | --- | --- |
| Cable line | Fulai(6M) | SF106 | 5220/6A | --- | --- |
| Cable line | Fulai(3M) | SF106 | 5216/6A | --- | --- |
| Cable line | Fulai(3M) | SF106 | 5217/6A | --- | --- |
| Test software | Fara | EZ-EMC | EMEC-3A1-Pre | --- | --- |

| 3M full-anechoic Chamber | | | | | |
|---|---|---|---|---|---|
| **Equipment** | **Manufacturer** | **Model No.** | **Serial Number** | **Cal. Date (mm-dd-yyyy)** | **Cal. Due date (mm-dd-yyyy)** |
| Fully Anechoic Chamber | TDK | FAC-3 | --- | 01-09-2024 | 01-08-2027 |
| Receiver | Keysight | N9038A | MY57290136 | 01-09-2024 | 01-08-2025 |
| Spectrum Analyzer | Keysight | N9020B | MY57111112 | 01-29-2024 | 01-28-2025 |
| Spectrum Analyzer | Keysight | N9030B | MY57140871 | 01-23-2024 | 01-22-2025 |
| TRILOG Broadband Antenna | Schwarzbeck | VULB 9163 | 9163-1148 | 04-30-2021<br>04-28-2024 | 04-29-2024<br>04-27-2025 |
| Horn Antenna | Schwarzbeck | BBHA 9170 | 9170-832 | 04-17-2021<br>04-16-2024 | 04-16-2024<br>04-15-2025 |
| Horn Antenna | ETS-LINDGREN | 3117 | 57407 | 07-04-2021 | 07-03-2024 |
| Preamplifier | EMCI | EMC001330 | 980563 | 03-08-2024 | 03-07-2025 |
| Preamplifier | Tonscend | TAP-011858 | AP21B806112 | 07-25-2023 | 07-24-2024 |
| Preamplifier | Tonscend | EMC051845SE | 980380 | 12-14-2023 | 12-13-2024 |
| Communication test set | R&S | CMW500 | 102898 | 12-14-2023 | 12-13-2024 |
| Temperature/ Humidity Indicator | biaozhi | GM1360 | EE1186631 | 04-07-2024 | 04-06-2025 |
| RSE Automatic test software | JS Tonscend | JS36-RSE | V4.0.0.0 | --- | --- |
| Cable line | Times | SFT205-NMSM-2.50M | 394812-0001 | | --- |
| Cable line | Times | SFT205-NMSM-2.50M | 394812-0002 | --- | --- |
| Cable line | Times | SFT205-NMSM-2.50M | 394812-0003 | --- | --- |
| Cable line | Times | SFT205-NMSM-2.50M | 393495-0001 | --- | --- |

| | | | | | |
|---|---|---|---|---|---|
| Cable line | Times | EMC104-NMNM-1000 | SN160710 | --- | --- |
| Cable line | Times | SFT205-NMSM-3.00M | 394813-0001 | --- | --- |
| Cable line | Times | SFT205-NMNM-1.50M | 381964-0001 | --- | --- |
| Cable line | Times | SFT205-NMSM-7.00M | 394815-0001 | --- | --- |
| Cable line | Times | HF160-KMKM-3.00M | 393493-0001 | --- | --- |

# 5 Test results and Measurement Data

## 5.1 Antenna Requirement

| **Standard requirement:** | 47 CFR Part 15C Section 15.203 /247(c) |
|---|---|
| 15.203 requirement:<br>An intentional radiator shall be designed to ensure that no antenna other than that furnished by the responsible party shall be used with the device. The use of a permanently attached antenna or of an antenna that uses a unique coupling to the intentional radiator, the manufacturer may design the unit so that a broken antenna can be replaced by the user, but the use of a standard antenna jack or electrical connector is prohibited.<br>15.247(b) (4) requirement:<br>The conducted output power limit specified in paragraph (b) of this section is based on the use of antennas with directional gains that do not exceed 6 dBi. Except as shown in paragraph (c) of this section, if transmitting antennas of directional gain greater than 6 dBi are used, the conducted output power from the intentional radiator shall be reduced below the stated values in paragraphs (b)(1), (b)(2), and (b)(3) of this section, as appropriate, by the amount in dB that the directional gain of the antenna exceeds 6 dBi. | |
| **EUT Antenna:** | Please see Internal photos |
| The antenna is Ceramic Chip Antenna. The best case gain of the antenna is 4.75dBi. | |

## 5.2 Maximum Conducted Output Power

| | |
|---|---|
| Test Requirement: | 47 CFR Part 15C Section 15.247 (b)(3) |
| Test Method: | ANSI C63.10 2013 |
| Test Setup: | 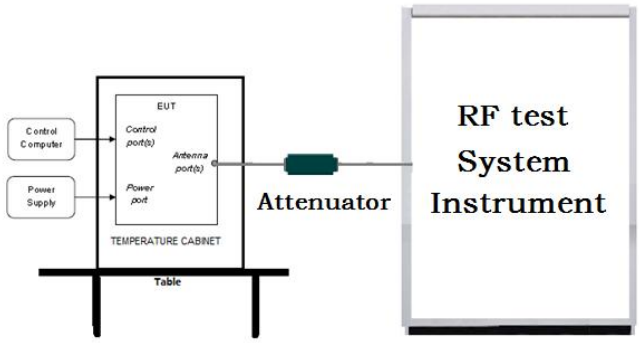 <br>Remark: Offset=Cable loss+ attenuation factor. |
| Test Procedure: | a) Set the RBW ⩾ DTS bandwidth.<br>b) Set VBW ⩾ 3 × RBW.<br>c) Set span ⩾ 3 x RBW<br>d) Sweep time = auto couple.<br>e) Detector = peak.<br>f) Trace mode = max hold.<br>g) Allow trace to fully stabilize.<br>h) Use peak marker function to determine the peak amplitude level. |
| Limit: | 30dBm |
| Test Mode: | Refer to clause 5.3 |
| Test Results: | Refer to Appendix A |

## 5.3 DTS Bandwidth

| | |
|---|---|
| Test Requirement: | 47 CFR Part 15C Section 15.247 (a)(2) |
| Test Method: | ANSI C63.10 2013 |
| Test Setup: | 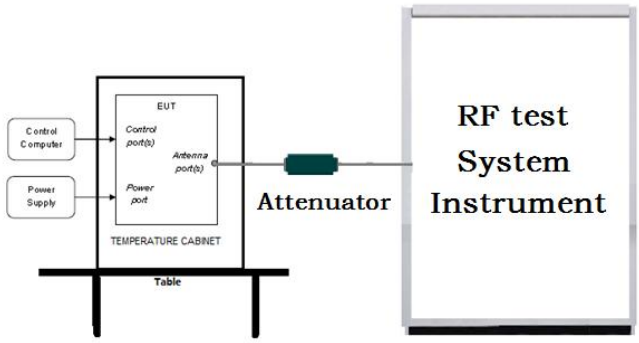 <br>Remark: Offset=Cable loss+ attenuation factor. |
| Test Procedure: | a) Set RBW = 100 kHz.<br>b) Set the VBW ⩾[3 × RBW].<br>c) Detector = peak.<br>d) Trace mode = max hold.<br>e) Sweep = auto couple.<br>f) Allow the trace to stabilize.<br>g) Measure the maximum width of the emission that is constrained by the frequencies associated with the two outermost amplitude points (upper and lower frequencies) that are attenuated by 6 dB relative to the maximum level measured in the fundamental emission. |
| Limit: | ≥ 500 kHz |
| Test Mode: | Refer to clause 5.3 |
| Test Results: | Refer to Appendix A |

## 5.4 Maximum Power Spectral Density

| | |
|---|---|
| Test Requirement: | 47 CFR Part 15C Section 15.247 (e) |
| Test Method: | ANSI C63.10 2013 |
| Test Setup: | 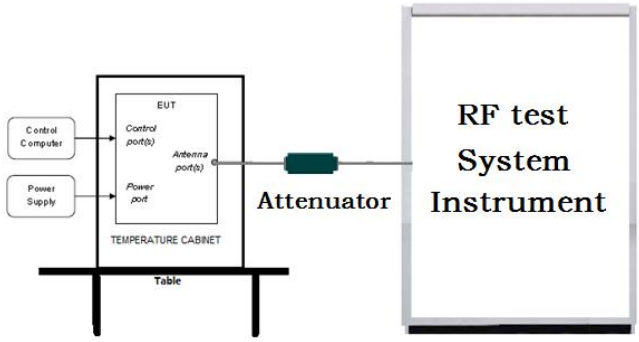 <br>Remark: Offset=Cable loss+ attenuation factor. |
| Test Procedure: | a) Set analyzer center frequency to DTS channel center frequency.<br>b) Set the span to 1.5 times the DTS bandwidth.<br>c) Set the RBW to 3 kHz ＜ RBW ＜ 100 kHz.<br>d) Set the VBW ＞ [3 × RBW].<br>e) Detector = peak.<br>f) Sweep time = auto couple.<br>g) Trace mode = max hold.<br>h) Allow trace to fully stabilize.<br>i) Use the peak marker function to determine the maximum amplitude level within the RBW.<br>j) If measured value exceeds requirement, then reduce RBW (but no less than 3 kHz) and repeat. |
| Limit: | ≤8.00dBm/3kHz |
| Test Mode: | Refer to clause 5.3 |
| Test Results: | Refer to Appendix A |

## 5.5 Band Edge measurements and Conducted Spurious Emission

| | |
|---|---|
| Test Requirement: | 47 CFR Part 15C Section 15.247 (d) |
| Test Method: | ANSI C63.10 2013 |
| Test Setup: | 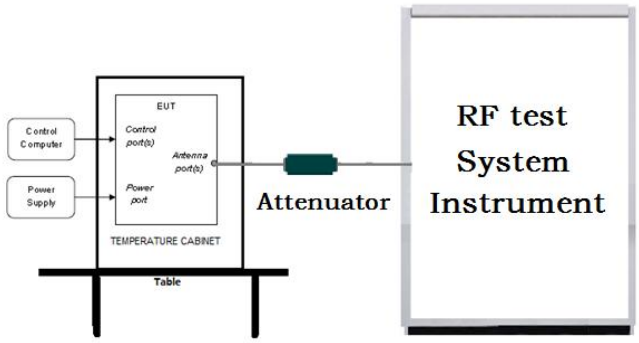 <br>Remark: Offset=Cable loss+ attenuation factor. |
| Test Procedure: | a) Set RBW =100KHz.<br>b) Set VBW = 300KHz.<br>c) Sweep time = auto couple.<br>d) Detector = peak.<br>e) Trace mode = max hold.<br>f) Allow trace to fully stabilize.<br>g) Use peak marker function to determine the peak amplitude level. |
| Limit: | In any 100 kHz bandwidth outside the frequency band in which the spread spectrum intentional radiator is operating, the radio frequency power that is produced by the intentional radiator shall be at least 20 dB below that in the 100 kHz bandwidth within the band that contains the highest level of the desired power, based on either an RF conducted or a radiated measurement. |
| Test Mode: | Refer to clause 5.3 |
| Test Results: | Refer to Appendix A |

## 5.6 Radiated Spurious Emission & Restricted bands

| | |
|---|---|
| Test Requirement: | 47 CFR Part 15C Section 15.209 and 15.205 |
| Test Method: | ANSI C63.10 2013 |
| Test Site: | Measurement Distance: 3m (Semi-Anechoic Chamber) |
| Receiver Setup: | |

| Frequency | Detector | RBW | VBW | Remark |
|---|---|---|---|---|
| 0.009MHz-0.090MHz | Peak | 10kHz | 30kHz | Peak |
| 0.009MHz-0.090MHz | Average | 10kHz | 30kHz | Average |
| 0.090MHz-0.110MHz | Quasi-peak | 10kHz | 30kHz | Quasi-peak |
| 0.110MHz-0.490MHz | Peak | 10kHz | 30kHz | Peak |
| 0.110MHz-0.490MHz | Average | 10kHz | 30kHz | Average |
| 0.490MHz -30MHz | Quasi-peak | 10kHz | 30kHz | Quasi-peak |
| 30MHz-1GHz | Quasi-peak | 100 kHz | 300kHz | Quasi-peak |
| Above 1GHz | Peak | 1MHz | 3MHz | Peak |
| | Peak | 1MHz | 10kHz | Average |

Limit:

| Frequency | Field strength (microvolt/meter) | Limit (dBuV/m) | Remark | Measurement distance (m) |
|---|---|---|---|---|
| 0.009MHz-0.490MHz | 2400/F(kHz) | - | - | 300 |
| 0.490MHz-1.705MHz | 24000/F(kHz) | - | - | 30 |
| 1.705MHz-30MHz | 30 | - | - | 30 |
| 30MHz-88MHz | 100 | 40.0 | Quasi-peak | 3 |
| 88MHz-216MHz | 150 | 43.5 | Quasi-peak | 3 |
| 216MHz-960MHz | 200 | 46.0 | Quasi-peak | 3 |
| 960MHz-1GHz | 500 | 54.0 | Quasi-peak | 3 |
| Above 1GHz | 500 | 54.0 | Average | 3 |

Note: 15.35(b), Unless otherwise specified, the limit on peak radio frequency emissions is 20dB above the maximum permitted average emission limit applicable to the equipment under test. This peak limit applies to the total peak emission level radiated by the device.

| Test Setup: | |
|---|---|

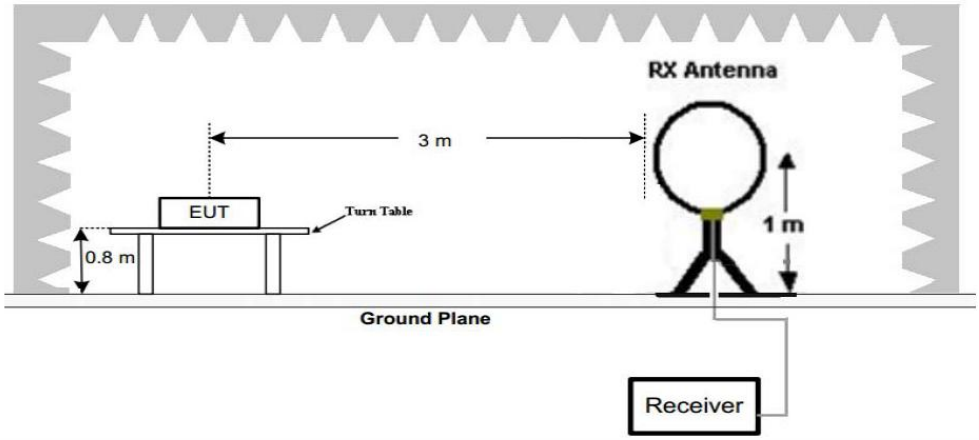


Figure 1. Below 30MHz

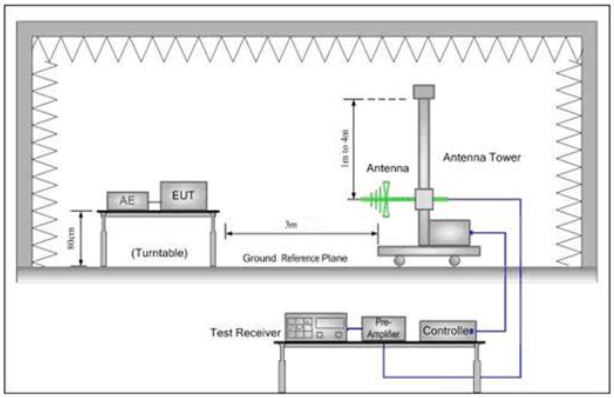


Figure 2. 30MHz to 1GHz

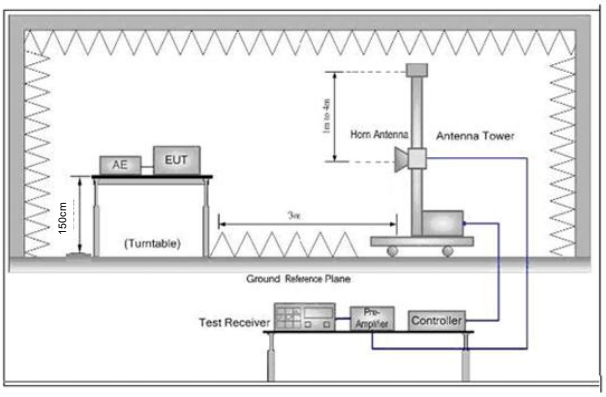


Figure 3. Above 1 GHz

| Test Procedure: | a. 1) Below 1G: The EUT was placed on the top of a rotating table 0.8 meters above the ground at a 3 meter semi-anechoic camber. The table was rotated 360 degrees to determine the position of the highest radiation.<br>2) Above 1G: The EUT was placed on the top of a rotating table 1.5 meters above the ground at a 3 meter semi-anechoic camber. The table was rotated 360 degrees to determine the position of the highest radiation.<br>Note: For the radiated emission test above 1GHz:<br>Place the measurement antenna away from each area of the EUT determined to be a source of emissions at the specified measurement distance, while keeping the measurement antenna aimed at the source of emissions at each frequency of significant emissions, with polarization oriented for maximum response. The measurement antenna may have to be higher or lower than the EUT, depending on the radiation pattern of the emission and staying aimed at the emission source for receiving the maximum signal. The final measurement antenna elevation shall be that which maximizes the emissions. The measurement antenna elevation for maximum emissions shall be restricted to a range of heights of from 1 m to 4 m above the ground or reference ground plane.<br>b. The EUT was set 3 meters away from the interference-receiving antenna, which was mounted on the top of a variable-height antenna tower.<br>c. The antenna height is varied from one meter to four meters above the ground to determine the maximum value of the field strength. Both |
|---|---|

| | |
|---|---|
| | horizontal and vertical polarizations of the antenna are set to make the measurement.<br>d. For each suspected emission, the EUT was arranged to its worst case and then the antenna was tuned to heights from 1 meter to 4 meters (for the test frequency of below 30MHz, the antenna was tuned to heights 1 meter) and the rotatable table was turned from 0 degrees to 360 degrees to find the maximum reading.<br>e. The test-receiver system was set to Peak Detect Function and Specified Bandwidth with Maximum Hold Mode.<br>f. If the emission level of the EUT in peak mode was 10dB lower than the limit specified, then testing could be stopped and the peak values of the EUT would be reported. Otherwise the emissions that did not have 10dB margin would be re-tested one by one using peak, quasi-peak or average method as specified and then reported in a data sheet.<br>g. Test the EUT in the lowest channel (2402MHz),the middle channel (2440MHz),the Highest channel (2480MHz)<br>h. The radiation measurements are performed in X, Y, Z axis positioning for Transmitting mode, and found the X axis positioning which it is the worst case.<br>i. Repeat above procedures until all frequencies measured was complete. |
| Test Mode: | Refer to clause 5.3 |
| Test Results: | Pass |

## Radiated Spurious Emission below 1GHz:

During the test, the Radiates Emission from 30MHz to 1GHz was performed in all modes, only the worst case highest channel of GFSK 1M was recorded in the report.

Polarization: Horizontal

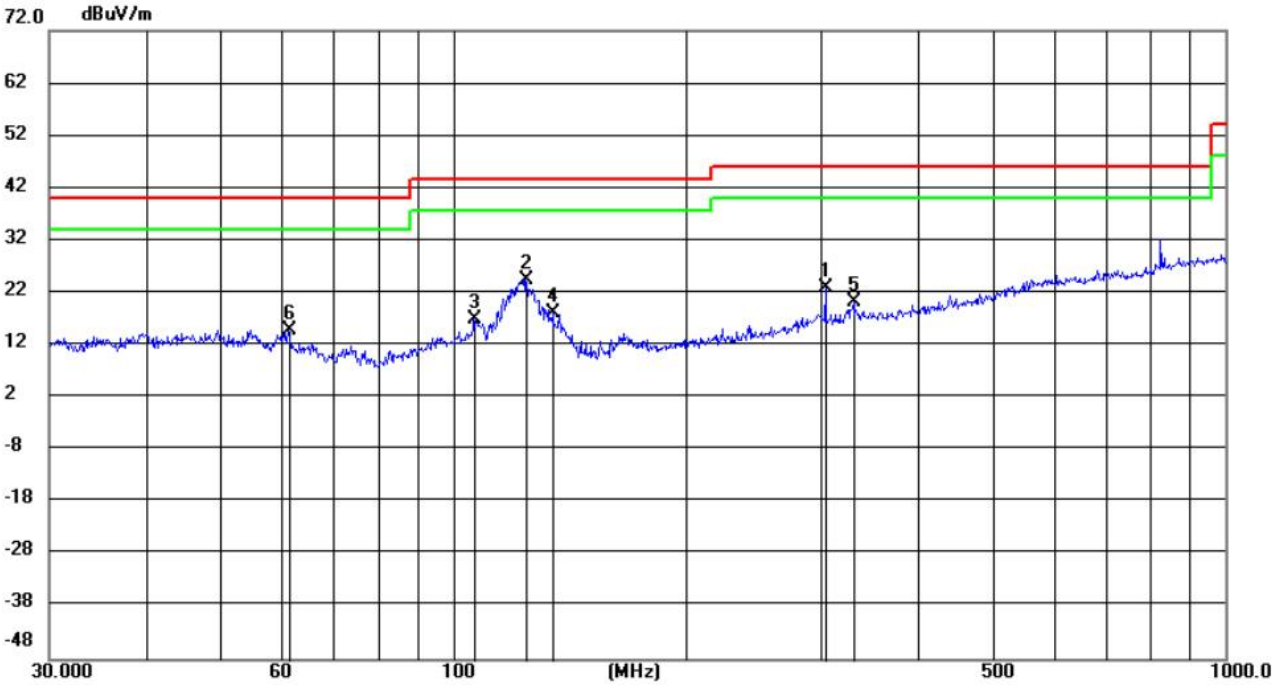


| No. | Mk. | Freq. | Reading Level | Correct Factor | Measure-ment | Limit | Margin | | Antenna Height | Table Degree | |
|---|---|---|---|---|---|---|---|---|---|---|---|
| | | MHz | dBuV | dB | dBuV/m | dBuV/m | dB | Detector | cm | degree | Comment |
| 1 | | 304.2363 | 6.11 | 16.75 | 22.86 | 46.00 | -23.14 | QP | 100 | 280 | |
| 2 | * | 124.2200 | 13.32 | 11.08 | 24.40 | 43.50 | -19.10 | QP | 199 | 360 | |
| 3 | | 106.5343 | 3.69 | 13.23 | 16.92 | 43.50 | -26.58 | QP | 100 | 310 | |
| 4 | | 134.7715 | 8.31 | 9.85 | 18.16 | 43.50 | -25.34 | QP | 199 | 7 | |
| 5 | | 330.2527 | 2.99 | 17.27 | 20.26 | 46.00 | -25.74 | QP | 100 | 259 | |
| 6 | | 61.2388 | 1.84 | 12.96 | 14.80 | 40.00 | -25.20 | QP | 100 | 73 | |

Polarization: Vertical

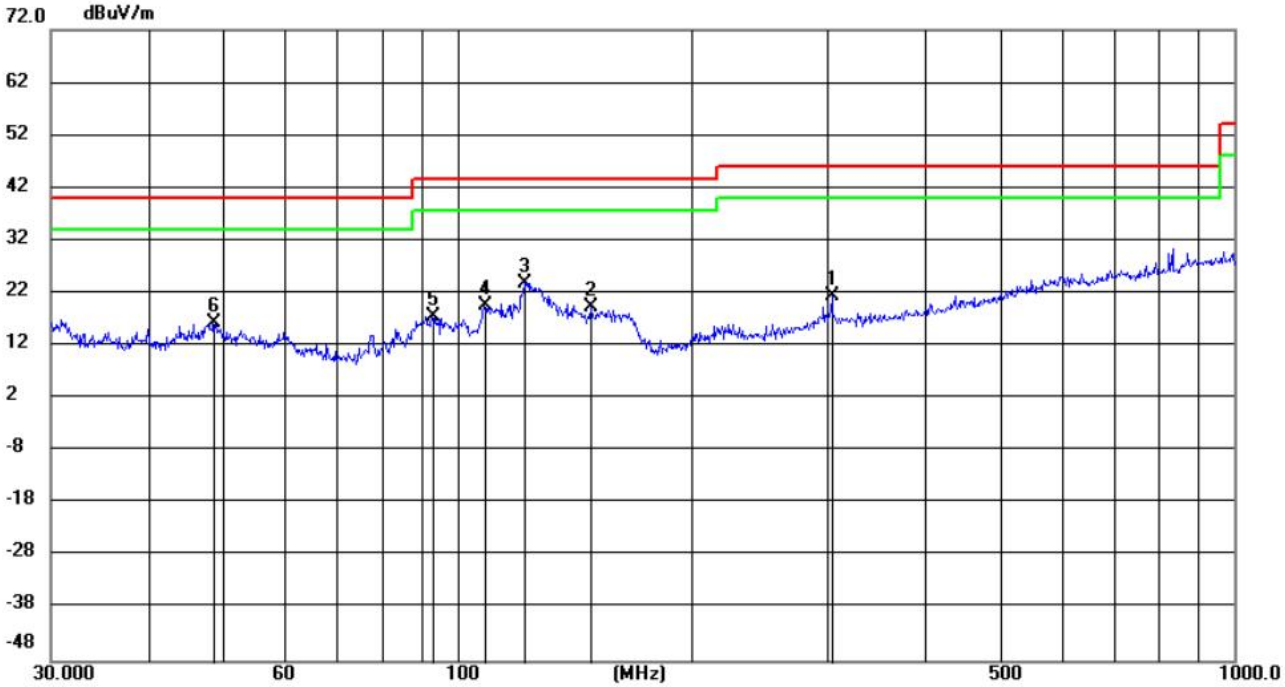


| No. | Mk. | Freq. | Reading Level | Correct Factor | Measure-ment | Limit | Margin | | Antenna Height | Table Degree | |
|---|---|---|---|---|---|---|---|---|---|---|---|
| | | MHz | dBuV | dB | dBuV/m | dBuV/m | dB | Detector | cm | degree | Comment |
| 1 | | 304.1830 | 4.74 | 16.75 | 21.49 | 46.00 | -24.51 | QP | 200 | 143 | |
| 2 | | 148.6493 | 9.70 | 9.69 | 19.39 | 43.50 | -24.11 | QP | 100 | 315 | |
| 3 | * | 122.1681 | 12.54 | 11.44 | 23.98 | 43.50 | -19.52 | QP | 100 | 273 | |
| 4 | | 108.5518 | 6.56 | 13.14 | 19.70 | 43.50 | -23.80 | QP | 100 | 304 | |
| 5 | | 92.8685 | 5.18 | 12.48 | 17.66 | 43.50 | -25.84 | QP | 100 | 360 | |
| 6 | | 48.6548 | 2.25 | 14.15 | 16.40 | 40.00 | -23.60 | QP | 100 | 7 | |

## Radiated Spurious Emission above 1GHz:

| Mode: | | | Bluetooth LE 1Mbps GFSK Transmitting | | | Channel: | | 2402 MHz | |
|---|---|---|---|---|---|---|---|---|---|
| NO | Freq. [MHz] | Factor [dB] | Reading [dBμV] | Level [dBμV/m] | Limit [dBμV/m] | Margin [dB] | Result | Polarity | Remark |
| 1 | 3740.0493 | -17.48 | 53.57 | 36.09 | 74.00 | 37.91 | Pass | H | PK |
| 2 | 4764.1176 | -13.54 | 50.39 | 36.85 | 74.00 | 37.15 | Pass | H | PK |
| 3 | 7277.2852 | -7.01 | 48.01 | 41.00 | 74.00 | 33.00 | Pass | H | PK |
| 4 | 8556.3704 | -3.69 | 47.70 | 44.01 | 74.00 | 29.99 | Pass | H | PK |
| 5 | 11629.5753 | 0.66 | 44.98 | 45.64 | 74.00 | 28.36 | Pass | H | PK |
| 6 | 13672.7115 | 5.41 | 42.59 | 48.00 | 74.00 | 26.00 | Pass | H | PK |
| 7 | 3236.0157 | -18.34 | 56.32 | 37.98 | 74.00 | 36.02 | Pass | V | PK |
| 8 | 4880.1253 | -13.46 | 54.84 | 41.38 | 74.00 | 32.62 | Pass | V | PK |
| 9 | 7320.288 | -6.72 | 47.46 | 40.74 | 74.00 | 33.26 | Pass | V | PK |
| 10 | 9496.4331 | -0.47 | 43.76 | 43.29 | 74.00 | 30.71 | Pass | V | PK |
| 11 | 11047.5365 | 0.25 | 44.20 | 44.45 | 74.00 | 29.55 | Pass | V | PK |
| 12 | 13433.6956 | 4.86 | 43.24 | 48.10 | 74.00 | 25.90 | Pass | V | PK |

| Mode: | | | Bluetooth LE 1Mbps GFSK Transmitting | | | Channel: | | 2440 MHz | |
|---|---|---|---|---|---|---|---|---|---|
| NO | Freq. [MHz] | Factor [dB] | Reading [dBμV] | Level [dBμV/m] | Limit [dBμV/m] | Margin [dB] | Result | Polarity | Remark |
| 1 | 3440.0293 | -18.16 | 54.27 | 36.11 | 74.00 | 37.89 | Pass | H | PK |
| 2 | 4393.0929 | -14.91 | 51.71 | 36.80 | 74.00 | 37.20 | Pass | H | PK |
| 3 | 6216.2144 | -10.05 | 48.37 | 38.32 | 74.00 | 35.68 | Pass | H | PK |
| 4 | 8535.369 | -3.77 | 45.95 | 42.18 | 74.00 | 31.82 | Pass | H | PK |
| 5 | 11137.5425 | -0.35 | 44.88 | 44.53 | 74.00 | 29.47 | Pass | H | PK |
| 6 | 14225.7484 | 6.95 | 41.28 | 48.23 | 74.00 | 25.77 | Pass | H | PK |
| 7 | 3198.0132 | -18.51 | 57.07 | 38.56 | 74.00 | 35.44 | Pass | V | PK |
| 8 | 4880.1253 | -13.46 | 54.83 | 41.37 | 74.00 | 32.63 | Pass | V | PK |
| 9 | 7319.288 | -6.72 | 46.91 | 40.19 | 74.00 | 33.81 | Pass | V | PK |
| 10 | 8975.3984 | -2.85 | 45.93 | 43.08 | 74.00 | 30.92 | Pass | V | PK |
| 11 | 11657.5772 | 0.30 | 45.73 | 46.03 | 74.00 | 27.97 | Pass | V | PK |
| 12 | 13754.717 | 4.55 | 43.90 | 48.45 | 74.00 | 25.55 | Pass | V | PK |

| Mode: | | | Bluetooth LE 1Mbps GFSK Transmitting | | | Channel: | | 2480 MHz | |
|---|---|---|---|---|---|---|---|---|---|
| NO | Freq. [MHz] | Factor [dB] | Reading [dBμV] | Level [dBμV/m] | Limit [dBμV/m] | Margin [dB] | Result | Polarity | Remark |
| 1 | 3790.0527 | -17.34 | 53.86 | 36.52 | 74.00 | 37.48 | Pass | H | PK |
| 2 | 4960.1307 | -13.35 | 50.62 | 37.27 | 74.00 | 36.73 | Pass | H | PK |
| 3 | 7440.296 | -6.29 | 46.59 | 40.30 | 74.00 | 33.70 | Pass | H | PK |
| 4 | 8822.3882 | -2.80 | 46.68 | 43.88 | 74.00 | 30.12 | Pass | H | PK |
| 5 | 12150.61 | 0.55 | 45.20 | 45.75 | 74.00 | 28.25 | Pass | H | PK |
| 6 | 14278.7519 | 6.54 | 41.85 | 48.39 | 74.00 | 25.61 | Pass | H | PK |
| 7 | 3199.0133 | -18.50 | 57.38 | 38.88 | 74.00 | 35.12 | Pass | V | PK |
| 8 | 4960.1307 | -13.35 | 51.51 | 38.16 | 74.00 | 35.84 | Pass | V | PK |
| 9 | 5766.1844 | -11.54 | 49.26 | 37.72 | 74.00 | 36.28 | Pass | V | PK |
| 10 | 7837.3225 | -3.96 | 46.89 | 42.93 | 74.00 | 31.07 | Pass | V | PK |
| 11 | 9503.4336 | -0.49 | 44.51 | 44.02 | 74.00 | 29.98 | Pass | V | PK |
| 12 | 13668.7112 | 5.47 | 43.36 | 48.83 | 74.00 | 25.17 | Pass | V | PK |

| Mode: | | | Bluetooth LE 2Mbps GFSK Transmitting | | | Channel: | | 2402 MHz | |
|---|---|---|---|---|---|---|---|---|---|
| NO | Freq. [MHz] | Factor [dB] | Reading [dBμV] | Level [dBμV/m] | Limit [dBμV/m] | Margin [dB] | Result | Polarity | Remark |
| 1 | 3426.0284 | -18.18 | 54.11 | 35.93 | 74.00 | 38.07 | Pass | H | PK |
| 2 | 4804.1203 | -13.44 | 50.45 | 37.01 | 74.00 | 36.99 | Pass | H | PK |
| 3 | 7206.2804 | -7.81 | 48.79 | 40.98 | 74.00 | 33.02 | Pass | H | PK |
| 4 | 9543.4362 | -1.02 | 44.12 | 43.10 | 74.00 | 30.90 | Pass | H | PK |
| 5 | 12102.6068 | 0.28 | 44.93 | 45.21 | 74.00 | 28.79 | Pass | H | PK |
| 6 | 13668.7112 | 5.47 | 43.07 | 48.54 | 74.00 | 25.46 | Pass | H | PK |
| 7 | 3195.013 | -18.52 | 55.76 | 37.24 | 74.00 | 36.76 | Pass | V | PK |
| 8 | 4804.1203 | -13.44 | 55.40 | 41.96 | 74.00 | 32.04 | Pass | V | PK |
| 9 | 7206.2804 | -7.81 | 49.81 | 42.00 | 74.00 | 32.00 | Pass | V | PK |
| 10 | 9477.4318 | -0.67 | 44.06 | 43.39 | 74.00 | 30.61 | Pass | V | PK |
| 11 | 12051.6034 | 0.02 | 45.24 | 45.26 | 74.00 | 28.74 | Pass | V | PK |
| 12 | 14195.7464 | 7.16 | 41.24 | 48.40 | 74.00 | 25.60 | Pass | V | PK |

| Mode: | | | Bluetooth LE 2Mbps GFSK Transmitting | | | Channel: | | 2440 MHz | |
|---|---|---|---|---|---|---|---|---|---|
| NO | Freq. [MHz] | Factor [dB] | Reading [dBμV] | Level [dBμV/m] | Limit [dBμV/m] | Margin [dB] | Result | Polarity | Remark |
| 1 | 3764.0509 | -17.42 | 53.22 | 35.80 | 74.00 | 38.20 | Pass | H | PK |
| 2 | 4781.1187 | -13.50 | 50.32 | 36.82 | 74.00 | 37.18 | Pass | H | PK |
| 3 | 7485.299 | -5.96 | 46.70 | 40.74 | 74.00 | 33.26 | Pass | H | PK |
| 4 | 9484.4323 | -0.59 | 43.81 | 43.22 | 74.00 | 30.78 | Pass | H | PK |
| 5 | 12072.6048 | 0.12 | 44.83 | 44.95 | 74.00 | 29.05 | Pass | H | PK |
| 6 | 13706.7138 | 5.01 | 43.08 | 48.09 | 74.00 | 25.91 | Pass | H | PK |
| 7 | 3197.0131 | -18.51 | 55.34 | 36.83 | 74.00 | 37.17 | Pass | V | PK |
| 8 | 4880.1253 | -13.46 | 54.61 | 41.15 | 74.00 | 32.85 | Pass | V | PK |
| 9 | 7320.288 | -6.72 | 47.00 | 40.28 | 74.00 | 33.72 | Pass | V | PK |
| 10 | 9508.4339 | -0.55 | 44.18 | 43.63 | 74.00 | 30.37 | Pass | V | PK |
| 11 | 10995.533 | 0.26 | 45.33 | 45.59 | 74.00 | 28.41 | Pass | V | PK |
| 12 | 14305.7537 | 6.35 | 41.42 | 47.77 | 74.00 | 26.23 | Pass | V | PK |

| Mode: | | | Bluetooth LE 2Mbps GFSK Transmitting | | | Channel: | | 2480 MHz | |
|---|---|---|---|---|---|---|---|---|---|
| NO | Freq. [MHz] | Factor [dB] | Reading [dBμV] | Level [dBμV/m] | Limit [dBμV/m] | Margin [dB] | Result | Polarity | Remark |
| 1 | 3950.0633 | -16.68 | 53.25 | 36.57 | 74.00 | 37.43 | Pass | H | PK |
| 2 | 4960.1307 | -13.35 | 50.41 | 37.06 | 74.00 | 36.94 | Pass | H | PK |
| 3 | 6228.2152 | -10.10 | 47.44 | 37.34 | 74.00 | 36.66 | Pass | H | PK |
| 4 | 7751.3168 | -4.42 | 46.49 | 42.07 | 74.00 | 31.93 | Pass | H | PK |
| 5 | 10898.5266 | 0.45 | 43.71 | 44.16 | 74.00 | 29.84 | Pass | H | PK |
| 6 | 13704.7136 | 5.02 | 43.59 | 48.61 | 74.00 | 25.39 | Pass | H | PK |
| 7 | 3199.0133 | -18.50 | 56.86 | 38.36 | 74.00 | 35.64 | Pass | V | PK |
| 8 | 4960.1307 | -13.35 | 51.68 | 38.33 | 74.00 | 35.67 | Pass | V | PK |
| 9 | 7440.296 | -6.29 | 47.33 | 41.04 | 74.00 | 32.96 | Pass | V | PK |
| 10 | 7751.3168 | -4.42 | 45.95 | 41.53 | 74.00 | 32.47 | Pass | V | PK |
| 11 | 11694.5796 | -0.18 | 45.16 | 44.98 | 74.00 | 29.02 | Pass | V | PK |
| 12 | 13680.712 | 5.31 | 43.09 | 48.40 | 74.00 | 25.60 | Pass | V | PK |

Remark:

1) The field strength is calculated by adding the Antenna Factor, Cable Factor & Preamplifier. The basic equation with a sample calculation is as follows:
   Final Test Level =Receiver Reading + Antenna Factor + Cable Factor – Preamplifier Factor
2) Scan from 9kHz to 25GHz, the disturbance above 10GHz and below 30MHz was very low. As shown in this section, for frequencies above 1GHz, the field strength limits are based on average limits. However, the peak field strength of any emission shall not exceed the maximum permitted average limits specified above by more than 20 dB under any condition of modulation. So, only the peak measurements were shown in the report.

## Restricted bands:

**Test plot as follows:**

| | | | |
|---|---|---|---|
| Test_Mode | BLE 1M GFSK Transmitting | Test_Frequency | 2402MHz |
| Tset_Engineer | chenjun | Test_Date | 2024/04/23 |
| Remark | \ | | |

**Test Graph**

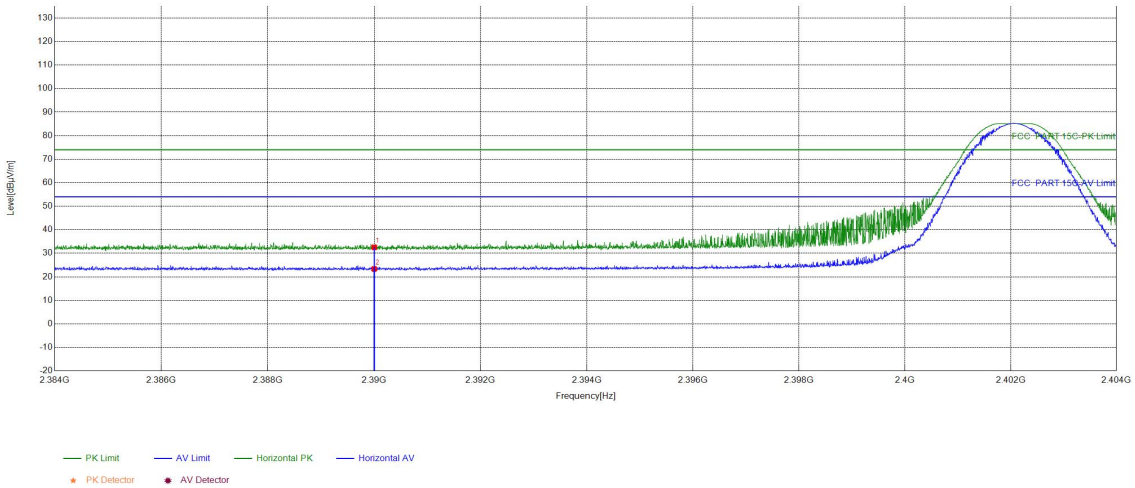


| Suspected List | | | | | | | | | |
|---|---|---|---|---|---|---|---|---|---|
| NO | Freq. [MHz] | Factor [dB] | Reading [dBμV] | Level [dBμV/m] | Limit [dBμV/m] | Margin [dB] | Result | Polarity | Remark |
| 1 | 2390 | -22.26 | 54.82 | 32.56 | 74.00 | 41.44 | PASS | Horizontal | PK |
| 2 | 2390 | -22.26 | 45.59 | 23.33 | 54.00 | 30.67 | PASS | Horizontal | AV |

| | | | |
|---|---|---|---|
| Test_Mode | BLE 1M GFSK Transmitting | Test_Frequency | 2402MHz |
| Tset_Engineer | chenjun | Test_Date | 2024/04/24 |
| Remark | \ | | |

**Test Graph**

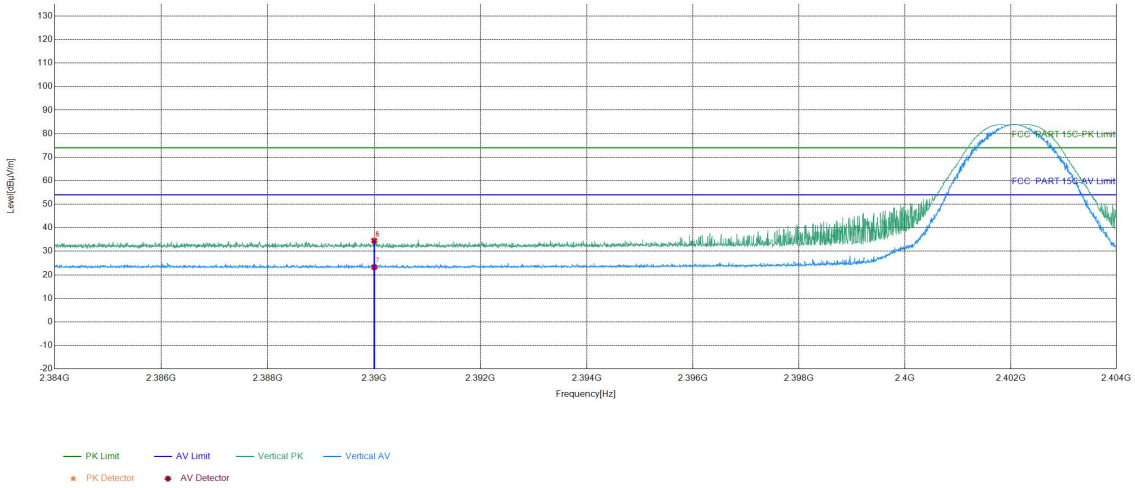


| Suspected List | | | | | | | | | |
|---|---|---|---|---|---|---|---|---|---|
| NO | Freq. [MHz] | Factor [dB] | Reading [dBμV] | Level [dBμV/m] | Limit [dBμV/m] | Margin [dB] | Result | Polarity | Remark |
| 1 | 100 | -22.30 | 54.99 | 32.69 | 54.00 | 21.31 | PASS | Vertical | PK |
| 2 | 200 | -22.30 | 54.99 | 32.69 | 54.00 | 21.31 | PASS | Vertical | PK |
| 3 | 300 | -22.30 | 54.99 | 32.69 | 54.00 | 21.31 | PASS | Vertical | PK |
| 4 | 400 | -22.30 | 54.99 | 32.69 | 54.00 | 21.31 | PASS | Vertical | PK |
| 5 | 2390 | -22.26 | 56.77 | 34.51 | 74.00 | 39.49 | PASS | Vertical | PK |
| 6 | 2390 | -22.26 | 56.77 | 34.51 | 74.00 | 39.49 | PASS | Vertical | PK |
| 7 | 2390 | -22.26 | 45.51 | 23.25 | 54.00 | 30.75 | PASS | Vertical | AV |

| | | | |
|---|---|---|---|
| Test_Mode | BLE 1M GFSK Transmitting | Test_Frequency | 2480MHz |
| Tset_Engineer | chenjun | Test_Date | 2024/04/24 |
| Remark | \ | | |

**Test Graph**

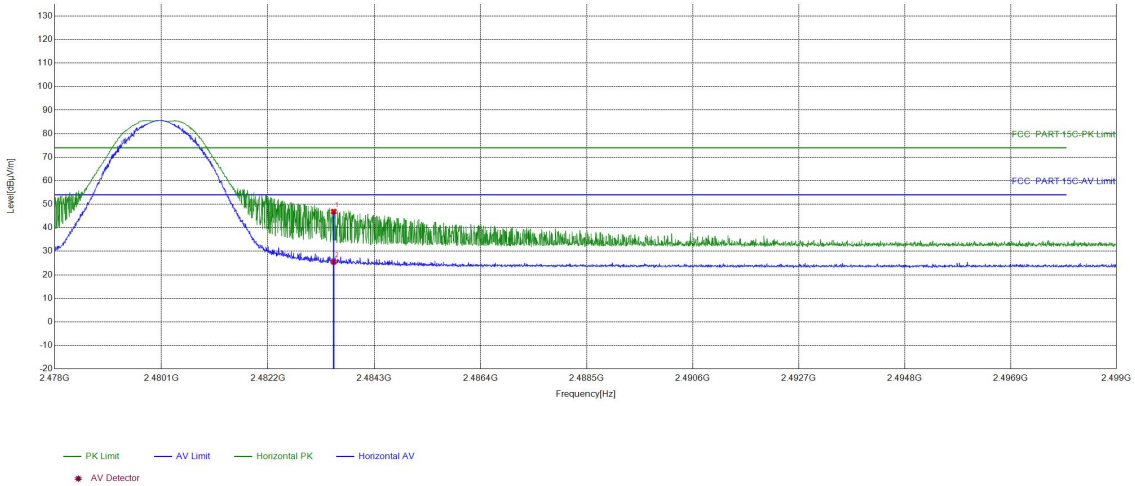


| Suspected List | | | | | | | | | |
|---|---|---|---|---|---|---|---|---|---|
| NO | Freq. [MHz] | Factor [dB] | Reading [dBμV] | Level [dBμV/m] | Limit [dBμV/m] | Margin [dB] | Result | Polarity | Remark |
| 1 | 2483.5 | -21.55 | 68.40 | 46.85 | 74.00 | 27.15 | PASS | Horizontal | PK |
| 2 | 2483.5 | -21.55 | 47.06 | 25.51 | 54.00 | 28.49 | PASS | Horizontal | AV |

| | | | |
|---|---|---|---|
| Test_Mode | BLE 1M GFSK Transmitting | Test_Frequency | 2480MHz |
| Tset_Engineer | chenjun | Test_Date | 2024/04/24 |
| Remark | \ | | |

**Test Graph**

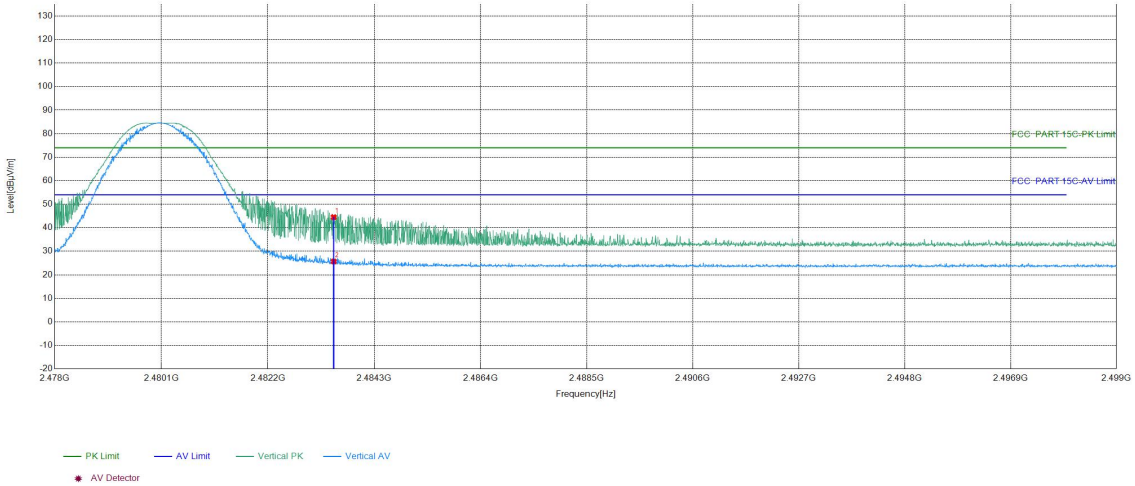


| Suspected List | | | | | | | | | |
|---|---|---|---|---|---|---|---|---|---|
| NO | Freq. [MHz] | Factor [dB] | Reading [dBμV] | Level [dBμV/m] | Limit [dBμV/m] | Margin [dB] | Result | Polarity | Remark |
| 1 | 2483.5 | -21.55 | 66.05 | 44.50 | 74.00 | 29.50 | PASS | Vertical | PK |
| 2 | 2483.5 | -21.55 | 47.21 | 25.66 | 54.00 | 28.34 | PASS | Vertical | AV |

| | | | |
|---|---|---|---|
| Test_Mode | BLE 2M GFSK Transmitting | Test_Frequency | 2402MHz |
| Tset_Engineer | chenjun | Test_Date | 2024/04/24 |
| Remark | \ | | |

**Test Graph**

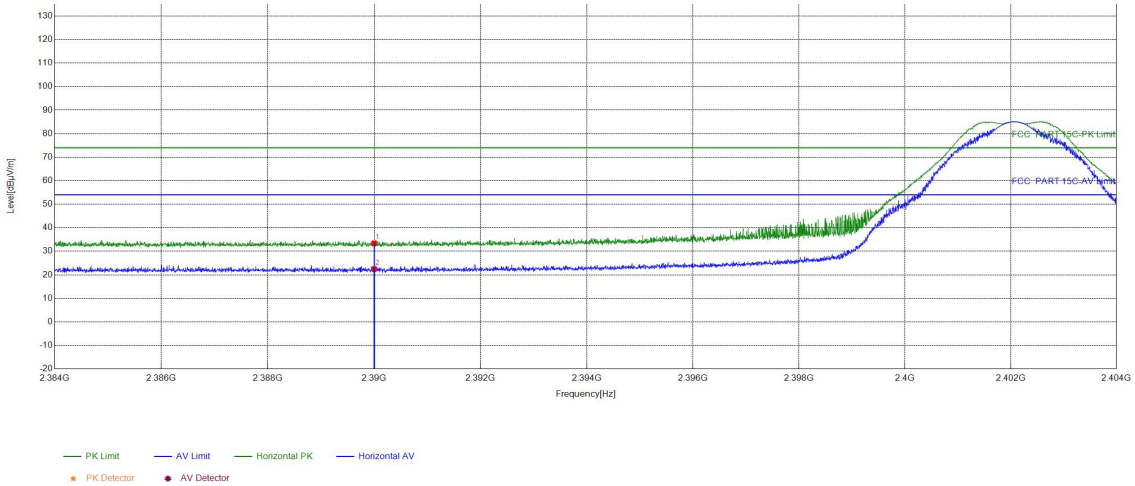


| Suspected List | | | | | | | | | |
|---|---|---|---|---|---|---|---|---|---|
| NO | Freq. [MHz] | Factor [dB] | Reading [dBμV] | Level [dBμV/m] | Limit [dBμV/m] | Margin [dB] | Result | Polarity | Remark |
| 1 | 2390 | -22.26 | 55.65 | 33.39 | 74.00 | 40.61 | PASS | Horizontal | PK |
| 2 | 2390 | -22.26 | 44.69 | 22.43 | 54.00 | 31.57 | PASS | Horizontal | AV |

| | | | |
|---|---|---|---|
| Test_Mode | BLE 2M GFSK Transmitting | Test_Frequency | 2402MHz |
| Tset_Engineer | chenjun | Test_Date | 2024/04/24 |
| Remark | \ | | |

**Test Graph**

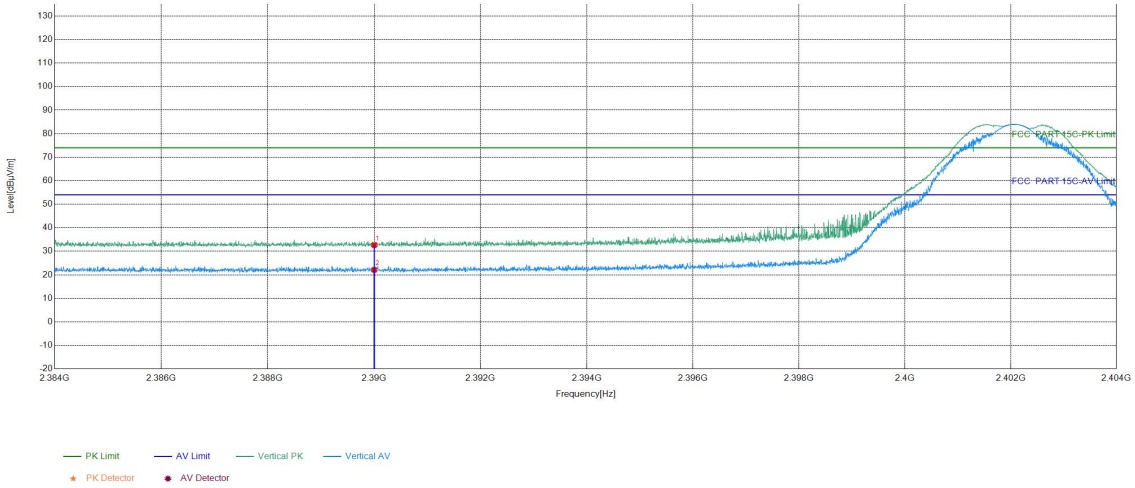


| Suspected List | | | | | | | | | |
|---|---|---|---|---|---|---|---|---|---|
| NO | Freq. [MHz] | Factor [dB] | Reading [dBμV] | Level [dBμV/m] | Limit [dBμV/m] | Margin [dB] | Result | Polarity | Remark |
| 1 | 2390 | -22.26 | 54.90 | 32.64 | 74.00 | 41.36 | PASS | Vertical | PK |
| 2 | 2390 | -22.26 | 44.36 | 22.10 | 54.00 | 31.90 | PASS | Vertical | AV |

| | | | |
|---|---|---|---|
| Test_Mode | BLE 2M GFSK Transmitting | Test_Frequency | 2480MHz |
| Tset_Engineer | chenjun | Test_Date | 2024/04/24 |
| Remark | \ | | |

**Test Graph**

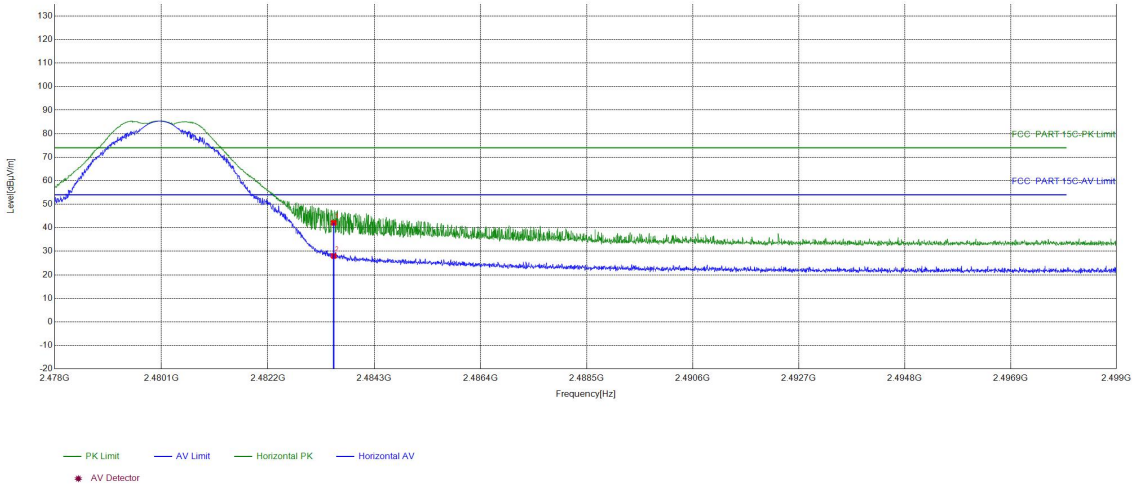


| Suspected List | | | | | | | | | |
|---|---|---|---|---|---|---|---|---|---|
| NO | Freq. [MHz] | Factor [dB] | Reading [dBμV] | Level [dBμV/m] | Limit [dBμV/m] | Margin [dB] | Result | Polarity | Remark |
| 1 | 2483.5 | -21.55 | 63.65 | 42.10 | 74.00 | 31.90 | PASS | Horizontal | PK |
| 2 | 2483.5 | -21.55 | 49.54 | 27.99 | 54.00 | 26.01 | PASS | Horizontal | AV |

| | | | |
|---|---|---|---|
| Test_Mode | BLE 2M GFSK Transmitting | Test_Frequency | 2480MHz |
| Tset_Engineer | chenjun | Test_Date | 2024/04/24 |
| Remark | \ | | |

**Test Graph**

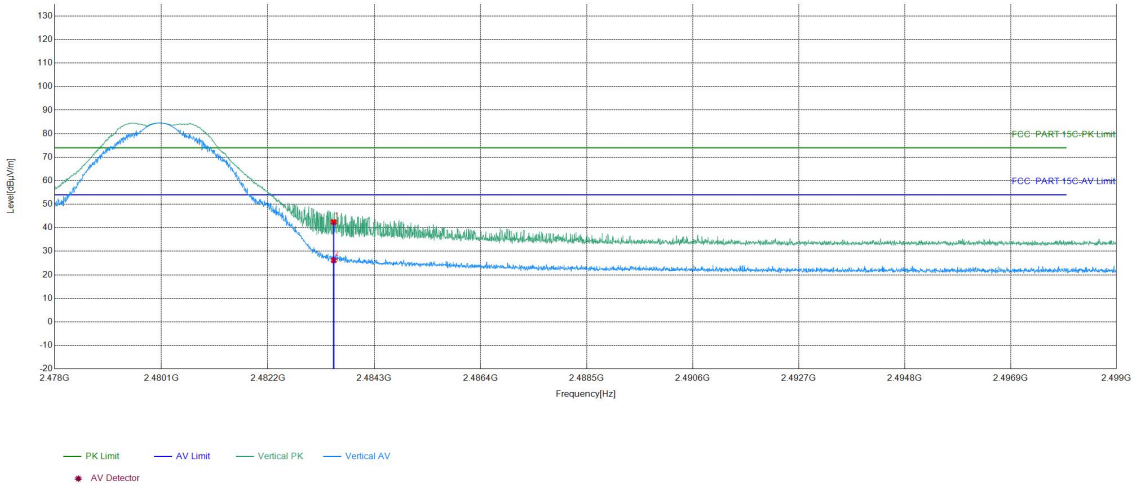


| Suspected List | | | | | | | | | |
|---|---|---|---|---|---|---|---|---|---|
| NO | Freq. [MHz] | Factor [dB] | Reading [dBμV] | Level [dBμV/m] | Limit [dBμV/m] | Margin [dB] | Result | Polarity | Remark |
| 1 | 2483.5 | -21.55 | 63.95 | 42.40 | 74.00 | 31.60 | PASS | Vertical | PK |
| 2 | 2483.5 | -21.55 | 47.73 | 26.18 | 54.00 | 27.82 | PASS | Vertical | AV |

Note:
The field strength is calculated by adding the Antenna Factor, Cable Factor & Preamplifier. The basic equation with a sample calculation is as follows:
Final Test Level =Receiver Reading -Correct Factor
Correct Factor = Preamplifier Factor– Antenna Factor–Cable Factor

# 6 Appendix A

Refer to Appendix: Bluetooth LE of EED32Q81090101