PV Inverter With Energy Storage

SUN-3.6K-SG01LP1-US SUN-3.6K-SG01LP1-US-B
SUN-5K-SG01LP1-US SUN-5K-SG01LP1-US-B
SUN-6K-SG01LP1-US SUN-6K-SG01LP1-US-B
SUN-7.6K-SG01LP1-US SUN-7.6K-SG01LP1-US-B
SUN-8K-SG01LP1-US SUN-8K-SG01LP1-US-B

User Manual

Contents

1. Safety Introductions 01
2. Product instructions 01-04
2.1 Product Overview
2.2 Product Features
2.3 Basic System Architecture
3. Installation 04-18
3.1 Parts list
3.2 Mounting instructions
3.3 Battery connection
3.4 AC Input/Output Connection
3.5 PV Connection
3.6 CT Connection
3.7 Earth Connection(mandatory)
3.8 WIFI Connection
3.9 Wiring System for Inverter(Region:EU)
4. OPERATION 19
4.1 Power ON/OFF
4.2 Operation and Display Panel
5. LCD Display Icons 20-29
5.1 Main Screen
5.2 Solar Power Curve
5.3 Curve Page-Solar & Load & Grid
5.4 System Setup Menu
5.5 Basic Setup Menu
5.6 Battery Setup Menu
5.7 System Work Mode Setup Menu

5.8 Grid Setup Menu
5.9 Generator Port Use Setup Menu
5.10 Advanced Function Setup Menu
5.11 Device Info Setup Menu
6. Mode 29-31
7. Fault information and processing 31-34
8. Limitation of Liability 35
9. Datasheet 35-36

1. Safety Introductions

- This chapter contains important safety and operating instructions. Read and keep this manual for future reference.
- Before using the inverter, please read the instructions and warning signs of the battery and corresponding sections in the instruction manual.
- Do not disassemble the inverter. If you need maintenance or repair, take it to a professional service center.
- Improper reassembly may result in electric shock or fire.
- To reduce risk of electric shock, disconnect all wires before attempting any maintenance or cleaning. Turning off the unit will not reduce this risk.
- Caution: Only qualified personnel can install this device with battery.
- Never charge a frozen battery.
- For optimum operation of this inverter, please follow required specification to select appropriate cable size.It is very important to correctly operate this inverter.
- Be very cautious when working with metal tools on or around batteries. Dropping a tool may cause a spark or short circuit in batteries or other electrical parts,even cause an explosion.
- Please strictly follow installation procedure when you want to disconnect AC or DC terminals. Please refer to ” Installation” section of this manual for the details.
- Grounding instructions - this inverter should be connected to a permanent grounded wiring system. Be sure to comply with local requirements and regulation to install this inverter.
- Never cause AC output and DC input short circuited. Do not connect to the mains when DC input short circuits.

2. Product Introduction

This is a multifunctional inverter,combining functions of inverter, solar charger and battery charger to offer uninterruptible power support with portable size. Its comprehensive LCD display offers user configurable and easy accessible button operation such as battery charging ,AC/solar charging, and acceptable input voltage based on different applications.

2.1 Product Overview

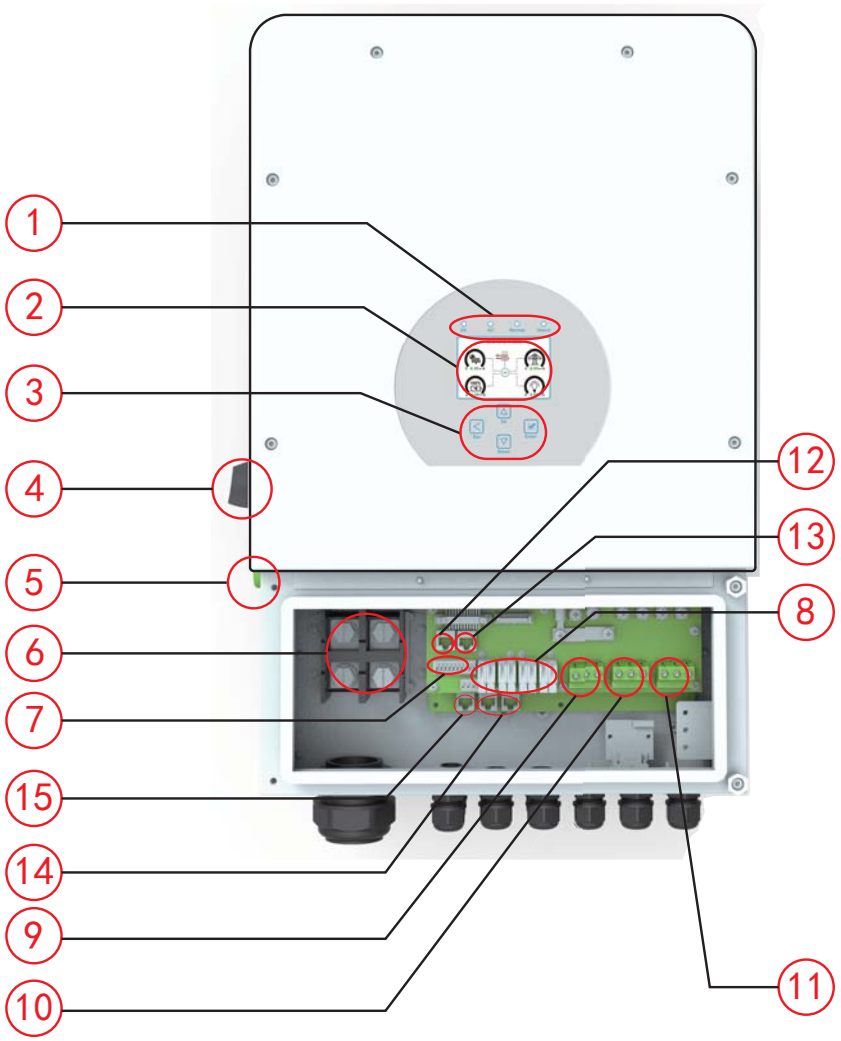

1: Inverter Indicators
2: LCD display
3: Function Buttons
4: DC Switch
5: Power on/off button
6: Battery input connectors
7: Function Port
8: PV input with two MPPT
9: Grid
10: Generator input
11: Load
12: RS 485 Port
13: CAN Port
14: Parallel port
15: Parallel Box(master)

2.2 Product Features

- -220V Single phase,120V/240V Split phase Pure sine wave inverter.
- - Self-consumption and feed-in to the grid.
- - Auto restart while AC is recovering.
- - Programmable supply priority for battery or grid.
- - Programmable multiple operation modes:On grid,off grid and UPS.
- - Configurable battery charging current/voltage based on applications by LCD setting.
- - Configurable AC/Solar/Generator Charger priority by LCD setting.
- - Compatible with mains voltage or generator power.
- - Overload/over temperature/short circuit protection.
- - Smart battery charger design for optimized battery performance
- - With limit function,prevent excess power overflow to the grid.
- - Supporting WIFI monitoring and build-in 2 strings of MPP trackers
- -Smart settable three stages MPPT charging for optimized battery performance.
- -Time of use function.
- -Smart Load Function.

2.3 Basic System Architecture

The following illustration shows basic application of this inverter.

It also includes following devices to have a Complete running system.

- Generator or Utility
- PV modules

Consult with your system integrator for other possible system architectures depending on your requirements.

This inverter can power all kinds of appliances in home or office environment, including motor type appliances such as refrigerator and air conditioner.

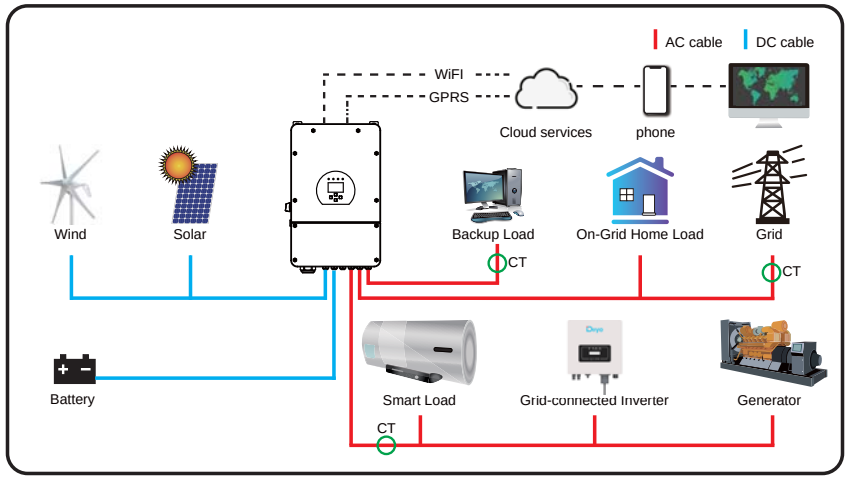

3. Installation

3.1 Parts List

Check the equipment before installation. Please make sure nothing is damaged in the package. You should have received the items in the following package:

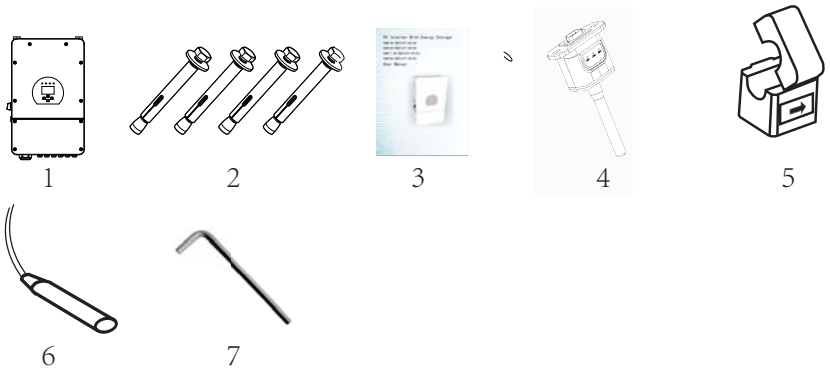

No	Description	Qty
1	SUN-3.6/5/6/7.6K/8K-SG01LP1-US hybrid inverter	1
2	Stainless steel expansion bolts M8*80	4
3	User manual	1
4	WiFi plug	1

5	Current transformer (Optional)	2
6	Battery sensor	1
7	L-type Hexagon wrench	1

Chart 3-1 Parts List

3.2 Mounting instructions

Installation Precaution

This Hybrid inverter is designed for outdoor use(IP65),Please make sure the installation site meets below conditions:

- Not in direct sunlight
- Not in areas where highly flammable materials are stored.
- Not in potential explosive areas.
- Not in the cool air directly.
- Not near the television Antenna or antenna cable.
- Not higher than altitude of about 2000 meters above sea level.
- Not in environment of precipitation or humidity(>95%)

Please AVOID direct sunlight, rain exposure, snow laying up during installation and operation. Before connecting all wires,please take off the metal cover by removing screws as shown below:

Considering the following points before selecting where to install:

- Please select a vertical wall with load-bearing capacity for installation, suitable for installation on concrete or other non-flammable surfaces,installation is shown below.
- Install this inverter at eye level in order to allow the LCD display to be read at all times.

- The ambient temperature should be between -25~60℃ to ensure optimal operation.
- Be sure to keep other objects and surfaces as shown in the diagram to guarantee sufficient heat dissipation and have enough space for removing wires.

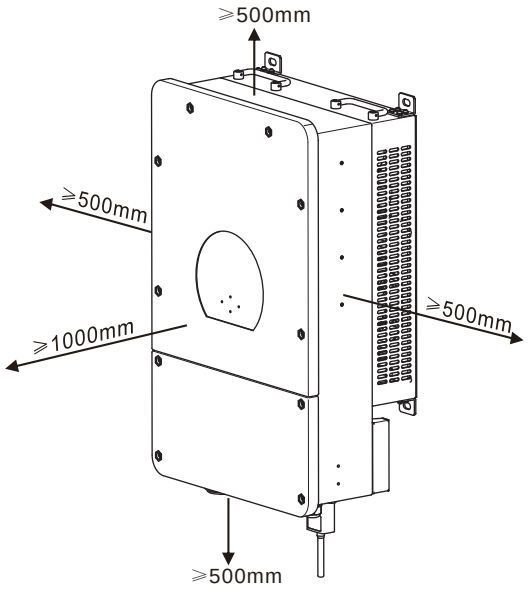

For proper air circulation to dissipate heat, allow a clearance of approx. 50cm to the side and approx.50cm above and below the unit.And 100cm to the front.

Mounting the inverter

Remember that this inverter is heavy!Please be careful when lifting out from the package. Choose the recommend drill head(as shown in below pic) to drill 4 holes on the wall, 52-60mm deep.

1. Use a proper hammer to fit the expansion bolt into the holes.
2. Carry the inverter and holding it,make sure the hanger aim at the expansion bolt,fix the inverter on the wall.
3. Fasten the screw head of the expansion bolt to finish the mounting.

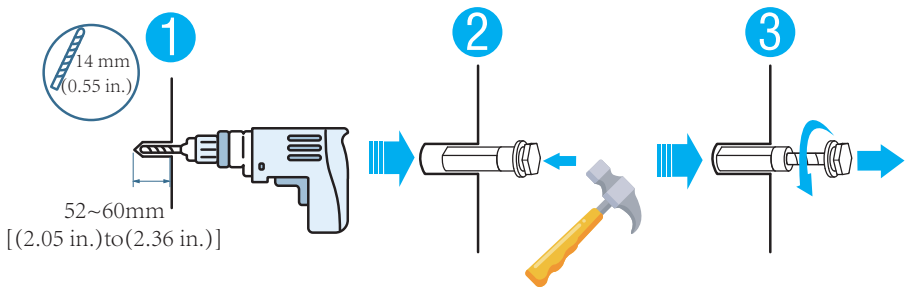

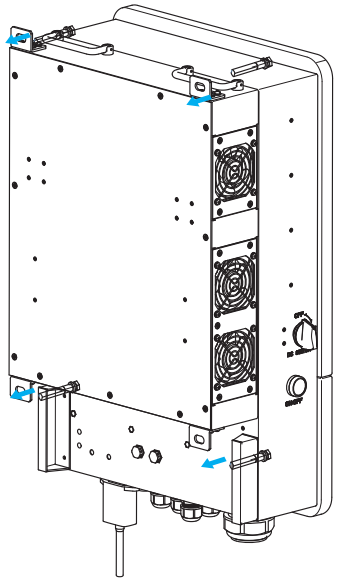

3.3 Battery connection

For safe operation and compliance, a separate DC over-current protector or disconnect device is required between the battery and the inverter. In some applications, switching devices may not be required but over-current protectors are still required. Refer to the typical amperage in the table below for the required fuse or circuit breaker size.

Model	Wire Size	Cable(mm^2)	Torque value (max)
3.6/5/6/7.6/8KW	2AWG	35	24.5Nm

Chart 3-2 Cable size

All wiring must be performed by a professional person.

Connecting the battery with a suitable cable is important for safe and efficient operation of the system. To reduce the risk of injury, refer to Chart 3-2 for recommended cables.

Please follow below steps to implement battery connection:

1. Please choose a suitable battery cable with correct connector which can well fit into the battery terminals. 2. Use a suitable screwdriver to unscrew the bolts and fit the battery connectors in,then fasten the bolt by the screwdriver,make sure the bolts are tightened with torque of 24.5 N.M.
2. Nm in clockwise direction,make sure polarity at both the battery and inverter is correctly connected.

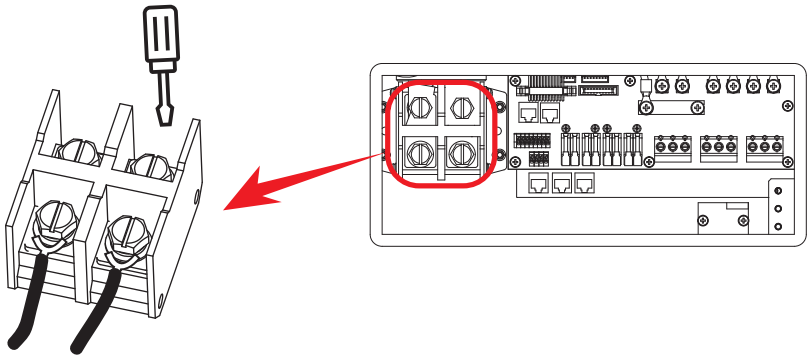

3. In case of children touch or insects go into the inverter,Please make sure the inverter connector is fasten to waterproof position by twist it clockwise.

Installation must be performed with care.

Before making the final DC connection or closing DC breaker/disconnect, be sure positive(+) must be connect to positive(+) and negative(-) must be connected to negative(-). Reverse palarity connection on battery will damage the inverter.

3.3.2 Battery temperature connection

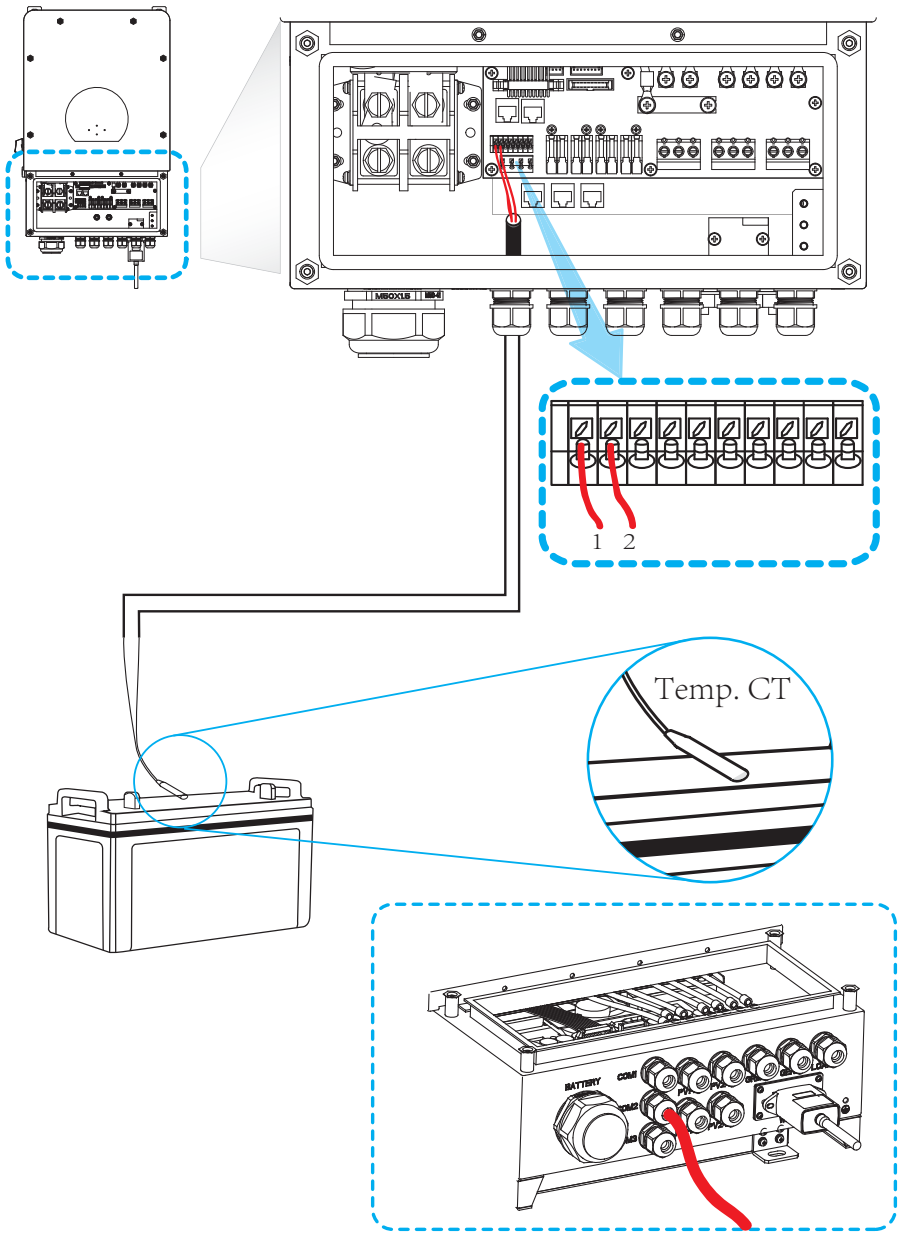

3.4 AC Input/Output Connection

· Before connecting to AC input power source,please install a separate AC breaker between inverter and AC input power source.This will ensure the inverter can be securely disconnected during maintenance and fully protected from over current of AC input.The recommended of AC breaker is 50A for 5kw and 80A for 8KW.

· There are three terminal blocks with "Grid" "Load" and "GEN" markings.Please do not misconnect input and output connectors.

All wiring must be performed by a qualified personnel.It is very important for system safety and efficient operation to use appropriate cable for AC input connection. To reduce risk of injury,please use the proper recommended cable as below.

Model	Gauge	Cable(mm^2)	Torque value
3.6/5/6KW	8AWG	8	1.2Nm
7.6/8KW	6AWG	13	1.2Nm

Chart 3-3 Recommended Size for AC wires

Please follow below steps to implement AC input/output connection:

1. Before making AC input/output connection,be sure to open DC protector or disconnector first.
2. Remove insulation sleeve 10mm length,unscrew the bolts,insert the AC input wires according to polarities indicated on the terminal block and tighten the terminal screws. Make sure the connection is complete.

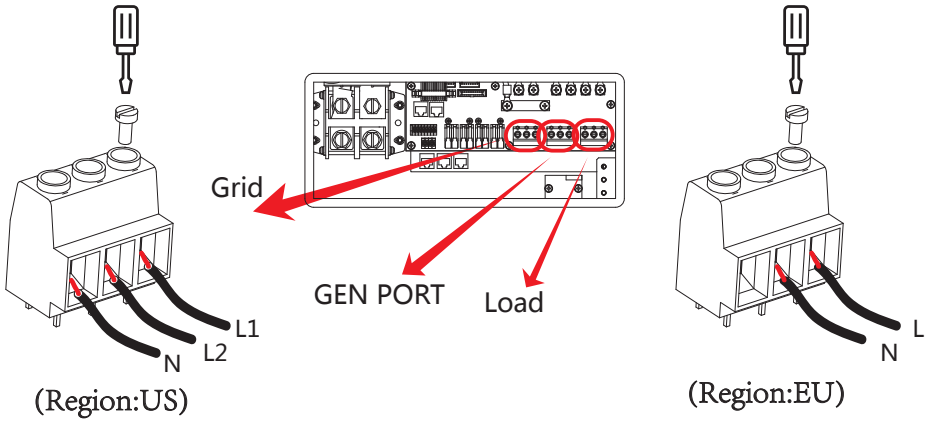

Be sure that AC power source is disconnected before attempting to wire it to the unit.

3. Then,insert AC output wires according to polarities indicated on the terminal block and tighten terminal. Be sure to connect corresponding N wires and PE wires to related terminals as well.
4. Make sure the wires are securely connected.
5. Appliances such as air conditioner are required at least 2-3 minutes to restart because it is required to have enough time to balance refrigerant gas inside of circuit.If a power shortage occurs and recovers in short time,it will cause damage to your connected appliances.To prevent this kind of damage,please check manufacturer of air conditioner if it is equipped with time-delay function before installation.Otherwise,this inverter will trigger overload fault and cut off output to protect your appliance but sometimes it still causes internal damage to the air conditioner

3.5 PV Connection

Before connecting to PV modules,please install a separately DC circuit breaker between inverter and PV modules.It is very important for system safety and efficient operation to use appropriate cable for PV module connection.To reduce risk of injury,please use the proper recommended cable size as below.

Model	Wire Size	Cable(mm^2)	Torque value (max)
3.6/5/6/7.6/8KW	1X12AWG	4	1.2Nm

Chart 3-2 Cable size

To avoid any malfunction, do not connect any PV modules with possible current leakage to the inverter. For example, grounded PV modules will cause current leakage to the inverter. When using PV modules, please be sure NO grounding.

It is requested to use PV junction box with surge protection. Otherwise,it will cause damage on inverter when lightning occurs on PV modules.

3.5.1 PV Module Selection:

When selecting proper PV modules, please be sure to consider below parameters:
1) Open circuit Voltage (Voc) of PV modules not exceeds max. PV array open circuit voltage of inverter.
2) Open circuit Voltage (Voc) of PV modules should be higher than min. start voltage.

Inverter Model	6KW	7.6KW	8KW
Max.PV Array Open Circuit Voltage	500Vdc		
PV Array MPPT Voltage Range	125Vdc-425Vdc		
No. of MPP Trackers	2		
No. of Strings per MPP Tracker	2+1	2+2	2+2

Chart 3-5

3.5.2 PV Module Wire Connection:

Please follow below steps to implement PV module connection:
1. Remove insulation sleeve 10 mm for positive and negative conductors.
2. Suggest to put bootlace ferrules on the end of positive and negative wires with a proper crimping tool.
3. Check correct polarity of wire connection from PV modules and PV input connectors. Then, connect positive pole (+) of connection wire to positive pole (+) of PV input connector. Connect negative pole (-) of connection wire to negative pole(-)of PV input connector.Close the switch and make sure the wires are tightly fixed.

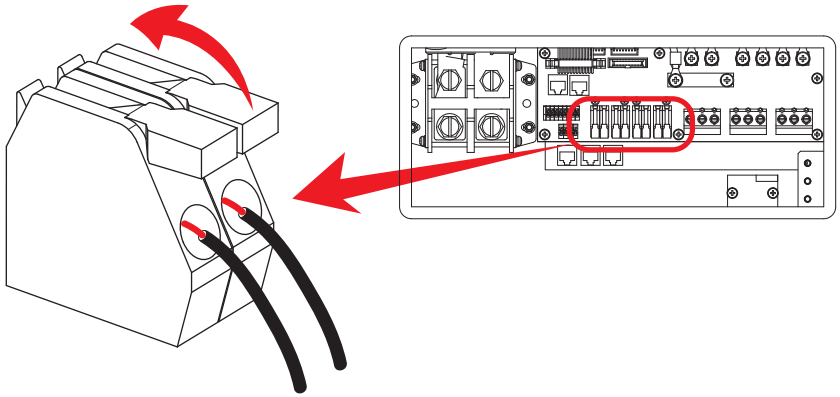

3.6 CT Connection (Region:EU)

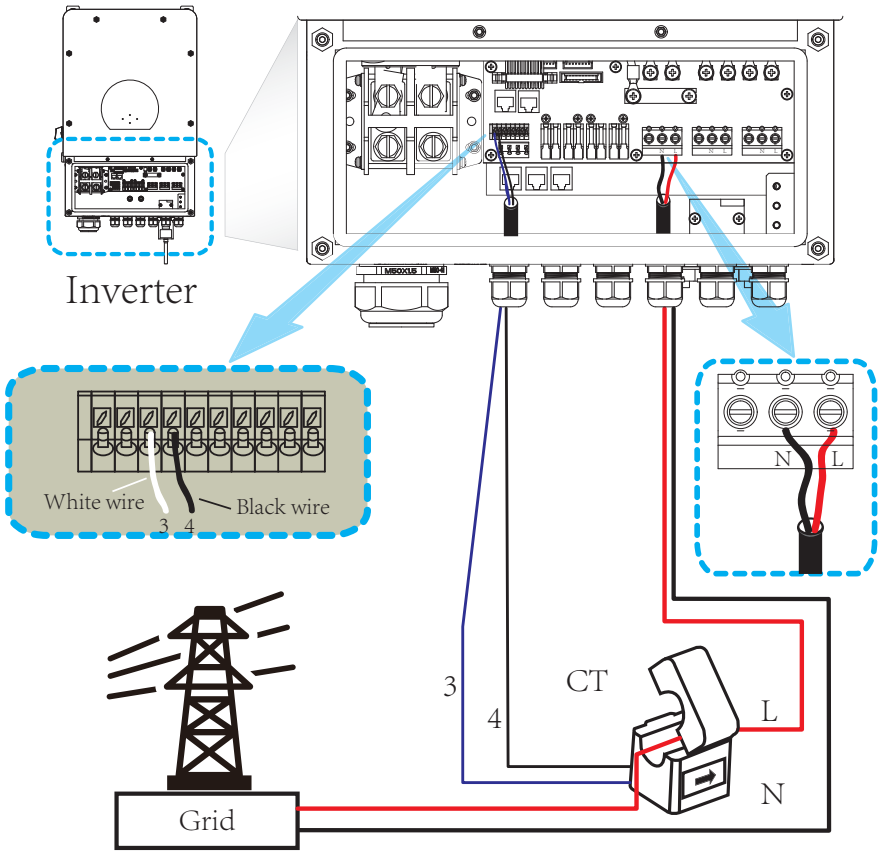

3.7 Earth Connection(mandatory)

Ground cable shall be connecred to ground plate on grid side this prevents electric shock. if the original protective conductor fails.

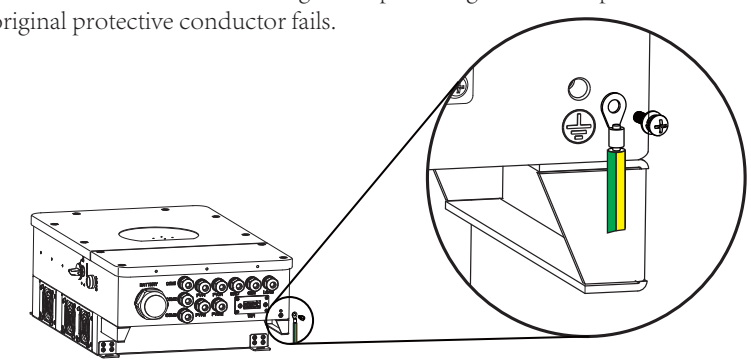

(Region:US)

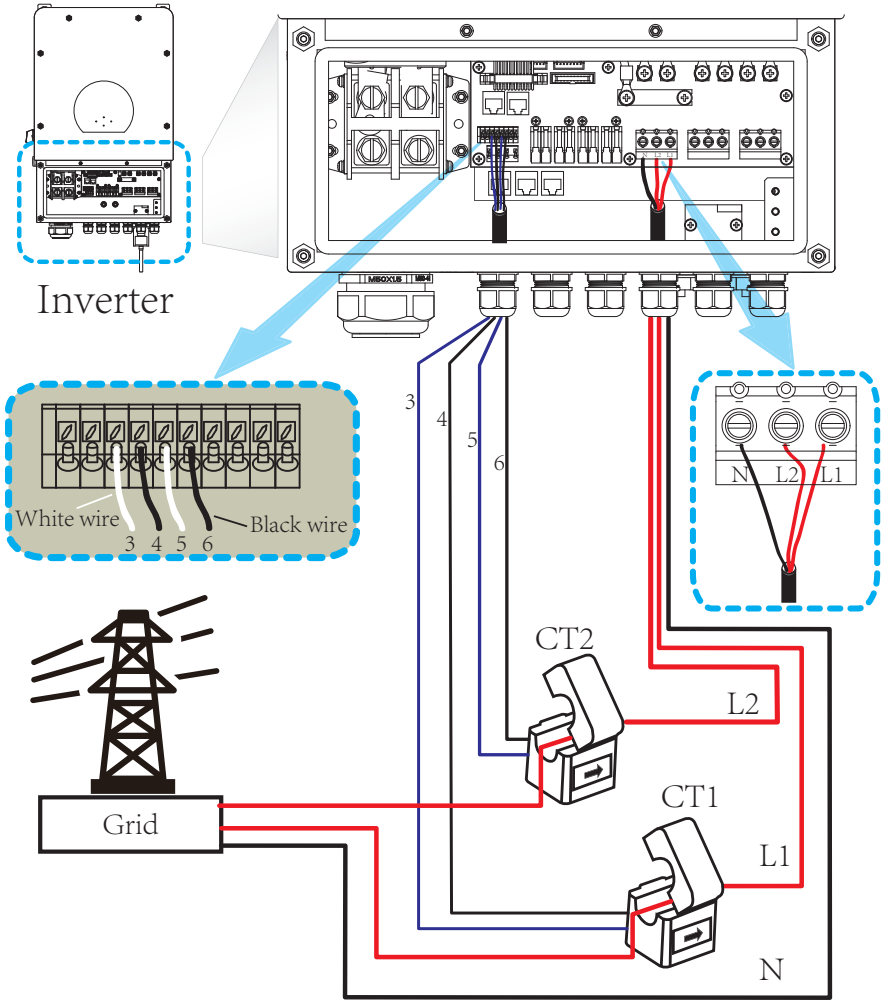

Note:

When the inverter is in the off-grid state, the N line needs to be connected to the earth.

3.8 WIFI Connection

For the configuration of Wi-Fi Plug,please refer to illustrations of the Wi-Fi Plug.

3.9 Wiring System for Inverter (Region:EU)

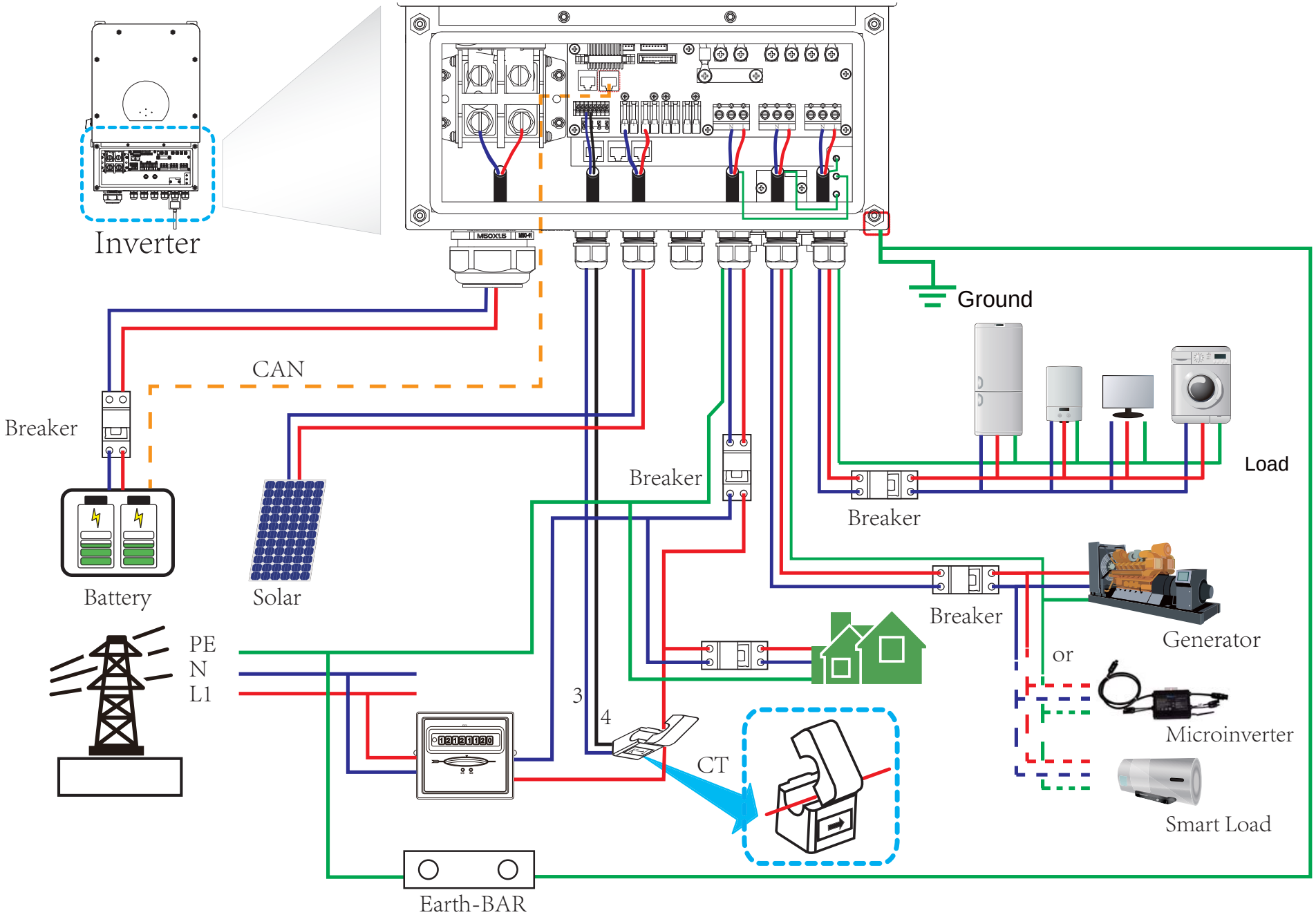

(Region:US)

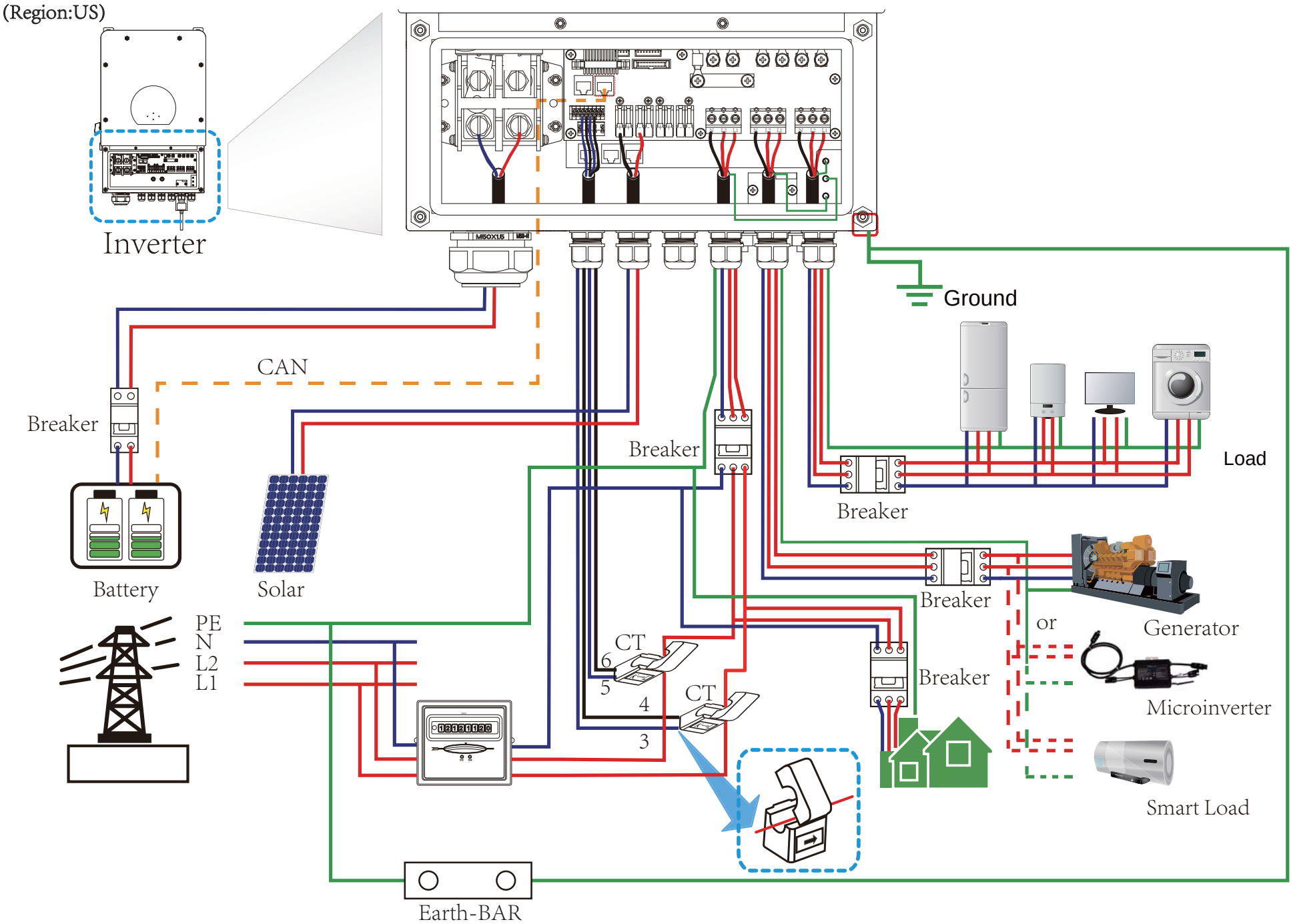
Inverter
Ground
CAN
Breaker
Battery
Solar
Breaker
Breaker
Load
Breaker
Generator
or
Microinverter
Smart Load
PE
N
L2
L1
CT
6
5
4
3
CT
Breaker
Earth-BAR

4. OPERATION

4.1 Power ON/OFF

Once the unit has been properly installed and the batteries are connected well,simply press On/Off button(located on the left side of the case) to turn on the unit.When system without battery connected,but connect with either PV or grid,and ON/OFF button is switched off,LCD will still light up(Display will show OFF),In this condition,when switch on ON/OFF button and select NO battery,system can still working.

4.2 Operation and Display Panel

The operation and display panel,shown in below chart,is on the front panel of the inverter.It includes four indicators,four function keys and a LCD display,indicating the operating status and input/output power information.

LED Indicator		Messages
DC	Green led solid light	PV Connection normal
AC	Green led solid light	Grid Connection normal
Normal	Green led solid light	Inverter operating normal
Alarm	Red led solid light	Malfunction or warning

Chart 4-1 LED indicators

Function Key	Description
Esc	To exit setting mode
Up	To go to previous selection
Down	To go to next selection
Enter	To confirm the selection

Chart 4-2 Function Buttons

5. LCD Display Icons

5.1 Main Screen

The LCD is touchscreen,below screen shows the overall information of the inverter.

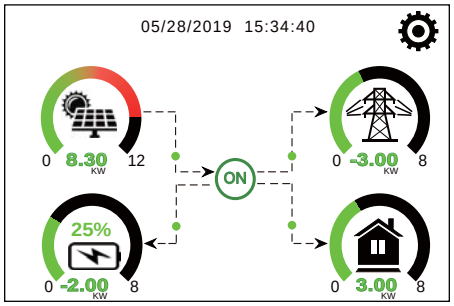

1.The icon in the center of the home screen indicates that the system is Normal operation. If it turns into “comm./F01~F64” ,it means the inverter has communication errors or other errors,the error message will display under this icon(F01-F64 errors,detail error info can be viewed in the System Alarms menu).

2.At the top of the screen is the time.

3.System Setup Icon,Press this set button,you can enter intothe system setup screen which including Basic Setup,Battery Setup,Grid Setup,System Work Mode,Generator port use, Advanced function and Li-Batt info.

4.The main screen showing the info including Solar,Grid,Load and Battery.Its also displaying the energy flow direction by arrow.When the power is approximate to high level, the color on the panels will changing from green to red so system info showing vividly on the main screen.

- PV power and Load power always keep positive.
- Grid power negative means sell to grid,positive means get from grid.
- Battery power negative means charge,positive means discharge.

5.1.1 LCD operation flow chart

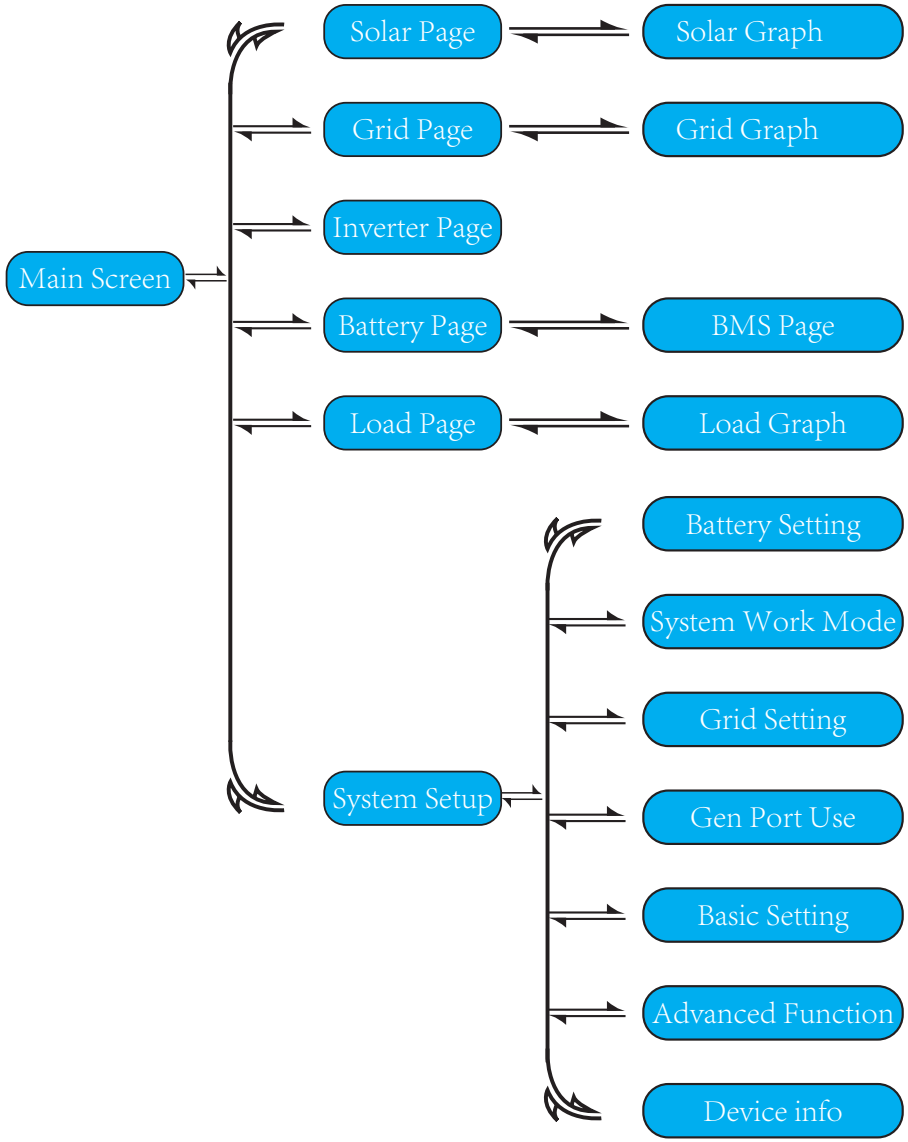

5.2 Solar Power Curve

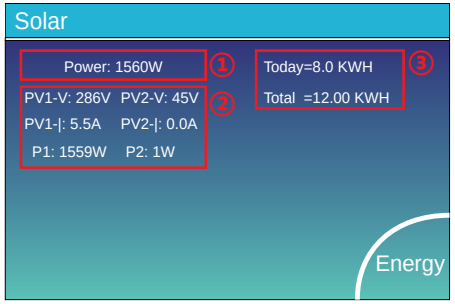

This is Solar Panel detail page.

① Solar Panel Generation.
② Voltage,Current,Power for each MPPT.
③ Solar Panel energy for Day and Total.

Press the "Energy "button will enter into the power curve page.

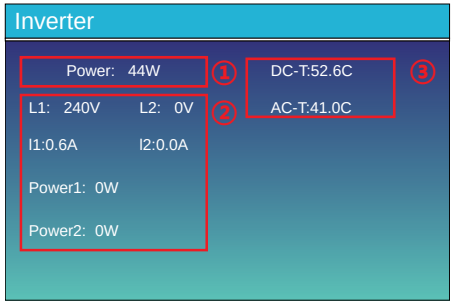

This is Inverter detail page.

① Inverter Generation.
② Voltage,Current,Power for each Phase.
③ DC-T:mean DC-DC temperature,
AC-T:mean Heat-sink temperature.

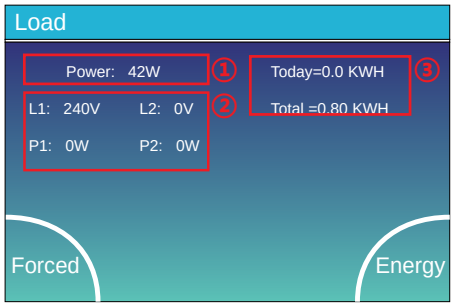

This is Back-up Load detail page.

① Back-up Power.
② Voltage,Power for each Phase.
③ Back-up consumption for Day and Total.

Press the "Energy "button will enter into the power curve page.

Press the "Forced "button will forced open the smart-load(While GEN PORT utilized as Smart-load output).

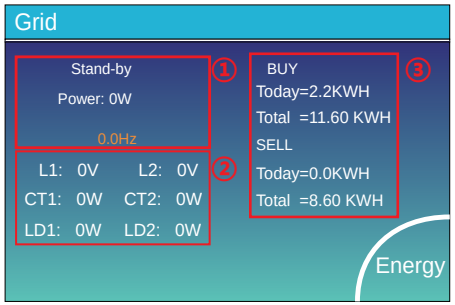

This is Grid detail page.

① Status,Power,Frequency.
② L1&L2:Voltage for each Phase
CT1&CT2:External Current Sensor Power
LD1&LD2:Internal Current Sensor Power.
③ BUY:Energy from Grid to Inverter,
SELL:Energy from Inverter to Load.

Press the "Energy "button will enter into the power curve page.

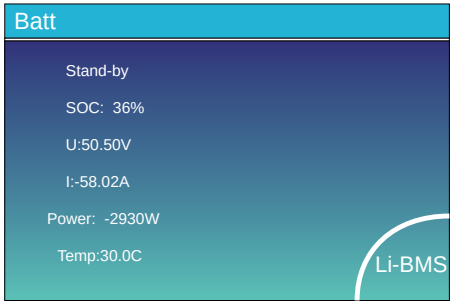

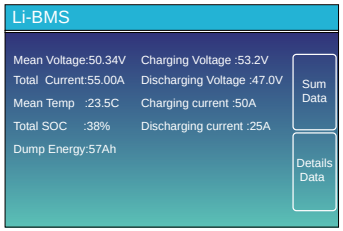

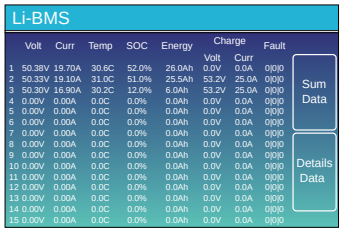

This is Battery detail page.

if you use Lithium Battery,you can enter BMS page.

5.3 Curve Page-Solar & Load & Grid

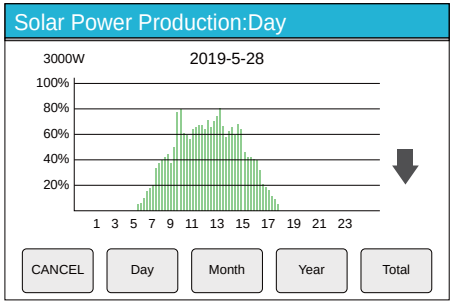

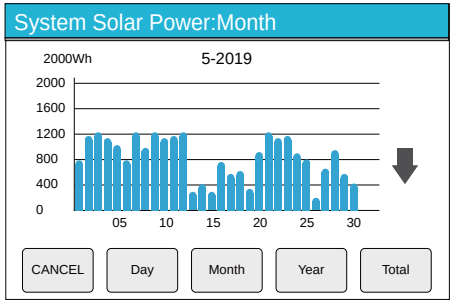

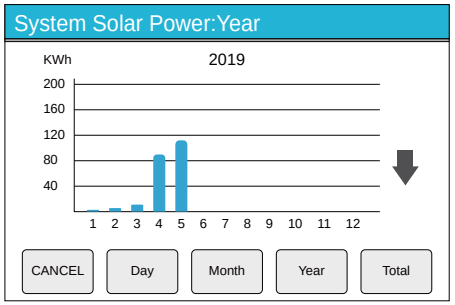

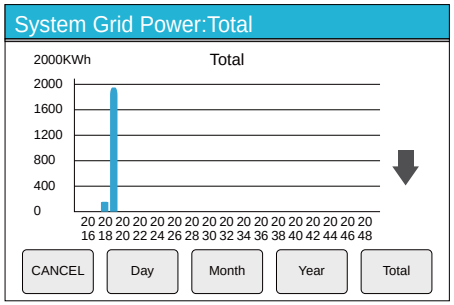

Solar power curve for daily,monthly,yearly and total can be roughly checked on the LCD, For more accuracy power generation,pls check on the monitoring system.Click the up and down arrow to check power curve of different period.

5.4 System Setup Menu

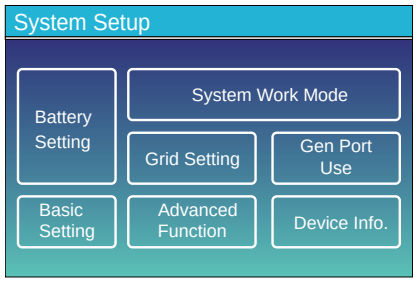

This is System Setup page.

5.5 Basic Setup Menu

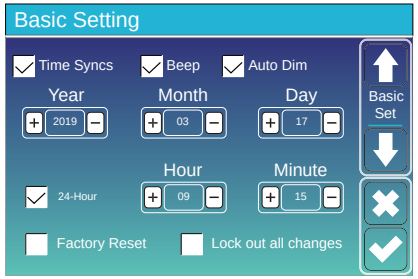

This is Basic Setup page.

5.6 Battery Setup Menu

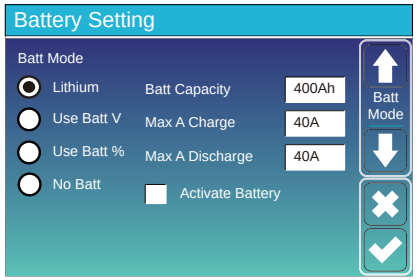

Lithium Battery

Batt Mode-------- Lithium
Max A charge-------- 0-185A
Max A Discharge-----0-185A
Activate Battery------Enable

AGM Battery

Batt Mode-------- Use Batt V or Use Batt V%
Batt Capacity-------- 50-2000Ah
Max A charge-------- 0-185A
Max A Discharge-----0-185A
Activate Battery ------Enable

No Batt --- No need to set other parameters, keep the default value.

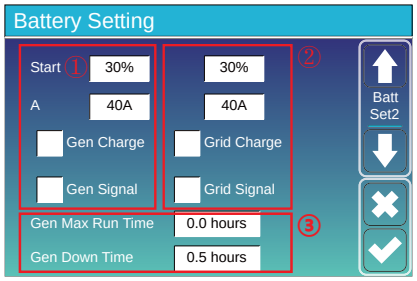

This is Battery Setup page.①③

Start =30%---It indicates that the Generator will start when the Battery capacity is less than 30% in the condition of Off-grid mode.

A = 40A---It indicates the Current that the Generator charges the Battery after started.

Gen Charge---The Switch that the Generator charges the Battery.

Gen Signal ---It indicates whether the Generator's ATS signal is on.

Max RunTime(x.xhous)Indicates that the generator is the longest in a day,The time x.xhours can be run, and the generator will be turned off when the time is up. 24.0hours (default) means that It keeps running without shutting down.

DownTime(x.xhours)It indicates the delay of the Generator to shut down after it has reached the run time.

This is Grid Charge, you need select. ②

Start =30%---no use, for customization.

A = 40A--- It indicates the Current that the Grid charges the Battery.

Grid Charge---The Switch that the Generator charges the Battery.

Grid Signal ---Disable.

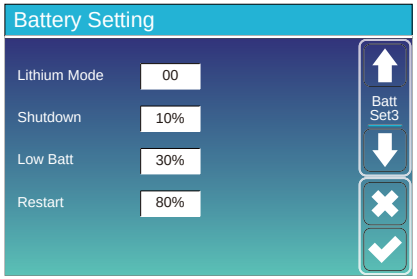

Lithium Mode--This is BMS protocol.default is 0 please reference the document（Approved Battery-Deye）.

Shutdown 10%--the inverter will shutdown if the SOC is below this.

Low Batt 20% --the inverter will shutdown if the SOC is below this.

Restart 40% --Restart level when inverter shutdown.

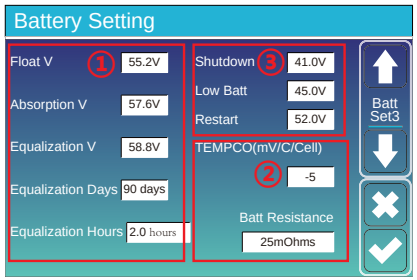

This is Battery 4 tages charge voltage. ①

This is for professional installers,you can hold default if you do not know. ②

Shutdown 10%--the inverter will shutdown if the SOC is below this.

Low Batt 20% --the inverter will alarm if the SOC is below this. ③

Restart 40% --Restart level when inverter shutdown.

5.7 System Work Mode Setup Menu

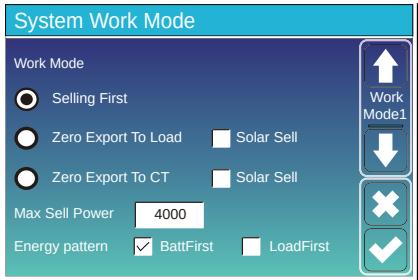

Work Mode

Selling First : It means that the excess energy has priority in grid connection.

Zero Export To Load : It means output power according to it consumed by the load.

Zero Export To CT : It means output power according to the CT position.

Solar Sell : It means that the excess solar energy can be integrated into the grid.

Max Sell Power 0-8000W

Energy Pattern

BattFirst--- It means solar power will charge battery first, when battery is full then feed-out power to the Load or Grid.

LoadFirst-- The solar energy will be used to supply the local load first,then to charge the battery.The redundant power will export to the public grid.

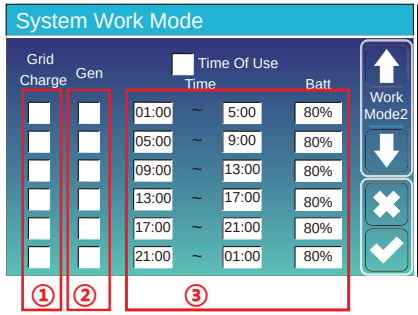

Time of use

① Switch for Grid charging the battery.

② Switch for Gen charging the battery.

③ There are six time period can be set, each period must from small to large.

5.8 Grid Setup Menu

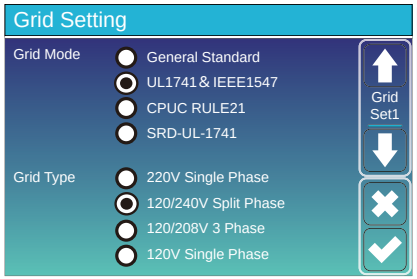

Please select the correct Grid Mode in your local area. If you are not sure, please choose General Standard.

Please select the correct Grid Type in your local area, otherwise the machine will not work or be damaged.

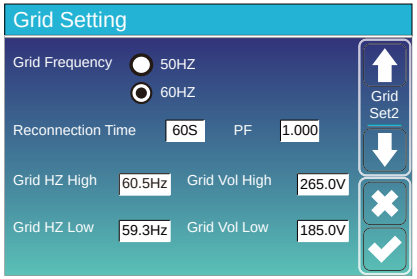

UL1741&IEEE1547，CPUC RULE21，SRD-UL-1741

No need to set the function of this interface.

General Standard

Please select the correct Grid Frequency in your local area. You can hole this in default value。

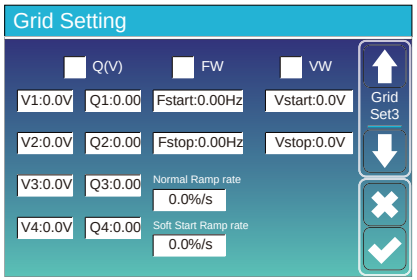

For California only.

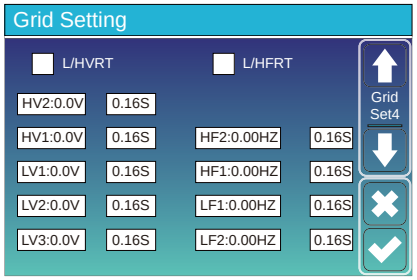

For California only.

5.9 Generator Port Use Setup Menu

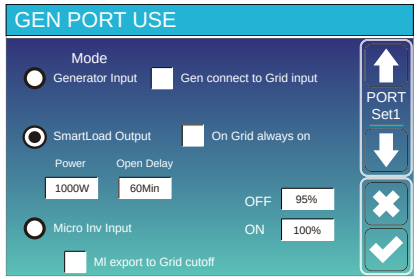

Genertor Input:use Genertor

SmartLoad Output: if the SOC is up than "ON" and solar power is high than 1000W. the inverter will open smartload.

On Grid always on:mean when have Grid,the smartload will always on

Micro Inv Input:Inverter will open Microinverter.if the SOC if below the "ON" and close if the SOC if up than the "OFF"

5.10 Advanced Function Setup Menu

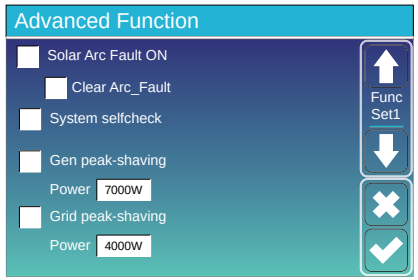

Solar Arc Fault ON---This is only for US.

System selfcheck ---Disable. this is only for factory.

Gen Peak-shaving---Enable When the power of the generator exceeds the rated value of it, the inverter will provide the redundant part to ensure that the generator will not overload.

Grid Peak-shaving---Enable When the power of the grid exceeds the set value, the inverter will provide the redundant part to ensure that the grid power does not exceed the set value.

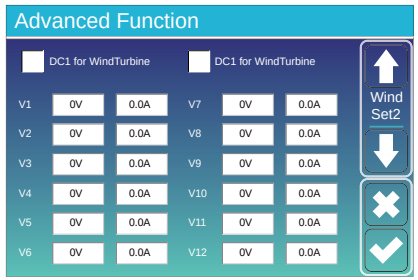

This is for WindTurbine

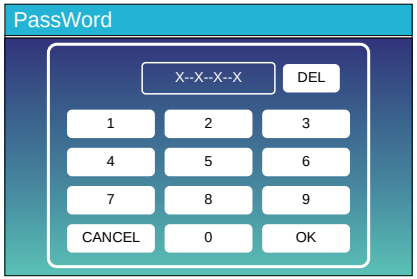

Factory restart: 9999

Lock out all changes:7777

5.11 Device Info Setup Menu

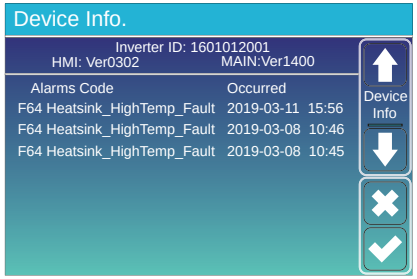

This page show Inverter ID, Inverter version and alarm codes.

HMI: LCD version

MAIN: MCU version

6. Mode

Mode I:Basic

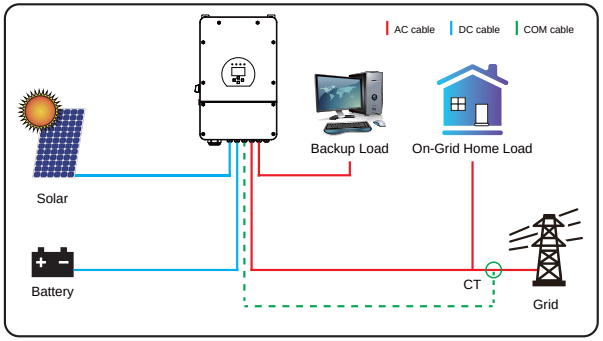

Mode II: With WindTurbine

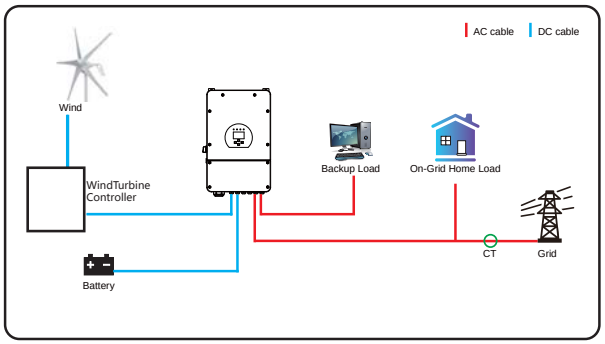

Mode III: With Generator

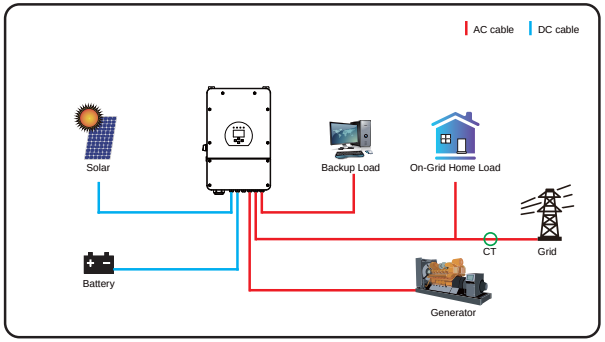

Mode IV: With Smart-Load

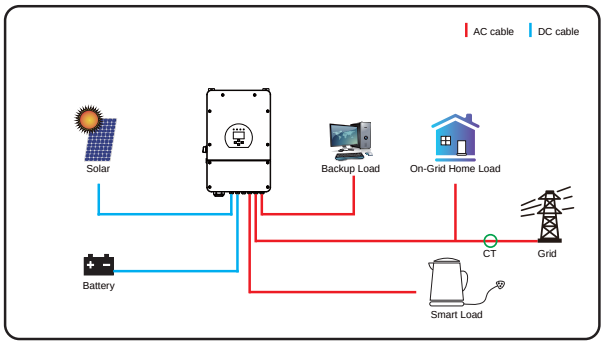

Mode V: With On-Grid Inverter

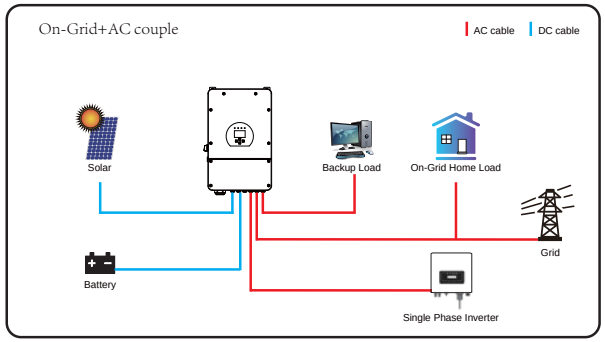

The 1st priority power of the system is always the PV power,then 2nd and 3rd priority power will be the battery bank or grid according to the settings. The last power backup will be the Generator if it is available.

7. Fault information and processing

The energy storage inverter is designed according to the grid-connected operation standard and meets the safety requirements and electromagnetic compatibility requirements. Before leaving the factory, the inverter undergoes several rigorous tests to ensure that the inverter can operate reliably.

If any of the fault messages listed in Table 6-1 appear on your inverter and the fault has not been removed after restarting, please contact your local dealer or service center. You need to have the following information ready.

1. Inverter serial number;
2. Distributor or service center of the inverter ;
3. On-grid power generation date;
4. The problem description (including the fault code and indicator status displayed on the LCD) is as detailed as possible.
5. Your contact information.In order to give you a clearer understanding of the inverter's fault information, we will list all possible fault codes and their descriptions when the inverter is not working properly.

In order to give you a clearer understanding of the inverter's fault information, we will list all possible fault codes and their descriptions when the inverter is not working properly.

Fault information	Instruction
F01	DC_Inversed_Failure
F02	DC_Insulation_Failure
F03	GFDI_Failure
F04	GFDI_Ground_Failure
F05	EEPROM_Read_Failure
F06	EEPROM_Write_Failure
F07	GFDI_Fuse_Failure
F08	GFDI_Relay_Failure
F09	IGBT_Failure
F10	AuxPowerBoard_Failure
F11	AC_MainContactor_Failure
F12	AC_SlaveContactor_Failure
F13	Working_Mode_change
F14	DC_OverCurr_Failure
F15	AC_OverCurr_Failure
F16	GFCI_Failure
F17	Tz_COM_OC_Fault
F18	Tz_Ac_OverCurr_Fault
F19	Tz_Integ_Fault
F20	Tz_Dc_OverCurr_Fault
F21	Tz_GFDI_OC_Fault
F22	Tz_EmergStop_Fault

F23	Tz_GFCI_OC_Fault
F24	DC_Insulation_Fault
F25	DC_Feedback_Fault
F26	BusUnbalance_Fault
F27	DC_Insulation_ISO_Fault
F28	DCIOver_M1_Fault
F29	AC_AirSwitch_Fault
F30	AC_MainContactor_Fault
F31	AC_SlaveContactor_Fault
F32	DCIOver_M2_Fault
F33	AC_OverCurr_Fault
F34	AC_Overload_Fault
F35	AC_NoUtility_Fault
F36	AC_GridPhaseSeque_Fault
F37	AC_Volt_Unbalance_Fault
F38	AC_Curr_Unbalance_Fault
F39	INT_AC_OverCurr_Fault
F40	INT_DC_OverCurr_Fault
F41	AC_WU_OverVolt_Fault
F42	AC_WU_UnderVolt_Faul
F43	AC_VW_OverVolt_Fault
F44	AC_VW_UnderVolt_Fault
F45	AC_UV_OverVolt_Fault
F46	AC_UV_UnderVolt_Fault
F47	AC_OverFreq_Fault
F48	AC_UnderFreq_Fault
F49	AC_U_GridCurr_DcHigh_Fault
F50	AC_V_GridCurr_DcHigh_Fault
F51	AC_W_GridCurr_DcHigh_Fault
F52	AC_A_InductCurr_DcHigh_Fault
F53	AC_B_InductCurr_DcHigh_Fault

F54	AC_C_InductCurr_DcHigh_Fault
F55	DC_VoltHigh_Fault
F56	DC_VoltLow_Fault
F57	AC_BackFeed_Fault
F58	AC_U_GridCurr_High_Fault
F59	AC_V_GridCurr_High_Fault
F60	AC_W_GridCurr_High_Fault
F61	AC_A_InductCurr_High_Fault
F62	AC_B_InductCurr_High_Fault
F63	ARC_Fault
F64	Heatsink_HighTemp_Fault

Chart 6-1 Fault information

Under the guidance of our company, customers return our products so that our company can provide service of maintenance or replacement of products of the same value. Customers need to pay the necessary freight and other related costs.
Any replacement or repair of the product will cover the remaining warranty period of the product. If any part of the product or product is replaced by the company itself during the warranty period, all rights and interests of the replacement product or component belong to Ningbo Deye Inverter Technology Co., Ltd.
Factory warranty does not include damage due to the following reasons:

- Damage during transportation of equipment;
- Damage caused by incorrect installation or commissioning;
- Damage caused by failure to comply with operation instructions, installation instructions or maintenance instructions;
- Damage caused by attempts to modify, alter or repair products;
- Damage caused by incorrect use or operation;
- Damage caused by insufficient ventilation of equipment;
- Damage caused by failure to comply with applicable safety standards or regulations;
- Damage caused by natural disasters or force majeure (e.g. floods, lightning, overvoltage, storms, fires, etc.)

In addition, normal wear or any other failure will not affect the basic operation of the product. Any external scratches, stains or natural mechanical wear does not represent a defect in the product.

8.Limitation of Liability

In addition to the product warranty described above, the state and local laws and regulations provide financial compensation for the product's power connection (including violation of implied terms and warranties). The company hereby declares that the terms and conditions of the product and the policy cannot and can only legally exclude all liability within a limited scope.

9. Datasheet

Technical Data	SUN-3.6K-SG01LP1-US/-B	SUN-5K-SG01LP1-US/-B	SUN-6K-SG01LP1-US/-B	SUN-7.6/8K-SG01LP1-US/-B
Battery Input Data				
Battery Type	Lead-acid or Li-Ion			
Battery Voltage Range (V)	40V-60V			
Max. Charging Current (A)	90A	120A	135A	190A
Max. Discharging Current (A)	90A	125A	135A	190A
Charging curve	3 Stages/equalization			
External temperature sensor	Optional			
Charging Strategy for Li-Ion Battery	Self-adaption to BMS			
PV String Input Data				
Max. DC Input Power (W)	4680W	6500W	7800W	9880W/10400W
Max. DC Input Voltage (V)	500V			
MPPT Range (V)	150V-425V		125V-425V	
Start-up Voltage (V)	150V		100V	
Max. Input Current (A)	11A+11A		18A+9A	18A+18A
No. of MPP Trackers	2			
No. of Strings per MPP Tracker	1+1		2+1	2+2
AC Output Data				
Rated AC output and UPS power (W)	3600W	5000W	6000W	7600/8000W
Peak power(off grid)	2 times of rated power, 2 S		2 times of rated power, 10 S	
Max. AC current(A)	17.3A	24A	28.8A	36.4A/38.3A
Output frequency and voltage	50/60Hz; 220/230/240Vac(single phase)		50/60Hz; 120Vac&240Vac (split phase), 230Vac(single phase)	
Max. AC current(A)	Single Phase		Split phase/Single Phase	
Output frequency and voltage	THD<3%(Linear loading<1.5%)			

Efficiency		
Max. Efficiency	97.60%	97.60%
Euro Efficiency	96.50%	97.00%
MPPT Efficiency	99.90%	99.90%
Protection		
PV Arc Faul t detection		Integrated
PV input lightning protection	Integrated	
Anti-islanding Protection	Integrated	
PV String Input Reverse Polarity Protection	Integrated	
Insulation Resistor Detection	Integrated	
Residual Current Monitoring Unit	Integrated	
Output Over Current Protection	Integrated	
Output Shorted Protection	Integrated	
Output Over Voltage Protection	Integrated	
Certifications and Standards		
Grid Regulation	VDE-ARN 4105,VDE 0126,AS4777, NRS2017,G98,G99,EN50438	UL1741,IEEE1547, VDE-ARN 4105
Safety Regulation	IEC62109-1&2	IEC62109-1&2, IEC62040-1
EMC	EN61000-6-1, EN61000-6-3	EN61000-6-1, EN61000-6-3, FCC 15 class B
General Data		
Operating Temperature Range (℃)	-25~60℃, >45℃ Derating	
Cooling	Fan	
Noise (dB)	<30	
Communication with BMS	RS485; CAN	
Weight (kg)	20.5KG	32KG
Size (Width*Height*Depth mm)	580*330*217mm	680*420*233mm
Protection Degree	IP65/IP20	
Installation style	Wall-mounted	
Warranty	5 years	

Stick Logger（WiFi）

Model：LSW-3

Warning:
1. Please remove logger after power off.
2. Reset button supports direct press. Do not remove waterproof plug.

Notice:

Please read this manual carefully before using products and keep it in the place where O&M providers can easily find.

Due to product upgrade and other factors, the content of this manual might change from time to time. Please take actual product as standard and get latest manual from www.solarman.cn or sales. Unless otherwise agreed herein, this manual will only be used as guidance. Any statement, information or suggestion in this manual will not take any form of responsibility.

Without written permission, any content of this document (partly or entirely) cannot be extracted, copied or transmitted in any form by any company or individual.

Download APP

for iOS for Andriod

SOLARMAN for end user

for iOS for Andriod

SOLARMAN PRO for business

iPhone：Search “SOLARMAN”in Apple Store.

Android：Search “SOLARMAN”in Google Play.

Scan QR code to get quick guide

LSW-3-EN

1. Stick Logger Installation

Type 1

Step1: Assemble logger to the inverter communication interface as shown in the diagram.

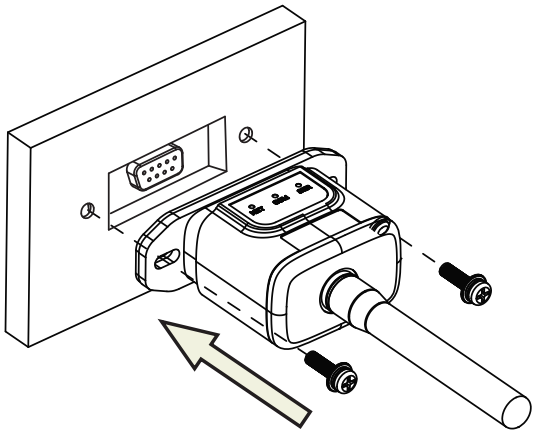

According to the arrow direction.

Step2: Install/Remove

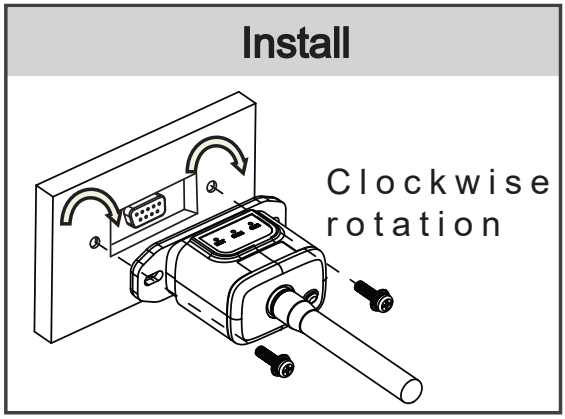

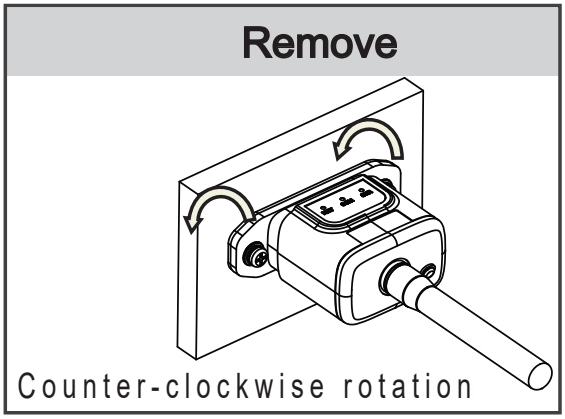

Warning:
Please do not hold the logger body to rotate while install or remove the logger.

Type 2

Step1: Assemble logger to the inverter communication interface as shown in the diagram.

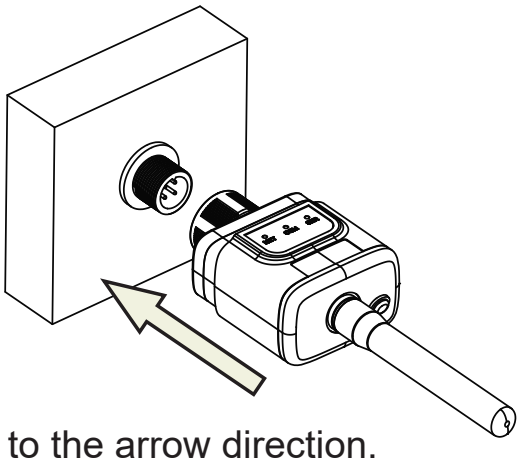

According to the arrow direction.

Step2: Install/Remove

Install	Remove
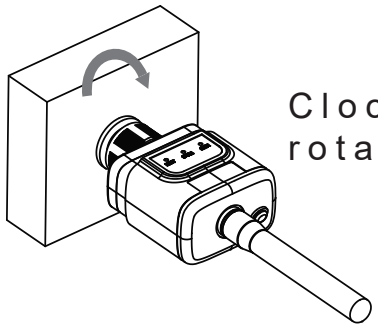 Clockwise rotation	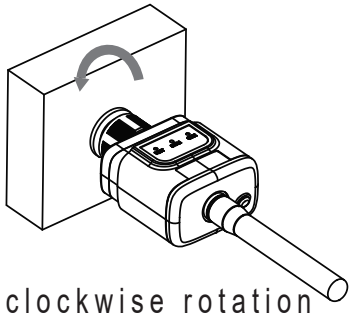 Counter-clockwise rotation

Warning:
Please do not hold the logger body to rotate while install or remove the logger.

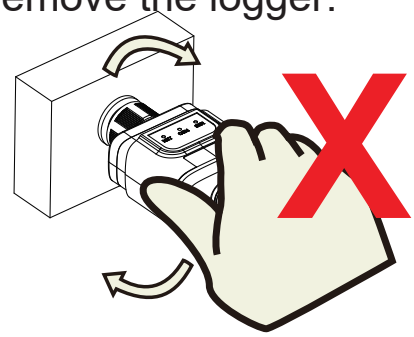

2. Logger Status

2.1 Check Indicator light

Lights	Implication	Status Description(All lights are single green lights.)
● NET	Communication with router	1.Light off: Connection to the router failed. 2.On 1s/Off 1s(Slow flash): Connection to the router succeeded. 3.Light keeps on: Connection to the server succeeded. 4.On 100ms/Off 100ms(Fast flash): Distributing network fast.
● COM	Communication with inverter	1.Light keeps on: Logger connected to the inverter. 2.Light off: Connection to the inverter failed. 3.On 1s/Off 1s(Slow flash): Communicating with inverter.
● READY	Logger running status	1.Light off: Running abnormally. 2.On 1s/Off 1s (Slow flash): Running normally. 3.On 100ms/Off 100ms(Fast flash): Restore factory settings.

The normal operation status of the stick logger, when router connected to the network normally:

1.Connection to the server succeeded: NET light keeps on after the logger powered on.
2.Logger running normally: READY light flashes.
3.Connection to the inverter succeeded: COM light keeps on.

3. Abnormal State Processing

If the data on platform is abnormal when the stick logger is running, please check the table below and according to the status of indicator lights to complete a simple troubleshooting. If it still can not be resolved or indicator lights status do not show in the table below, please contact Customer Support.
(Note: Please using the following table query after power-on for 2mins at least.)

NET ● NET	COM ● COM	READY ● READY	Fault Description	Fault Cause	Solution
Any state	OFF	Slow flash	Communication with inverter abnormal	1.Connection between stick logger and inverter loosen. 2.Inverter does not match with stick logger's communication rate.	1.Check the connection between stick logger and inverter. Remove the stick logger and install again. 2.Check inverter's communication rate to see if it matches with stick logger's. 3.Long press Reset button for 5s, reboot stick logger.
OFF	ON	Slow flash	Connection between logger and router abnormal	1.Stick logger does not have a network. 2.Antenna abnormal 3.Router WiFi signal strength weak.	1.Check if the wireless network configured. 2.Check the antenna, if there is any damage or loose. 3.Enhance router WiFi signal strength. 4.Long press Reset button for 10s, reboot stick logger and networking again.
Slow flash	ON	Slow flash	Connection between logger and router normal, connection between logger and remote server abnormal.	1.Router networking abnormal. 2.The server point of logger is modified. 3.Network limitation, server cannot be connected.	1.Check if the router has access to the network. 2.Check the router's setting, if the connection is limited. 3.Contact our customer service.

NET ● NET	COM ● COM	READY ● READY	Fault Description	Fault Cause	Solution
OFF	OFF	OFF	Power supply abnormal	1.Connection between stick logger and inverter loosen or abnormal. 2.Inverter power insufficient. 3.Stick Logger abnormal.	1.Check the connection, remove the stick logger and install again. 2.Check inverter output power. 3.Contact our customer service.
Fast flash	Any state	Any state	SMARTLINK networking status	Normal	1.Exit automatically after 5mins. 2.Long press Reset button for 5s, reboot stick logger. 3.Long press Reset button for 10s, restore factory settings.
Any state	Any state	Fast flash	Restore factory settings	Normal	1.Exit automatically after 1mins. 2.Long press Reset button for 5s, reboot stick logger. 3.Long press Reset button for 10s, restore factory settings.

4. Usage methods and notices for Reset button

4.1 Usage methods and key-press descriptions for Reset button

Usage: Press

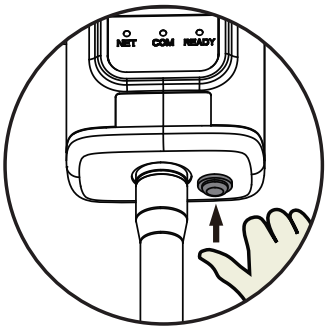

Key-press	Status Description	Light Status
Short press 1s	SMARTLINK rapid networking status.	NET light flashes fast for 100ms.
Long press 5s	Rebooting the stick logger.	All lights are extinguished immediately.
Long press 10s	Resetting the stick logger.	1.All lights are extinguished after 4s. 2.READY light flashes fast for 100ms.

4.2 Notices for Reset button

Notice:
Do not remove waterproof plug.

APP USER MANUAL

1.Registration

Click [Register] to create new account. You can use email to register.

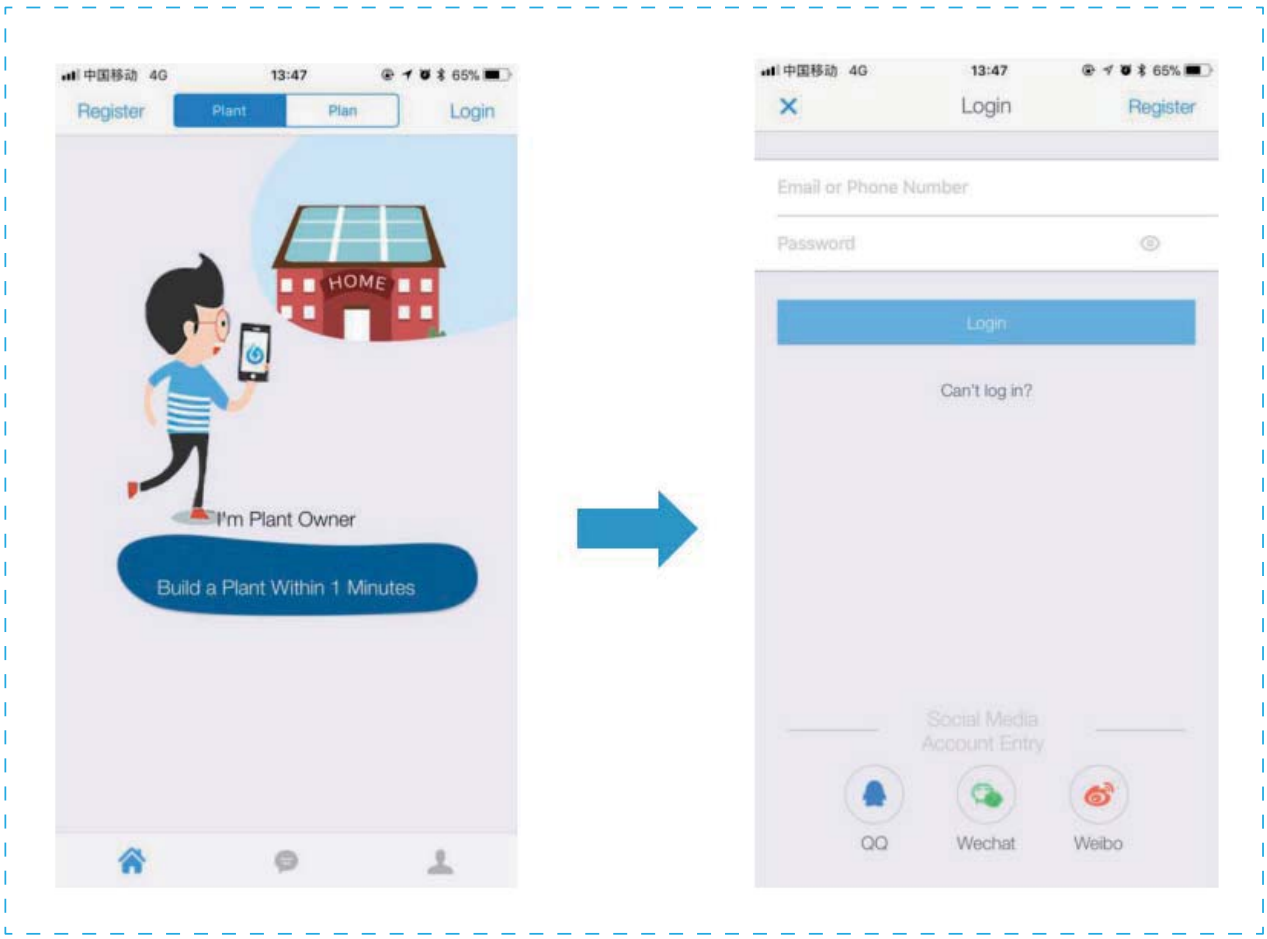

2. Create Plant

2.1 Click [+] and select [Create Plant]. Then scan the serial number of the stick logger, or manually enter the serial number.

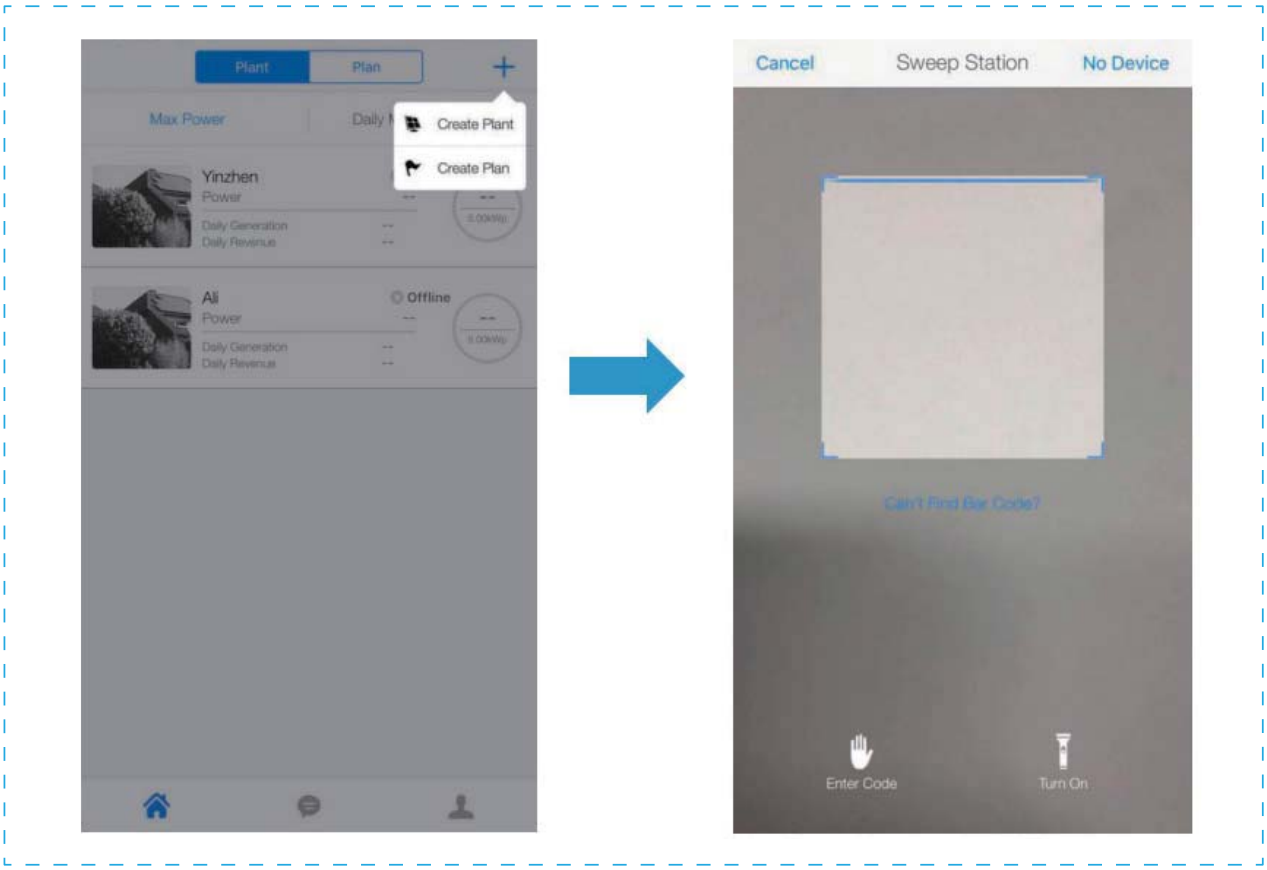

2.2 Edit plant information.

(1)Confirm your plant location (GPS function will automatically locate the plant site; if you want to modify the location, click the "map" icon in box a, and then manually enter the address in box b)

(2)Select your plant type

(3)Select your grid type

(4)Fill in plant capacity

(It is not necessary to modify other information because APP has obtained local electricity price and FIT already.)

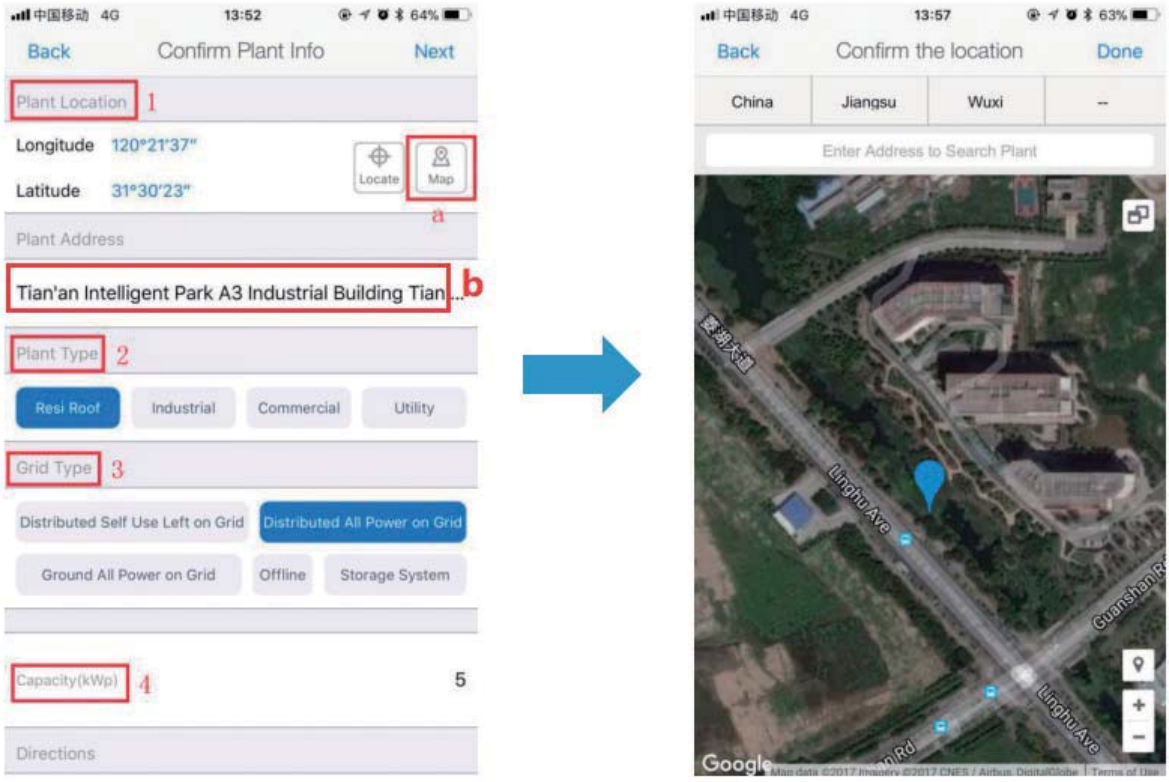

2.3 Input Plant Name

It is suggested to create a plant name like "location + name + capacity" (e.g., Wuxi IGEN 8.1 KW), then click [Done].

2.4 Now you can see your new plant on the homepage.

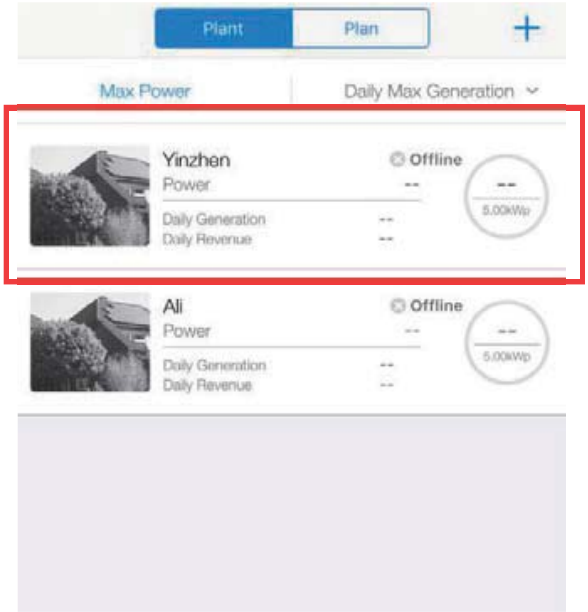

3. WiFi Connection Configuration

Select the plant which WiFi logger needs to be configured， click “Device”, then “Connect”, choose the WiFi logger SN needs to be configured.

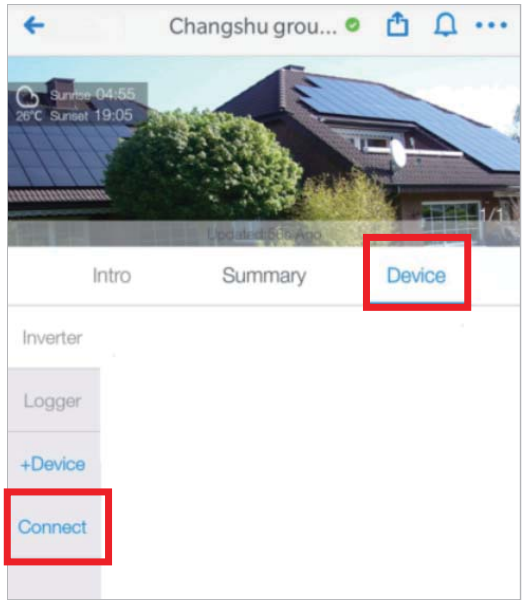

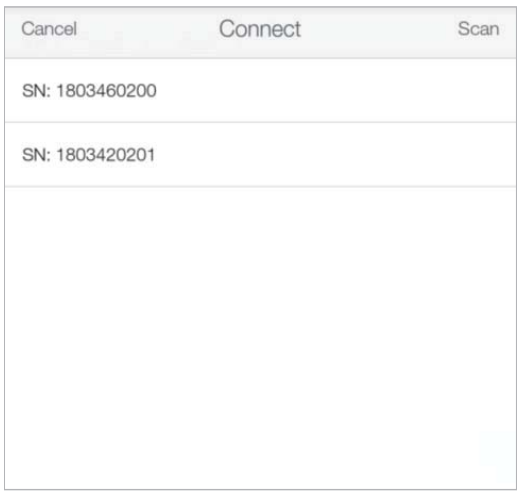

Smart Link configuration

（1） Enter networking page-short press reset button for 1S-NET light flashing-Entering configuration mode.

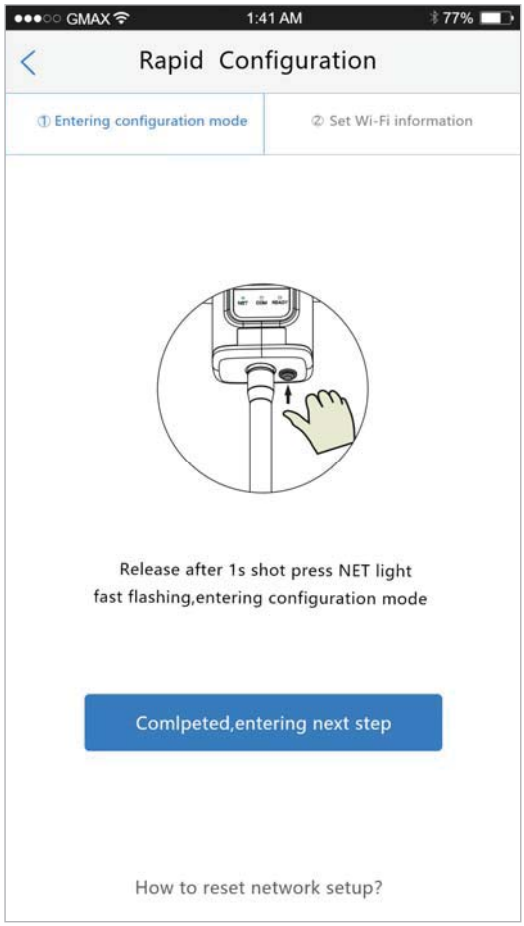

（2） Make sure the phone connected the WiFi network, entering WiFi password, starting to configure.

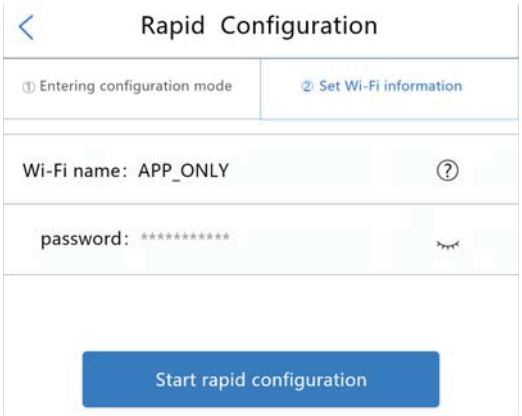

（3） The signal lights slowly flash or keep on indicate that the network has been successfully accessed, otherwise it fails. Please check again in a few minutes. If the signal lights are still not normal, please reconfigure it.

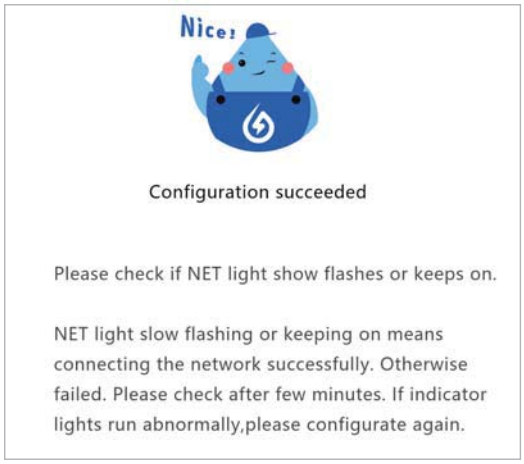

Notice：

1.During configuration, it will show configuration tips.

2.If the configuration process lasts more than 20s, configuration failed, entering the next step(The picture below will show the next step.)

(1)Check the fault reason, click to go back, configurate again.

(2)If still not succeeded, click to switch configuration mode, entering AP configuration.

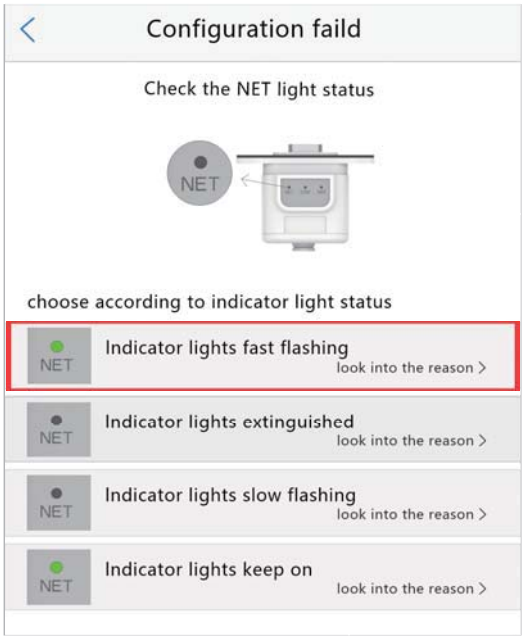

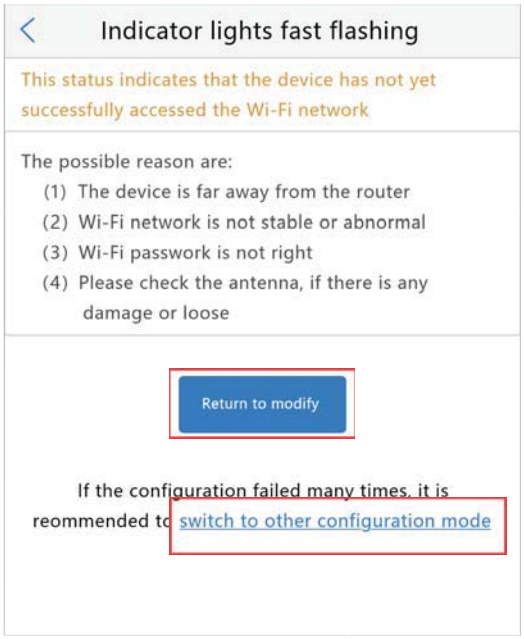

AP configuration

（1） Please make sure that the phone is connected to the WiFi network and enter the WiFi password.

APP will automatically get the current mobile phone WiFi account, type in the WiFi password to enter the configuration process. If the network is not the one logger needs to configure, switch the network. When switching the account, you can manually enter your network account. Note: 5G WiFi is not supported for now.

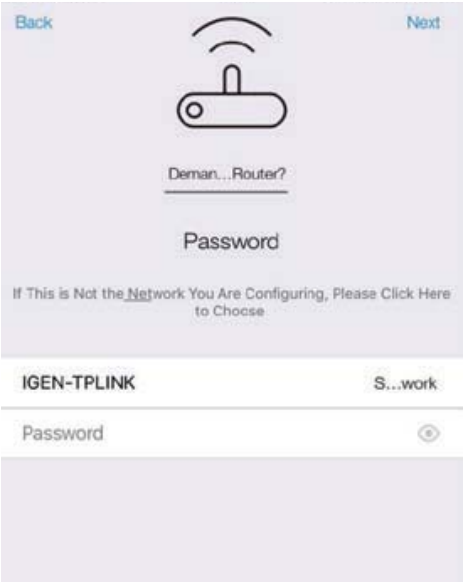

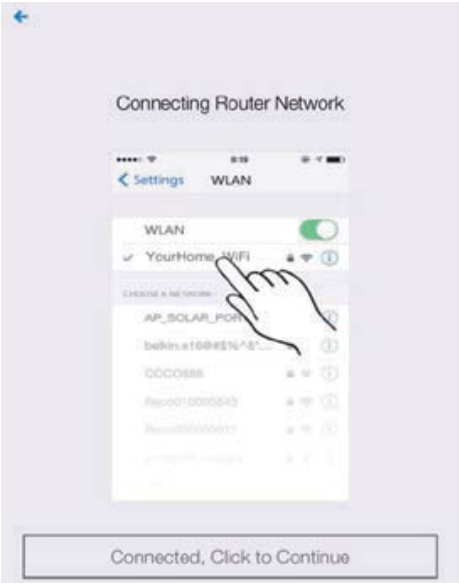

(2) Go to [Network Settings] interface, and select the stick logger’ s network AP_XXXXXXXXXX(S/N). Then return to SOLARMAN APP, the stick logger will start to configure.

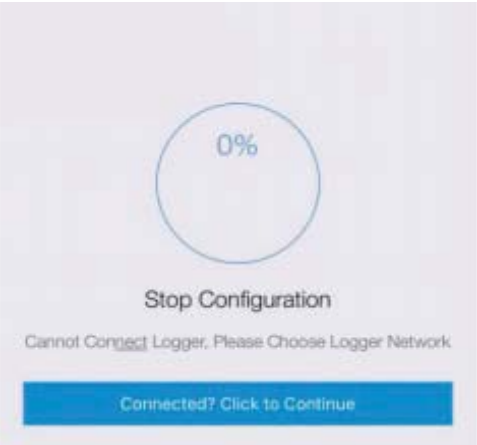

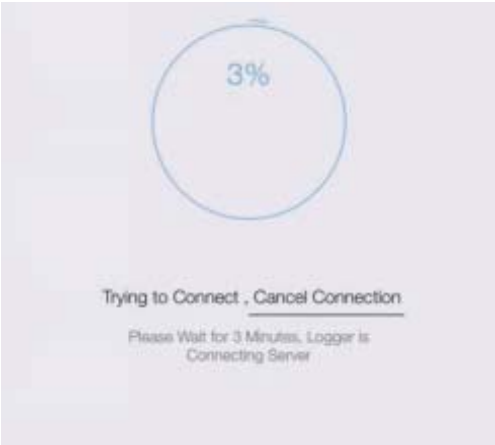

Notice

If it is unable to find an AP_XXXXX(S/N) in wireless network list, please make sure the distance between WiFi router and stick logger is less than 10 meters. If there is any problem during the connection or setting process, you can repeat the above steps. If you still cannot find the AP_XXXXX, you can check the logger manual for troubleshooting or contact our Customer Service.

(3) Normally, configuration process will take 3-5mins. After that, you can go back to tab [Device] and click [+Device] to add more devices.

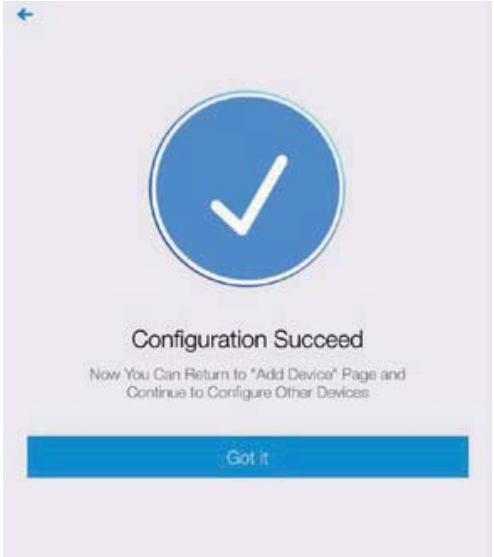

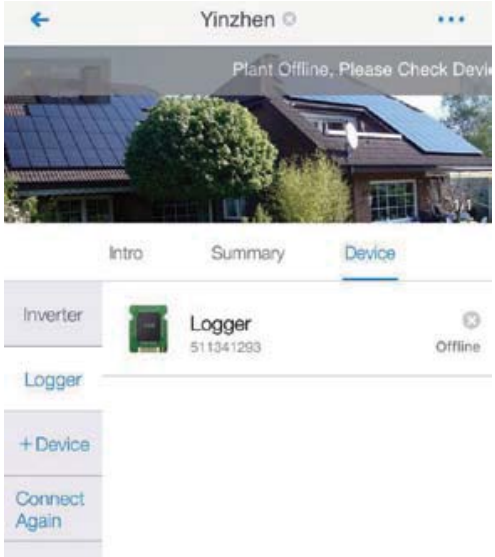

If the configuration fails, the reasons may be:

1. Router password is wrong. Please click [Retry] and check the password.

2.The router's network signal is weak and the logger is too far away from the router. Please put the router closer to the logger.

3.Click too fast during the Logger's AP connection. Please wait a few seconds and then jump to the configuration after Logger's AP is connected.

If you encounter following situations, please reconfigure logger network :

1.Change router

2.Change WiFi password

3.Change router's SSID

4.Enterprise routers may restrict WiFi connectivity.

Warning: Please make sure the stick logger is working properly before you leave the site. If there is anything abnormal, please do not leave the site and contact customer service at the first time.
Customer service number: 400-181-0512

If you have any technical queries about our products, please contact us and provide the following information:
1. Product model and serial number of stick logger.
2. Product model and serial number of connected inverter.
Thank you for your support and cooperation!

Caution:

The user is cautioned that changes or modifications not expressly approved by the party responsible for compliance could void the user's authority to operate the equipment.

This device complies with Part 15 of the FCC Rules. Operation is subject to the following two conditions: (1) this device may not cause harmful interference, and (2) this device must accept any interference received, including interference that may cause undesired operation.

NOTE: This equipment has been tested and found to comply with the limits for a Class B digital device, pursuant to Part 15 of the FCC Rules. These limits are designed to provide reasonable protection against harmful interference in a residential installation. This equipment generates, uses and can radiate radio frequency energy and, if not installed and used in accordance with the instructions, may cause harmful interference to radio communications. However, there is no guarantee that interference will not occur in a particular installation. If this equipment does cause harmful interference to radio or television reception, which can be determined by turning the equipment off and on, the user is encouraged to try to correct the interference by one or more of the following measures:

-- Reorient or relocate the receiving antenna.
-- Increase the separation between the equipment and receiver.
-- Connect the equipment into an outlet on a circuit different from that to which the receiver is connected.
-- Consult the dealer or an experienced radio/TV technician for help.

FCC Radiation Exposure Statement:
This equipment complies with FCC radiation exposure limits set forth for an uncontrolled environment. This equipment should be installed and operated with a minimum distance of 20cm between the radiator and your body.
This transmitter must not be co-located or operating in conjunction with any other antenna or transmitter.

WARRANTY CARD

Dear Customers,

Thank you very much for using our products. In order to provide you with better service, please fill in the warranty card and reserve it carefully.

User Name		Customer Name	
Purchase Date		Customer Phone	
Product Name &Model		Product SN	
Customer Address			
Order No.			
Maintenance Records	Date	Failure Cause and Treatment	

Warranty Policy

If there is any breakdown which caused by the product‘s own quality, customers can send the warranty card with the product to our Customer Service Center.

Notice

1.According to the prescription, the warranty period is 5 years(From the day when you receive the product). During the warranty period, we provide free maintenance service to solve all non-artifical quality problems if the product is under normal usage circumstance. If the product exceeds the warranty period, only maintenance cost will be charged.

2.If the failure of the product is not due to quality problems(such as improper use, improper storage, unauthorized disassembly, etc.) , maintenance cost will be charged.

3.Please pay for back goods freight in advance. Freight collect is not accepted.

Support Email：customerservice@solarmanpv.com

Customer Hotline：+86 400 181 0512

Company Address: A2-B-4, Tian’an iPark, No.228 Linghu Avenue, New District, Wuxi, Jiangsu Province, P.R.China

CERTIFICATION

This product has been tested and meet the quality standards, granted the factory.