TEST REPORT

Product Name : Bluetooth Headset
Model Number : SP-350BT
FCC ID : 2AV73SP-350BT

Prepared for : VEC Electronics Corporation
Address : 71 Grand Avenue, Palisades Park, Palisades Park, New Jersey, United States, 07650

Prepared by : EMTEK (SHENZHEN) CO., LTD.
Address : Bldg 69, Majialong Industry Zone, Nanshan District, Shenzhen, Guangdong, China

Tel: (0755) 26954280
Fax: (0755) 26954282

Report Number : ENS2202220088W00501R
Date(s) of Tests : March 3, 2022 to March 28, 2022
Date of issue : March 28, 2022

$二维码$

TABLE OF CONTENTS

1 TEST RESULT CERTIFICATION **3**

2 EUT TECHNICAL DESCRIPTION **5**

3 SUMMARY OF TEST RESULT **6**

4 TEST METHODOLOGY **7**

4.1 GENERAL DESCRIPTION OF APPLIED STANDARDS 7
4.2 MEASUREMENT EQUIPMENT USED 7
4.3 DESCRIPTION OF TEST MODES 8

5 FACILITIES AND ACCREDITATIONS **9**

5.1 FACILITIES 9
5.2 LABORATORY ACCREDITATIONS AND LISTINGS 9

6 TEST SYSTEM UNCERTAINTY **10**

7 SETUP OF EQUIPMENT UNDER TEST **11**

7.1 RADIO FREQUENCY TEST SETUP 1 11
7.2 RADIO FREQUENCY TEST SETUP 2 11
7.3 CONDUCTED EMISSION TEST SETUP 13
7.4 BLOCK DIAGRAM CONFIGURATION OF TEST SYSTEM 14
7.5 SUPPORT EQUIPMENT 14

8 TEST REQUIREMENTS **15**

8.1 DTS 6DB BANDWIDTH 15
8.2 MAXIMUM PEAK CONDUCTED OUTPUT POWER 18
8.3 MAXIMUM POWER SPECTRAL DENSITY 21
8.4 UNWANTED EMISSIONS IN NON-RESTRICTED FREQUENCY BANDS 24
8.5 RADIATED SPURIOUS EMISSION 29
8.6 CONDUCTED EMISSIONS TEST 42
8.7 ANTENNA APPLICATION 45

1 TEST RESULT CERTIFICATION

Applicant	:	VEC Electronics Corporation
Address	:	71 Grand Avenue, Palisades Park, Palisades Park, New Jersey, United States, 07650
Manufacturer	:	OKEXUN ELECTRONICS (SHENZHEN) LIMITED
Address	:	FLOOR 4-5,BUILDING 5,XI LIANG LNDUSTRIAL ZONE,SHUIJING COMMUNITY,JIHUA STREET,LONGGANG DISTRICT,SHENZHEN
EUT	:	Bluetooth Headset
Model Name	:	SP-350BT
Trademark	:	VEC

Measurement Procedure Used:

APPLICABLE STANDARDS	
STANDARD	**TEST RESULT**
FCC 47 CFR Part 2 , Subpart J FCC 47 CFR Part 15, Subpart C	**PASS**

The above equipment was tested by EMTEK(SHENZHEN) CO., LTD. The test data, data evaluation, test procedures, and equipment configurations shown in this report were made in accordance with the procedures given in ANSI C63.10 (2013) and the energy emitted by the sample EUT tested as described in this report is in compliance with the requirements of FCC Rules Part 2 and Part 15.247

The test results of this report relate only to the tested sample identified in this report

Date of Test	:	March 3, 2022 to March 28, 2022
Prepared by	:	Una Yu/Editor
Reviewer	:	Joe Xia/Supervisor
Approved & Authorized Signer	:	Lisa Wang/Manager

EMTEK (SHENZHEN) CO., LTD. TESTING

Modified Information

Version	Report No.	Revision Date	Summary
Ver.1.0	ENS2202220088W00501R	/	Original Report

2 EUT TECHNICAL DESCRIPTION

Product	Bluetooth Headset
Model Number	SP-350BT
Device Type	BLE V5.0
Data Rate :	1Mbps
Modulation:	GFSK
Operating Frequency Range:	2402-2480MHz
Number of Channels:	40 Channels
Antenna Type:	Integrated Antenna
Antenna Gain:	8dBi
Power supply	Battery 3.7V, 100mAh Adapter： Model: JHD-AP006U-050100BB-2 Input: 100~240V, 50/60Hz, 0.2A Output: 5V, 1A
Temperature Range:	-10°C ~ 50°C

Note: *for more details, please refer to the user's manual of the EUT.*

3 SUMMARY OF TEST RESULT

FCC Part Clause	Test Parameter	Verdict	Remark
15.247(a)(2)	DTS (6dB) Bandwidth	PASS	
15.247(b)(3)	Maximum Peak Conducted Output Power	PASS	
15.247(e)	Maximum Power Spectral Density Level	PASS	
15.247(d)	Unwanted Emission Into Non-Restricted Frequency Bands	PASS	
15.247(d) 15.209	Unwanted Emission Into Restricted Frequency Bands (conducted)	PASS	
15.247(d) 15.209	Radiated Spurious Emission	PASS	
15.207	Conducted Emission Test	N/A	
15.247(b)	Antenna Application	PASS	
	NOTE1: N/A (Not Applicable) NOTE2: According to FCC OET KDB 558074, the report use radiated measurements in the restricted frequency bands. In addition, the radiated test is also performed to ensure the emissions emanating from the device cabinet also comply with the applicable limits.		

RELATED SUBMITTAL(S) / GRANT(S):

This submittal(s) (test report) is intended for FCC ID: 2AV73SP-350BT filing to comply with Section 15.247 of the FCC Part 15, Subpart C Rules.

4 TEST METHODOLOGY

4.1 GENERAL DESCRIPTION OF APPLIED STANDARDS

According to its specifications, the EUT must comply with the requirements of the following standards:
FCC 47 CFR Part 2, Subpart J
FCC 47 CFR Part 15, Subpart C
FCC KDB 558074 D01 15.247 Meas Guidance v05r02

4.2 MEASUREMENT EQUIPMENT USED

For Conducted Emission Test Equipment

Equipment	Manufacturer	Model No.	Serial No.	Last Cal.	Cal. Interval
EMI Test Receiver	Rohde & Schwarz	ESCI	101045	2021/5/15	1Year
PULSE LIMTER	Rohde & Schwarz	ESH3-Z2	100107	2021/5/15	1Year
AMN	Rohde & Schwarz	ESH3-Z5	100191	2021/5/15	1Year
AMN	Schwarzbeck	NNLK 8129	8129203	2021/5/15	1Year
V-Network	Rohde & Schwarz	ESH3-Z6	100011	2021/5/15	1Year
V-Network	Rohde & Schwarz	ESH3-Z6	100253	2021/5/16	1Year

For Spurious Emissions Test

Equipment	Manufacturer	Model No.	Serial No.	Last Cal.	Cal. Interval
Pre-Amplifier	HP	8447F	2944A07999	2021/5/15	1Year
EMI Test Receiver	Rohde & Schwarz	ESCI	101414	2021/5/15	1Year
Bilog Antenna	Schwarzbeck	VULB9163	712	2021/7/5	2 Year
Horn antenna	Schwarzbeck	BBHA9120D	9120D-1178	2020/7/4	2 Year
Pre-Amplifie	Lunar EM	LNA1G18-48	J1011131010001	2021/5/15	1Year
Spectrum Analyzer	Rohde & Schwarz	FSV40	100967	2021/5/15	1Year
Horn antenna	Schwarzbeck	BBHA9170	9170-399	2021/6/12	2 Year
Loop Antenna	Schwarzbeck	FMZB1519	1519-012	2021/6/12	2 Year

For other test items:

Equipment	Manufacturer	Model No.	Serial No.	Last Cal.	Cal. Interval
Signal Analyzer	Agilent	N9010A	MY53470879	2021/5/16	1Year
Spectrum Analyzer	Rohde & Schwarz	FSV40	100967	2021/5/15	1Year
Power Meter	\	PS-X10-100	\	2021/5/15	1Year
Temp/ Humidity Chamber	ESPEC	EL-02KA	12107166	2021/7/3	1Year

4.3 DESCRIPTION OF TEST MODES

The EUT has been tested under its typical operating condition.
The EUT configuration for testing is installed on RF field strength measurement to meet the Commissions requirement and operating in a manner which intends to maximize its emission characteristics in a continuous normal application.

The Transmitter was operated in the normal operating mode. The TX frequency was fixed which was for the purpose of the measurements.

Test of channel included the lowest and middle and highest frequency to perform the test, then record on this report.

Those data rates were used for all test.

Pre-defined engineering program for regulatory testing used to control the EUT for staying in continuous transmitting and receiving mode is programmed.

Frequency and Channel list:

Channel	Frequency (MHz)	Channel	Frequency (MHz)	Channel	Frequency (MHz)
0	2402	19	2440	…	…
1	2404	20	2442	37	2476
2	2406	21	2444	38	2478
…	…	…	…	39	2480
Note: fc=2402MHz+k×1MHz k=1 to 39					

Test Frequency and channel:

Lowest Frequency		Middle Frequency		Highest Frequency	
Channel	Frequency (MHz)	Channel	Frequency (MHz)	Channel	Frequency (MHz)
0	2402	19	2440	39	2480

5 FACILITIES AND ACCREDITATIONS

5.1 FACILITIES

All measurement facilities used to collect the measurement data are located at

Bldg 69, Majialong Industry Zone District, Nanshan District, Shenzhen, China
The sites are constructed in conformance with the requirements of ANSI C63.7, ANSI C63.10 and CISPR Publication 22.

5.2 LABORATORY ACCREDITATIONS AND LISTINGS

Site Description
EMC Lab. : **Accredited by CNAS**
The Certificate Registration Number is L2291
The Laboratory has been assessed and proved to be in compliance with CNAS-CL01 (identical to ISO/IEC 17025:2017)

Accredited by FCC
Designation Number: CN1204
Test Firm Registration Number: 882943

Accredited by A2LA
The Certificate Number is 4321.01

Accredited by Industry Canada
The Conformity Assessment Body Identifier is CN0008

Name of Firm : EMTEK (SHENZHEN) CO., LTD.
Site Location : Building 69, Majialong Industry Zone, Nanshan District, Shenzhen, Guangdong, China

6 TEST SYSTEM UNCERTAINTY

The following measurement uncertainty levels have been estimated for tests performed on the apparatus:

Test Parameter	Measurement Uncertainty
RF Output Power	±1.0%
Power Spectral Density	±0.9%
Duty Cycle and Tx-Sequence and Tx-Gap	±1.3%
Medium Utilisation Factor	±1.5%
Occupied Channel Bandwidth	±2.3%
Transmitter Unwanted Emission in the Out-of Band	±1.2%
Transmitter Unwanted Emissions in the Spurious Domain	±2.7%
Receiver Spurious Emissions	±2.7%
Temperature	±3.2%
Humidity	±2.5%

Measurement Uncertainty for a level of Confidence of 95%

7 SETUP OF EQUIPMENT UNDER TEST

7.1 RADIO FREQUENCY TEST SETUP 1

The BLE component's antenna ports(s) of the EUT are connected to the measurement instrument per an appropriate attenuator. The EUT is controlled by PC/software to emit the specified signals for the purpose of measurements.

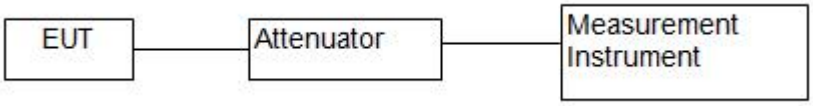

7.2 RADIO FREQUENCY TEST SETUP 2

The test site semi-anechoic chamber has met the requirement of NSA tolerance 4 dB according to the standards: ANSI C63.10. The test distance is 3m.The setup is according to the requirements in Section 13.1.4.1 of ANSI C63.10-2013 and CAN/CSA-CEI/IEC CISPR 22.

Below 30MHz：

The EUT is placed on a turntable 0.8 meters above the ground in the chamber, 3 meter away from the antenna (loop antenna). The Antenna should be positioned with its plane vertical at the specified distance from the EUT and rotated about its vertical axis for maximum response at each azimuth about the EUT. The center of the loop shall be 1 m above the ground. For certain applications, the loop antenna plane may also need to be positioned horizontally at the specified distance from the EUT.

30MHz-1GHz：

The EUT is placed on a turntable 0.8 meters above the ground in the chamber, 3 meter away from the antenna. The maximal emission value is acquired by adjusting the antenna height, polarisation and turntable azimuth. Normally, the height range of antenna is 1 m to 4 m, the azimuth range of turntable is 0° to 360°, and the receive antenna has two polarizations Vertical (V) and Horizontal (H).

Above 1GHz：

The EUT is placed on a turntable 1.5 meters above the ground in the chamber, 3 meter away from the antenna. The maximal emission value is acquired by adjusting the antenna height, polarisation and turntable azimuth. Normally, the height range of antenna is 1 m to 4 m, the azimuth range of turntable is 0° to 360°, and the receive antenna has two polarizations Vertical (V) and Horizontal (H).

(a) Radiated Emission Test Set-Up, Frequency Below 30MHz

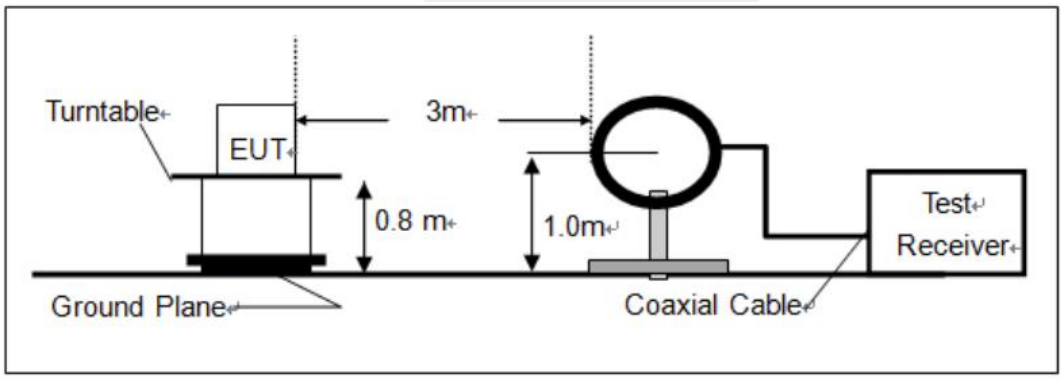

(b) Radiated Emission Test Set-Up, Frequency Below 1000MHz

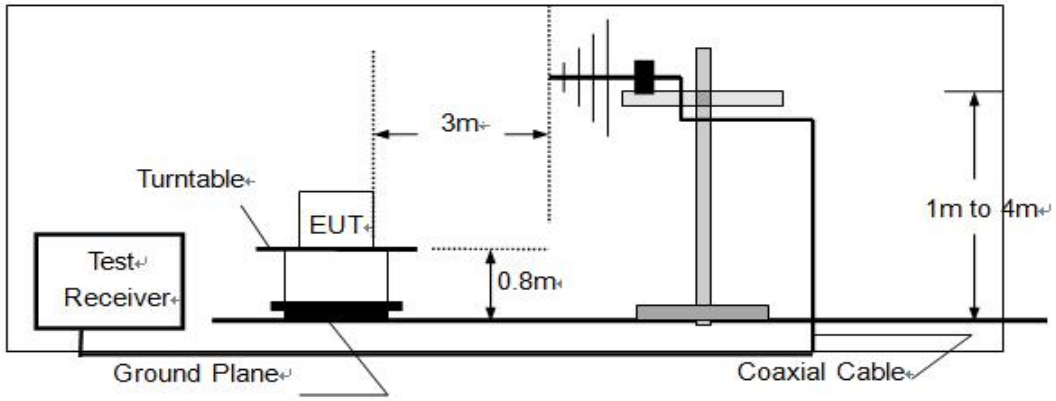

(c) Radiated Emission Test Set-Up, Frequency above 1000MHz

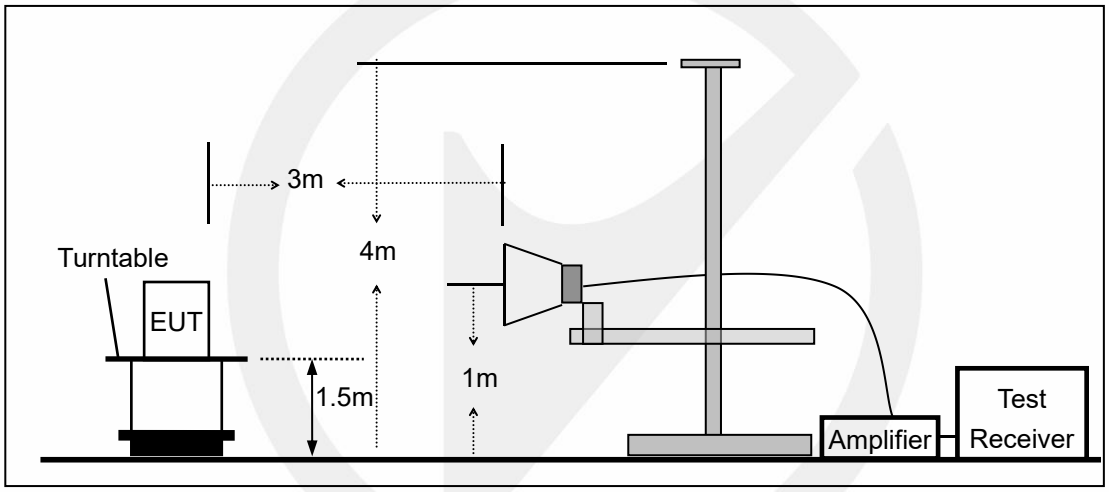

7.3 CONDUCTED EMISSION TEST SETUP

The mains cable of the EUT (maybe per AC/DC Adapter) must be connected to LISN. The LISN shall be placed 0.8 m from the boundary of EUT and bonded to a ground reference plane for LISN mounted on top of the ground reference plane. This distance is between the closest points of the LISN and the EUT. All other units of the EUT and associated equipment shall be at least 0.8m from the LISN.

Ground connections, where required for safety purposes, shall be connected to the reference ground point of the LISN and, where not otherwise provided or specified by the manufacturer, shall be of same length as the mains cable and run parallel to the mains connection at a separation distance of not more than 0.1 m.

According to the requirements in Section 13.1.4.1 of ANSI C63.10-2013 Conducted emissions from the EUT measured in the frequency range between 0.15 MHz and 30 MHz using CISPR Quasi-Peak and average detector mode.

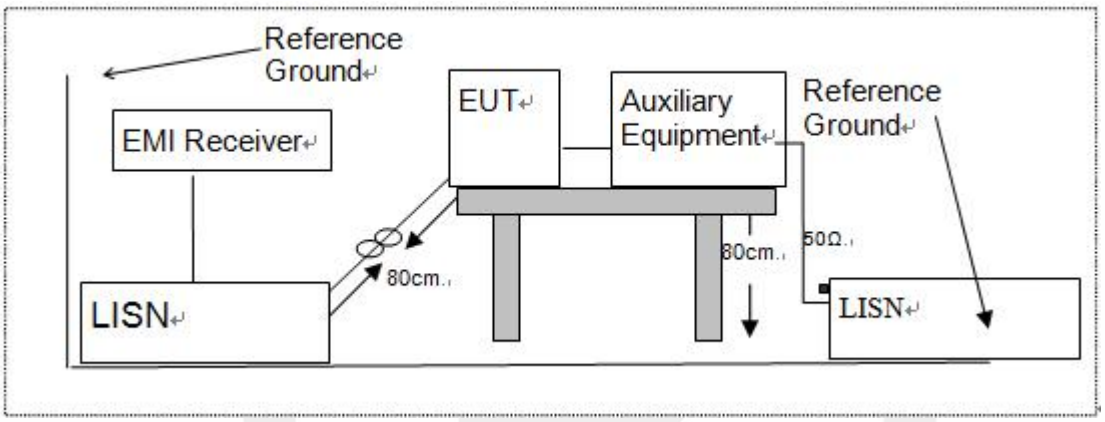

7.4 BLOCK DIAGRAM CONFIGURATION OF TEST SYSTEM

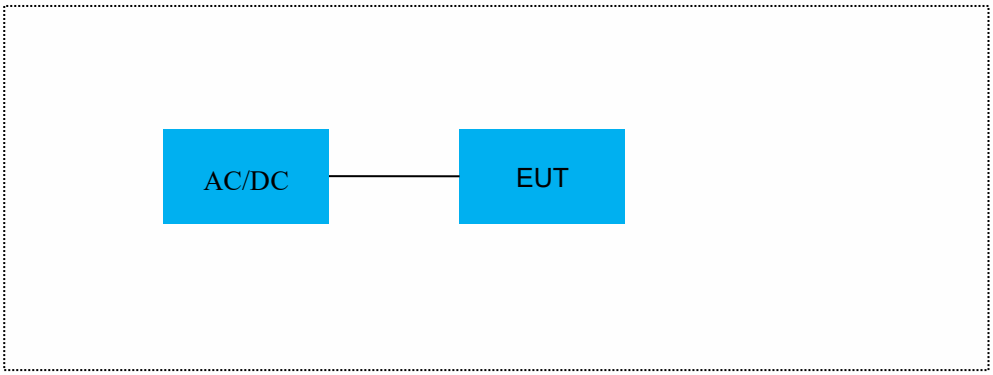

7.5 SUPPORT EQUIPMENT

EUT Cable List and Details			
Cable Description	Length (m)	Shielded/Unshielded	With / Without Ferrite

Auxiliary Cable List and Details			
Cable Description	Length (m)	Shielded/Unshielded	With / Without Ferrite

Auxiliary Equipment List and Details			
Description	Manufacturer	Model	Serial Number

Notes:

1.All the equipment/cables were placed in the worst-case configuration to maximize the emission during the test.

2.Grounding was established in accordance with the manufacturer's requirements and conditions for the intended use.

8 TEST REQUIREMENTS

8.1 DTS 6DB BANDWIDTH

8.1.1 Applicable Standard

According to FCC Part 15.247(a)(2) and KDB 558074 D01 15.247 Meas Guidance v05r02

8.1.2 Conformance Limit

The minimum -6 dB bandwidth shall be at least 500 kHz.

8.1.3 Test Configuration

Test according to clause 7.1 radio frequency test setup 1

8.1.4 Test Procedure

The EUT was operating in BLE mode and controlled its channel. Printed out the test result from the spectrum by hard copy function.
The RF output of EUT was connected to the spectrum analyzer by RF cable and attenuator. The path loss was compensated to the results for each measurement.
Set to the maximum power setting and enable the EUT transmit continuously
Set RBW = 100 kHz.
Set the video bandwidth (VBW) =300 kHz.
Set Span=2 times OBW
Set Detector = Peak.
Set Trace mode = max hold.
Set Sweep = auto couple.
Allow the trace to stabilize.
Measure the maximum width of the emission that is constrained by the frequencies associated with the two outermost amplitude points (upper and lower frequencies) that are attenuated by 6 dB relative to the maximum level measured in the fundamental emission.
Measure and record the results in the test report.

Test Results

Temperature:	26° C
Relative Humidity:	54%
ATM Pressure:	1011 mbar

Operation Mode	Channel Number	Channel Frequency (MHz)	Measurement Bandwidth (kHz)	Limit (kHz)	Verdict
Bluetooth DTS	0	2402	688.3	>500	PASS
	19	2440	686.4	>500	PASS
	39	2480	687.8	>500	PASS

Test Model	DTS (6dB) Bandwidth BLE Channel 0: 2402MHz

Test Model	DTS (6dB) Bandwidth BLE Channel 19: 2440MHz

Test Model	DTS (6dB) Bandwidth BLE Channel 39: 2480MHz

8.2 MAXIMUM PEAK CONDUCTED OUTPUT POWER

8.2.1 Applicable Standard

According to FCC Part 15.247(b)(3) and KDB 558074 D01 15.247 Meas Guidance v05r02

8.2.2 Conformance Limit

The maximum peak conducted output power of the intentional radiator for systems using digital modulation in the 2400 - 2483.5 MHz bands shall not exceed: 1 Watt (30dBm).

8.2.3 Test Configuration

Test according to clause 7.1 radio frequency test setup 1

8.2.4 Test Procedure

■ According to FCC Part15.247(b)(3)
As an alternative to a peak power measurement, compliance with the one Watt limit can be based on a measurement of the maximum conducted output power. For smart system, Maximum Conducted Output Power is defined as the total transmit power delivered to all antennas and antenna elements averaged across all symbols in the signaling alphabet when the transmitter is operating at its maximum power control level. Power must be summed across all antennas and antenna elements. If multiple modes of operation are possible (e.g., alternative modulation methods), the maximum conducted output power is the highest total transmit power occurring in any mode.
Set the RBW ≧DTS bandwidth(about 1MHz).
Set VBW =3*RBW(about 3MHz)
Set the span ≧3*RBW
Set Sweep time = auto couple.
Set Detector = peak.
Set Trace mode = max hold.
Allow trace to fully stabilize. Use peak marker function to determine the peak amplitude level.
■ According to FCC Part 15.247(b)(4):
Conducted output power limit specified in paragraph (b) of this section is based on the use of antennas with directional gains that do not exceed 6 dBi. If transmitting antennas of directional gain greater than 6 dBi are used, the conducted output power from the intentional radiator shall be reduced below the stated values in paragraphs (b)(3) of this section, as appropriate, by the amount in dB that the directional gain of the antenna exceeds 6 dBi.

Test Results

Temperature:	26° C
Relative Humidity:	54%
ATM Pressure:	1011 mbar

Operation Mode	Channel Number	Channel Frequency (MHz)	Measurement Level (dBm)	Limit (dBm)	Verdict
BLE	0	2402	-4.317	30	PASS
	19	2440	-2.312	30	PASS
	39	2480	-0.834	30	PASS

Test Model	Maximum Conducted Output Power	
	BLE	
	Channel 0: 2402MHz	GFSK modulation

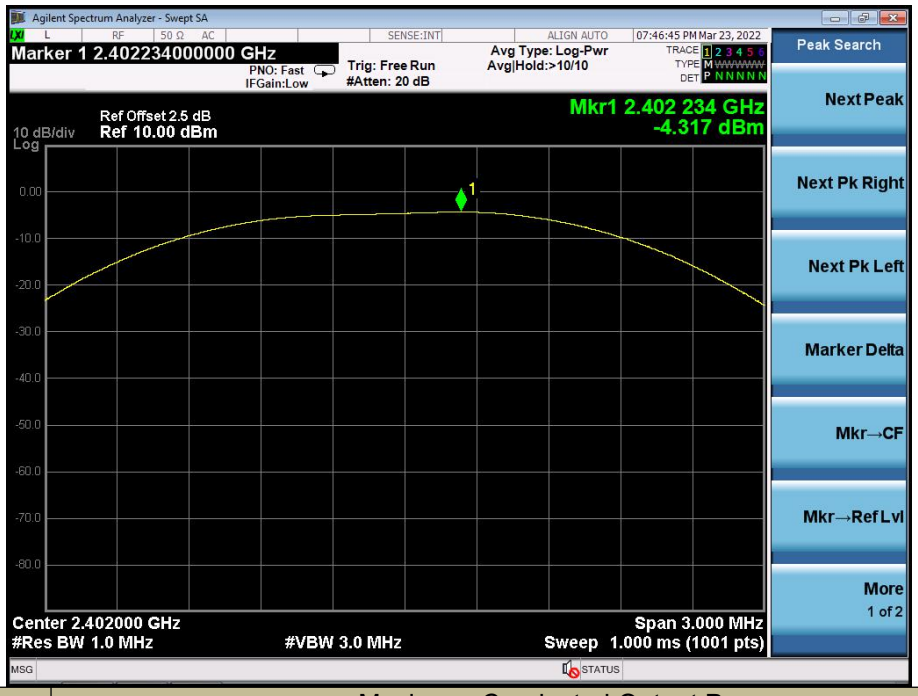

Test Model	Maximum Conducted Output Power	
	BLE	
	Channel 19: 2440MHz	GFSK modulation

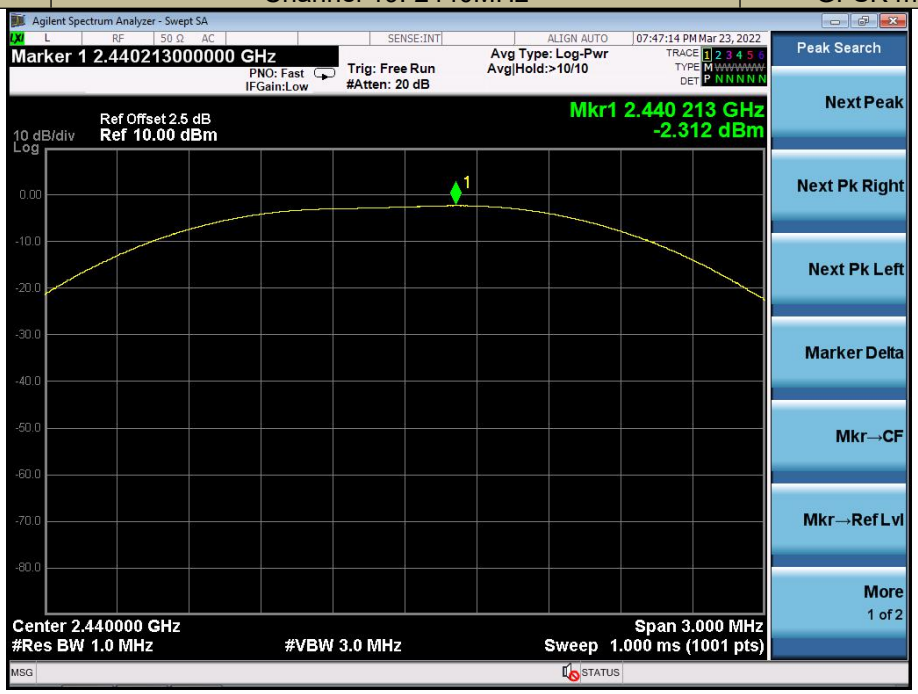

Test Model	Maximum Conducted Output Power	
	BLE	
	Channel 39: 2480MHz	GFSK modulation

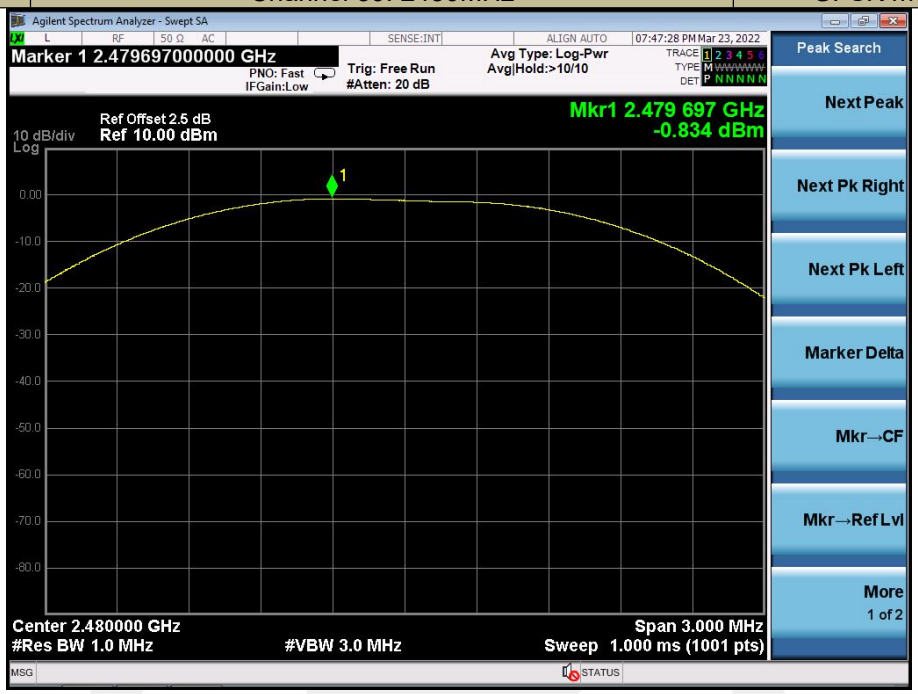

8.3 MAXIMUM POWER SPECTRAL DENSITY

8.3.1 Applicable Standard

According to FCC Part 15.247(e) and KDB 558074 D01 15.247 Meas Guidance v05r02

8.3.2 Conformance Limit

The transmitter power spectral density conducted from the transmitter to the antenna shall not be greater than 8 dBm in any 3 kHz band during any time interval of continuous transmission.

8.3.3 Test Configuration

Test according to clause 7.1 radio frequency test setup 1

8.3.4 Test Procedure

This procedure shall be used if maximum peak conducted output power was used to demonstrate compliance
The transmitter output (antenna port) was connected to the spectrum analyzer
Set analyzer center frequency to DTS channel center frequency.
Set the span to 1.5 times the DTS bandwidth.
Set the RBW to: 3 kHz
Set the VBW to: 10 kHz.
Set Detector = peak.
Set Sweep time = auto couple.
Set Trace mode = max hold.
Allow trace to fully stabilize.
Use the peak marker function to determine the maximum amplitude level within the RBW.

8.3.5 Test Results

Temperature:	26° C
Relative Humidity:	54%
ATM Pressure:	1011 mbar

Operation Mode	Channel Number	Channel Frequency (MHz)	Measurement Level (dBm/3kHz)	Limit (dBm/3kHz)	Verdict
BLE	0	2402	-20.385	<8	PASS
	19	2440	-18.397	<8	PASS
	39	2480	-16.899	<8	PASS
Note: N/A					

Test Model	Power Spectral Density BLE Channel 0: 2402MHz

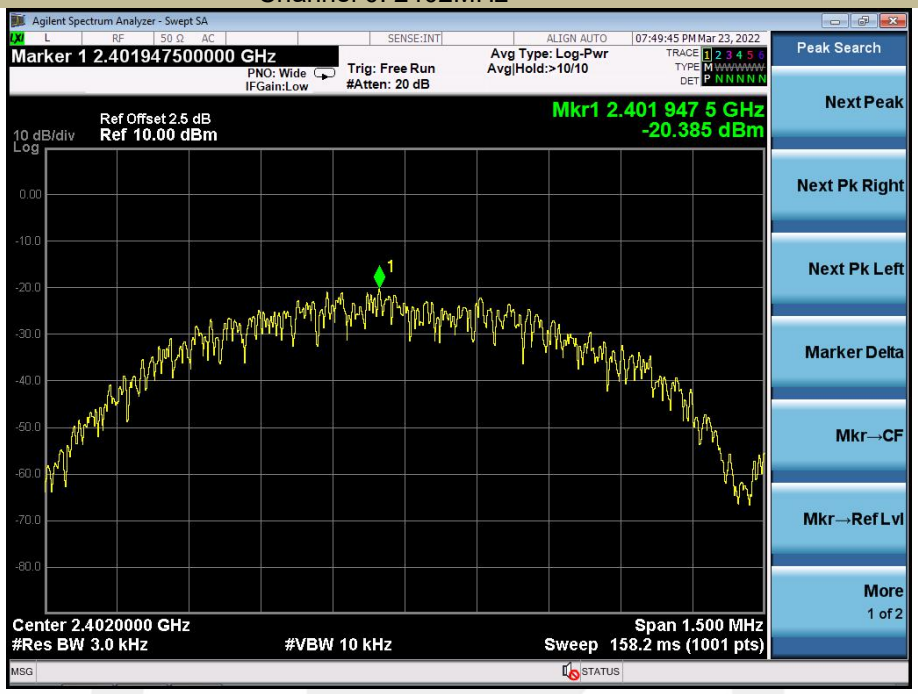

Test Model	Power Spectral Density BLE Channel 19: 2440MHz

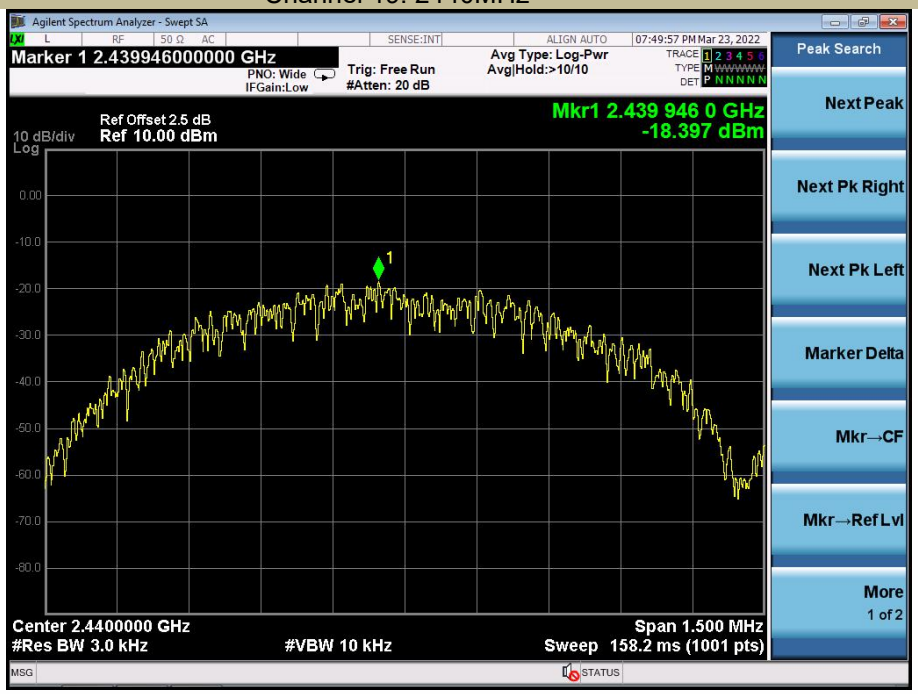

Test Model	Power Spectral Density BLE Channel 39: 2480MHz

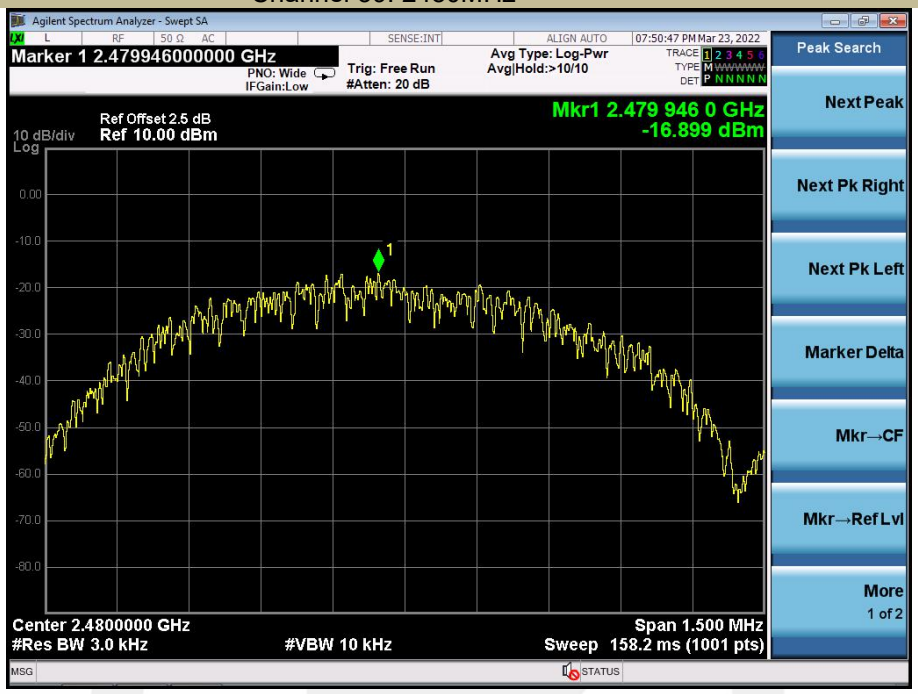

8.4 UNWANTED EMISSIONS IN NON-RESTRICTED FREQUENCY BANDS

8.4.1 Applicable Standard

According to FCC Part 15.247(d) and KDB 558074 D01 15.247 Meas Guidance v05r02

8.4.2 Conformance Limit

According to FCC Part 15.247(d):
In any 100 kHz bandwidth outside the frequency band in which the spread spectrum or digitally modulated intentional radiator is operating, the radio frequency power that is produced by the intentional radiator shall be at least 20 dB below that in the 100 kHz bandwidth within the band that contains the highest level of the desired power, based on either an RF conducted or a radiated measurement, provided the transmitter demonstrates compliance with the peak conducted power limits. If the transmitter complies with the conducted power limits based on the use of RMS averaging over a time interval, as permitted under paragraph (b)(3) of this section, the attenuation required under this paragraph shall be 30 dB instead of 20 dB.

8.4.3 Test Configuration

Test according to clause 7.1 radio frequency test setup 1

8.4.4 Test Procedure

The transmitter output (antenna port) was connected to the spectrum analyzer

- **Reference level measurement**

Establish a reference level by using the following procedure:
Set instrument center frequency to DTS channel center frequency.
Set the span to = 1.5 times the DTS bandwidth.
Set the RBW = 100 kHz.
Set the VBW ≥ 3 x RBW.
Set Detector = peak.
Set Sweep time = auto couple.
Set Trace mode = max hold.
Allow trace to fully stabilize.
Use the peak marker function to determine the maximum PSD level.
Note that the channel found to contain the maximum PSD level can be used to establish the reference level.

- **Emission level measurement**

Set the center frequency and span to encompass frequency range to be measured.
Set the RBW = 100 kHz.
Set the VBW =300 kHz.
Set Detector = peak
Sweep time = auto couple.
Trace mode = max hold.
Allow trace to fully stabilize.
Use the peak marker function to determine the maximum amplitude level.
Ensure that the amplitude of all unwanted emissions outside of the authorized frequency band (excluding restricted frequency bands) are attenuated by at least the minimum requirements . Report the three highest emissions relative to the limit.

8.4.5 Test Results

Temperature:	26° C
Relative Humidity:	54%
ATM Pressure:	1011 mbar

Test Model	PSD(Power Spectral Density) RBW=100kHz BLE Channel 0: 2402MHz

Test Model	Unwanted Emissions in non-restricted frequency bands BLE Channel 0: 2402MHz

Test Model	Band edge BLE Channel 0: 2402MHz

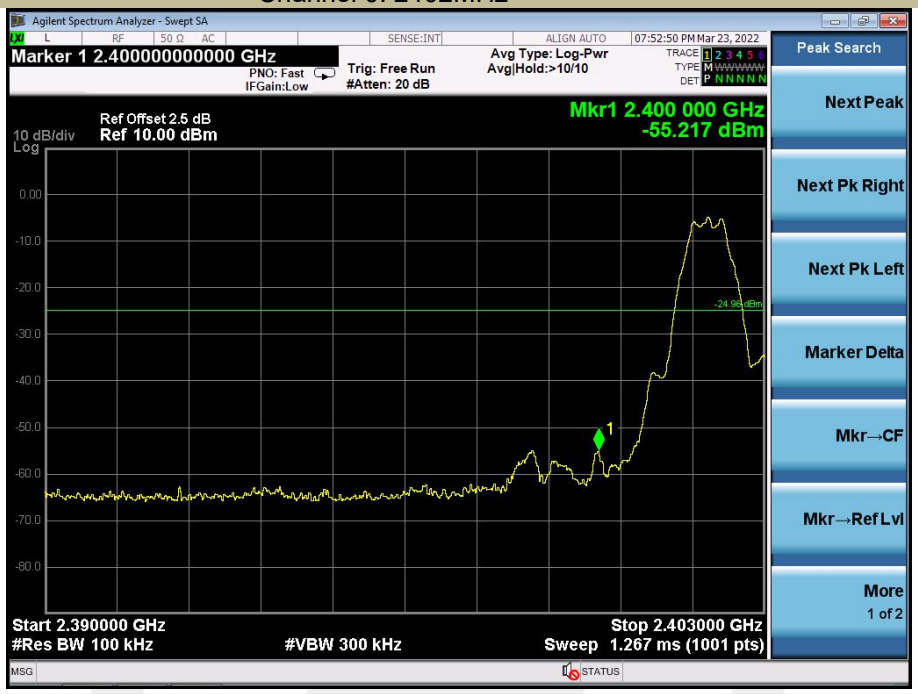

Test Model	PSD(Power Spectral Density) RBW=100kHz BLE Channel 19: 2440MHz

Test Model	Unwanted Emissions In Non-Restricted Frequency Bands BLE Channel 19: 2440MHz

Test Model	PSD(Power Spectral Density) RBW=100kHz BLE Channel 19: 2480MHz

Test Model	Unwanted Emissions In Non-Restricted Frequency Bands BLE Channel 39: 2480MHz

Test Model	Band edge BLE Channel 39: 2480MHz

8.5 RADIATED SPURIOUS EMISSION

8.5.1 Applicable Standard

According to FCC Part 15.247(d) and 15.209 and KDB 558074 D01 15.247 Meas Guidance v05r02

8.5.2 Conformance Limit

According to FCC Part 15.247(d): radiated emissions which fall in the restricted bands, as defined in §15.205(a), must also comply with the radiated emission limits specified in §15.209(a) (see §15.205(c)).
According to FCC Part15.205, Restricted bands

MHz	MHz	MHz	GHz
0.090-0.110	16.42-16.423	399.9-410	4.5-5.15
10.495-0.505	16.69475-16.69525	608-614	5.35-5.46
2.1735-2.1905	16.80425-16.80475	960-1240	7.25-7.75
4.125-4.128	25.5-25.67	1300-1427	8.025-8.5
4.17725-4.17775	37.5-38.25	1435-1626.5	9.0-9.2
4.20725-4.20775	73-74.6	1645.5-1646.5	9.3-9.5
6.215-6.218	74.8-75.2	1660-1710	10.6-12.7
6.26775-6.26825	123-138	2200-2300	14.47-14.5
8.291-8.294	149.9-150.05	2310-2390	15.35-16.2
8.362-8.366	156.52475-156.52525	2483.5-2500	17.7-21.4
8.37625-8.38675	156.7-156.9	2690-2900	22.01-23.12
8.41425-8.41475	162.0125-167.17	3260-3267	23.6-24.0
12.29-12.293	167.72-173.2	3332-3339	31.2-31.8
12.51975-12.52025	240-285	3345.8-3358	36.43-36.5
12.57675-12.57725	322-335.4	3600-4400	(2)
13.36-13.41			

According to FCC Part15.205, the level of any transmitter spurious emission in Restricted bands shall not exceed the level of the emission specified in the following table

Restricted Frequency(MHz)	Field Strength (μV/m)	Field Strength (dBμV/m)	Measurement Distance
0.009-0.490	2400/F(KHz)	20 log (uV/m)	300
0.490-1.705	2400/F(KHz)	20 log (uV/m)	30
1.705-30	30	29.5	30
30-88	100	40	3
88-216	150	43.5	3
216-960	200	46	3
Above 960	500	54	3

8.5.3 Test Configuration

Test according to clause 7.2 radio frequency test setup 2

8.5.4 Test Procedure

This test is required for any spurious emission that falls in a Restricted Band, as defined in Section 15.205. It must be performed with the highest gain of each type of antenna proposed for use with the EUT. Use the following spectrum analyzer settings:
The EUT was placed on a turn table which is 0.8m above ground plane.
Maximum procedure was performed on the highest emissions to ensure EUT compliance.
Span = wide enough to fully capture the emission being measured
RBW = 1 MHz for f ≥ 1 GHz(1GHz to 25GHz), 100 kHz for f < 1 GHz(30MHz to 1GHz)
VBW ≥ RBW

Sweep = auto
Detector function = peak
Trace = max hold
Follow the guidelines in ANSI C63.10-2013 with respect to maximizing the emission by rotating the EUT, measuring the emission while the EUT is situated in three orthogonal planes (if appropriate), adjusting the measurement antenna height and polarization, etc. A pre-amp and a high pass filter are required for this test, in order to provide the measuring system with sufficient sensitivity. Allow the trace to stabilize. The peak reading of the emission, after being corrected by the antenna factor, cable loss, pre-amp gain, etc., is the peak field strength, which must comply with the limit specified in Section 15.35(b). Submit this data.
Now set the VBW to 10 Hz, while maintaining all of the other instrument settings. This peak level, once corrected, must comply with the limit specified in Section 15.209. If the dwell time per channel of the hopping signal is less than 100 ms, then the reading obtained with the 10 Hz VBW may be further adjusted by a "duty cycle correction factor", derived from 20log(dwell time/100 ms), in an effort to demonstrate compliance with the 15.209 limit. Submit this data.
Repeat above procedures until all frequency measured was complete.

8.5.5 Test Results

Temperature:	26° C
Relative Humidity:	54%
ATM Pressure:	1011 mbar

■ Spurious Emission below 30MHz (9KHz to 30MHz)

Freq. (MHz)	Ant.Pol.	Emission Level(dBuV/m)		Limit 3m(dBuV/m)		Over(dB)	
	H/V	PK	AV	PK	AV	PK	AV
--	--	--	--	--	--	--	--

Note: the amplitude of spurious emission that is attenuated by more than 20dB below the permissible limit has no need to be reported.
Distance extrapolation factor =40log(Specific distance/ test distance)(dB);
Limit line=Specific limits(dBuV) + distance extrapolation factor

■ Spurious Emission Above 1GHz (1GHz to 25GHz)

BLE mode have been tested, and the worst result was report as below:

Test mode:	BLE	Frequency:	Channel 0: 2402MHz

Freq. (MHz)	Ant.Pol.	Emission Level(dBuV/m)	Limit 3m(dBuV/m)	Over(dB)	Detector
5313.237	V	45.63	74.00	-28.37	peak
5313.237	V	29.15	54.00	-24.85	AVG
11854.56	V	54.56	74.00	-19.44	peak
11854.56	V	36.93	54.00	-17.07	AVG
17867.82	V	64.27	74.00	-9.73	peak
17867.82	V	46.28	54.00	-7.72	AVG
5406.184	H	44.45	74.00	-29.55	peak
5406.184	H	26.87	54.00	-27.13	AVG
11400.90	H	54.31	74.00	-19.69	peak
11400.90	H	36.95	54.00	-17.05	AVG
17787.95	H	64.35	74.00	-9.65	peak
17787.95	H	46.88	54.00	-7.12	AVG

Test mode:	BLE	Frequency:	Channel 19: 2440MHz

Freq. (MHz)	Ant.Pol.	Emission Level(dBuV/m)	Limit 3m(dBuV/m)	Over(dB)	Detector
5828.113	V	46.01	74.00	-27.99	peak
5828.113	V	29.08	54.00	-24.92	AVG
10289.09	V	52.72	74.00	-21.28	peak
10289.09	V	34.22	54.00	-19.78	AVG
18000.00	V	64.85	74.00	-9.15	peak
18000	V	46.57	54.00	-7.43	AVG
6348.688	H	46.74	74.00	-27.26	peak
6348.688	H	28.57	54.00	-25.43	AVG
11387.73	H	54.55	74.00	-19.45	peak
11387.73	H	36.95	54.00	-17.05	AVG
17834.28	H	64.12	74.00	-9.88	peak
17834.28	H	46.93	54.00	-7.07	AVG

Test mode:	BLE	Frequency:	Channel 39: 2480MHz

Freq. (MHz)	Ant.Pol.	Emission Level(dBuV/m)	Limit 3m(dBuV/m)	Over(dB)	Detector
5670.258	V	45.75	74.00	-28.25	peak
5670.258	V	29.14	54.00	-24.86	AVG
11409.14	V	54.50	74.00	-19.50	peak
11409.14	V	36.28	54.00	-17.72	AVG
17937.67	V	64.44	74.00	-9.56	peak
17937.67	V	46.38	54.00	-7.62	AVG
5387.466	H	44.60	74.00	-29.40	peak
5387.466	H	26.55	54.00	-27.45	AVG
11422.34	H	54.46	74.00	-19.54	peak
11422.34	H	36.84	54.00	-17.16	AVG
17948.04	H	64.12	74.00	-9.88	peak
17948.04	H	46.36	54.00	-7.64	AVG

Note: (1) All Readings are Peak Value (VBW=3MHz) and Peak Value (VBW=10Hz).
(2) Emission Level= Reading Level+Correct Factor +Cable Loss.
(3) Correct Factor= Ant_F + Cab_L - Preamp
(4)Data of measurement within this frequency range shown " -- " in the table above means the reading of emissions are attenuated more than 20dB below the permissible limits or the field strength is too small to be measured.

■ Spurious Emission in Restricted Band 2310-2390MHz and 2483.5-2500MHz

Test mode:	BLE	Frequency:	Channel 0: 2402MHz

Freq. (MHz)	Ant.Pol.	Emission Level(dBuV/m)	Limit 3m(dBuV/m)	Over(dB)	Detector
2389.136	V	51.32	74.00	-22.68	peak
2389.136	V	33.84	54.00	-20.16	AVG
2388.924	H	50.87	74.00	-23.13	peak
2388.924	H	32.74	54.00	-21.26	AVG

Test mode:	BLE	Frequency:	Channel 39: 2480MHz

Freq. (MHz)	Ant.Pol.	Emission Level(dBuV/m)	Limit 3m(dBuV/m)	Over(dB)	Detector
2484.081	V	50.32	74.00	-23.68	peak
2484.081	V	33.24	54.00	-20.76	AVG
2484.087	H	50.09	74.00	-23.91	peak
2484.087	H	32.57	54.00	-21.43	AVG

Note: (1) All Readings are Peak Value (VBW=3MHz) and Peak Value (VBW=10Hz).
(2) Emission Level= Reading Level+Correct Factor +Cable Loss.
(3) Correct Factor= Ant_F + Cab_L - Preamp
(4) Data of measurement within this frequency range shown " -- " in the table above means the reading of emissions are attenuated more than 20dB below the permissible limits or the field strength is too small to be measured.

All the modulation modes were tested, the data of the worst mode are described in the following table

Test Model	Spurious Emission in Restricted Band 2310-2390MHz BLE Channel 0: 2402MHz	H

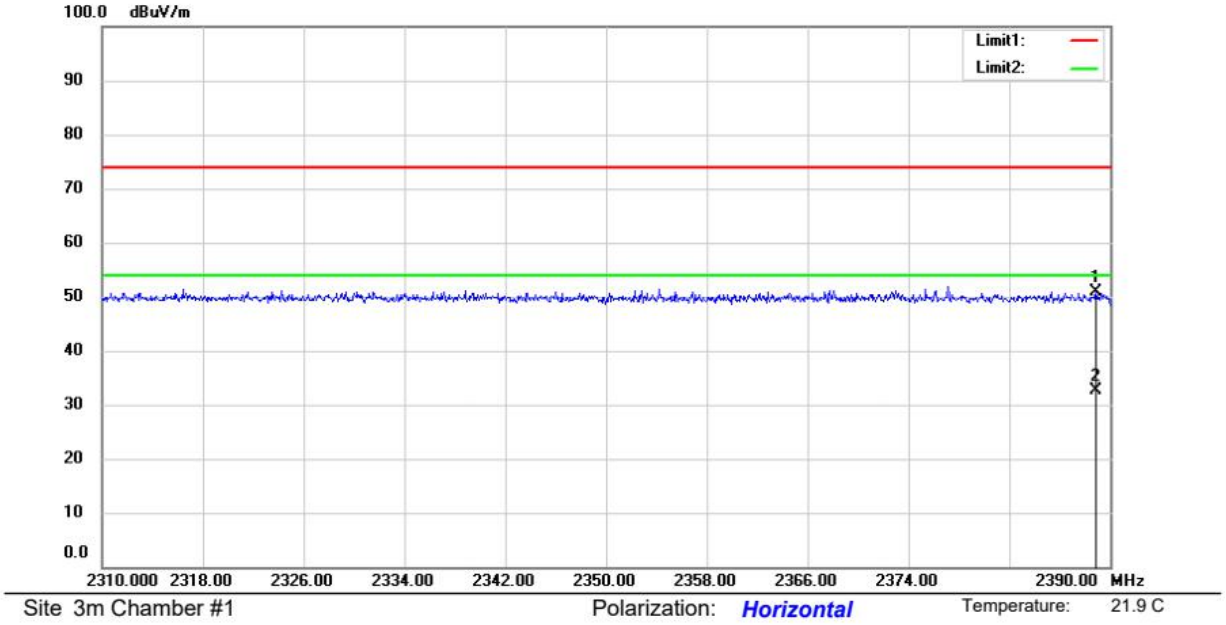

Test Model	Spurious Emission in Restricted Band 2310-2390MHz BLE Channel 0: 2402MHz	V

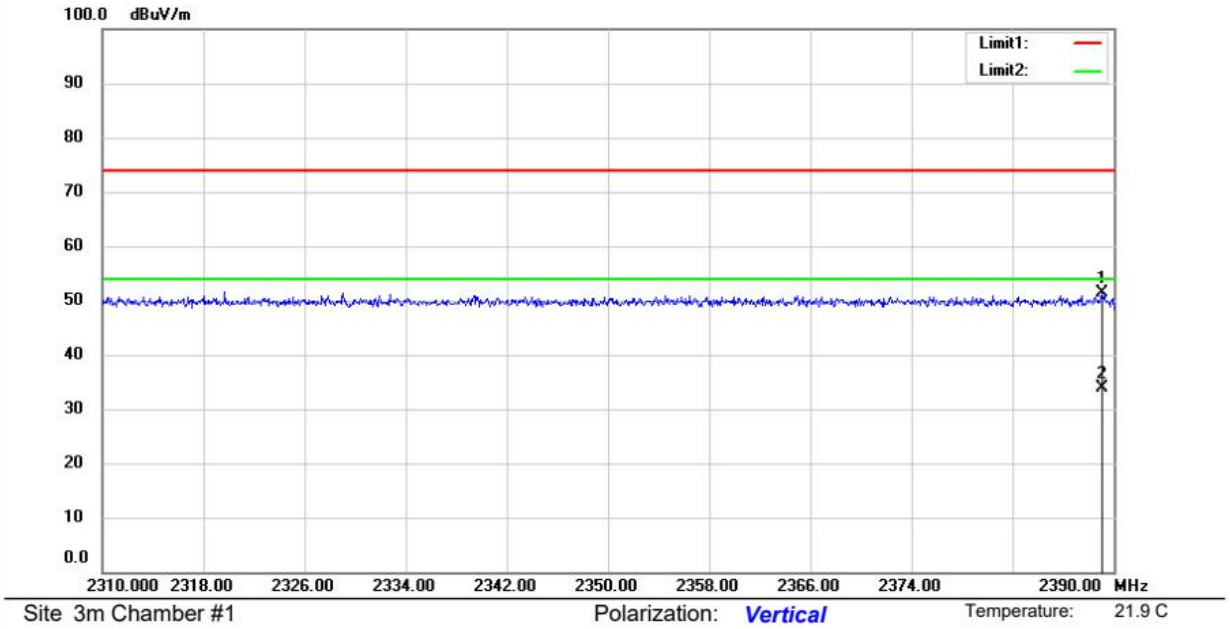

Test Model	Spurious Emission in Restricted Band 2483.5-2500MHz BLE Channel 39: 2480MHz	H

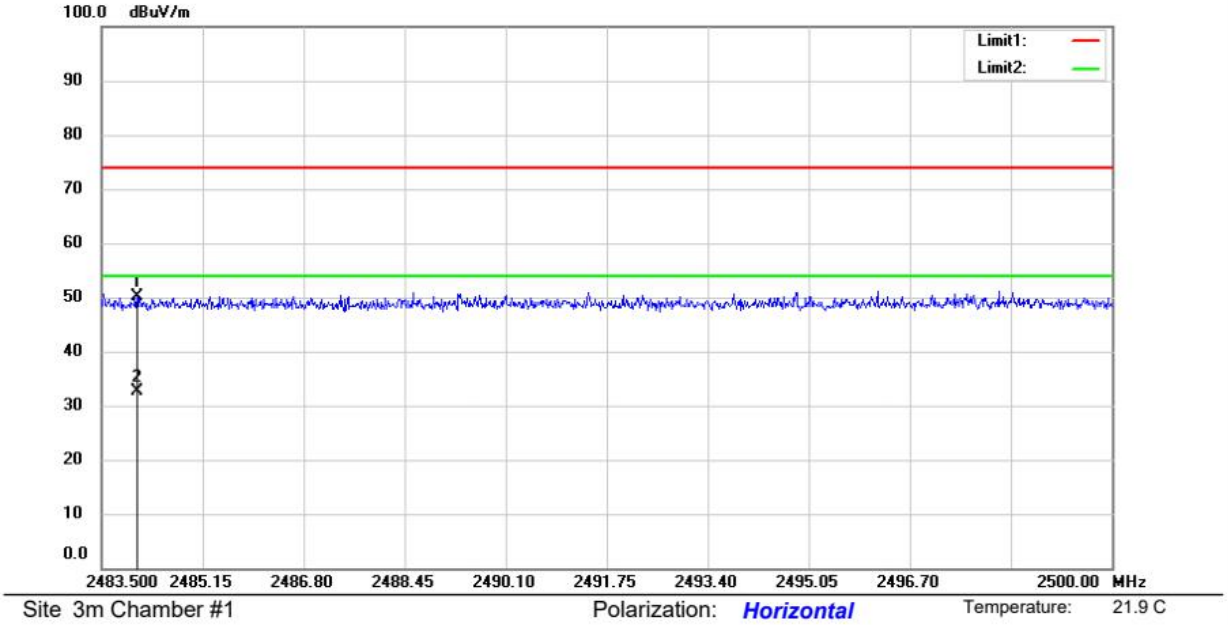

Test Model	Spurious Emission in Restricted Band 2483.5-2500MHz BLE Channel 39: 2480MHz	V

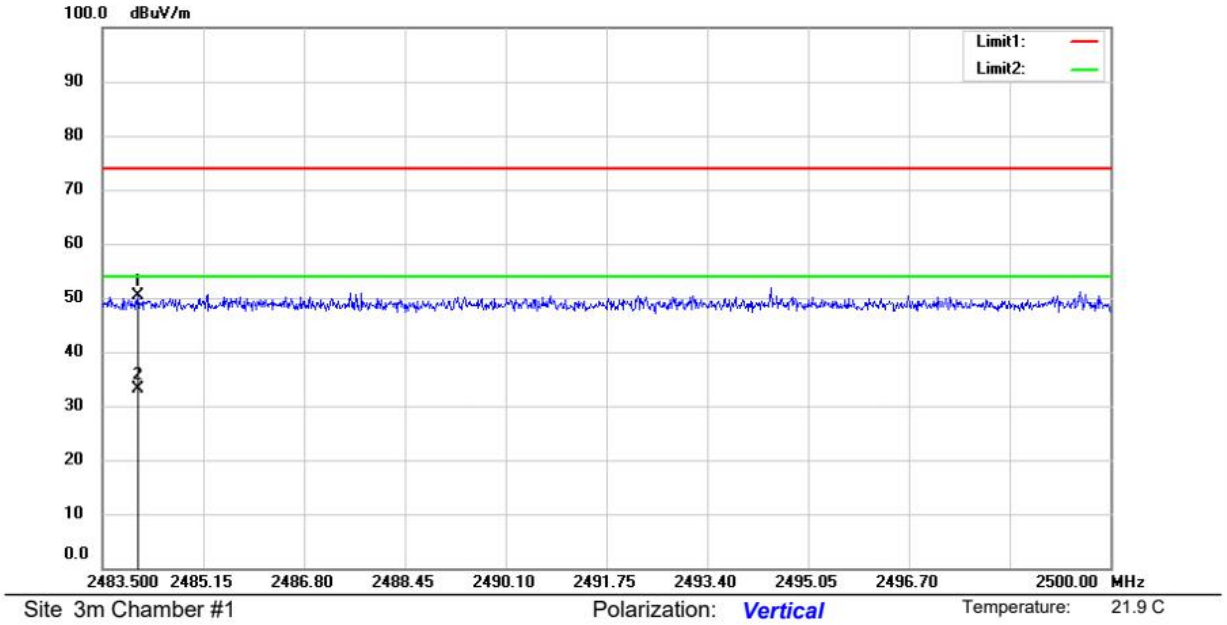

■ Spurious Emission below 1GHz (30MHz to 1GHz)

All modes have been tested, and the worst result recorded was report as below:

Test mode:	BLE	Frequency:	Channel 0: 2402MHz

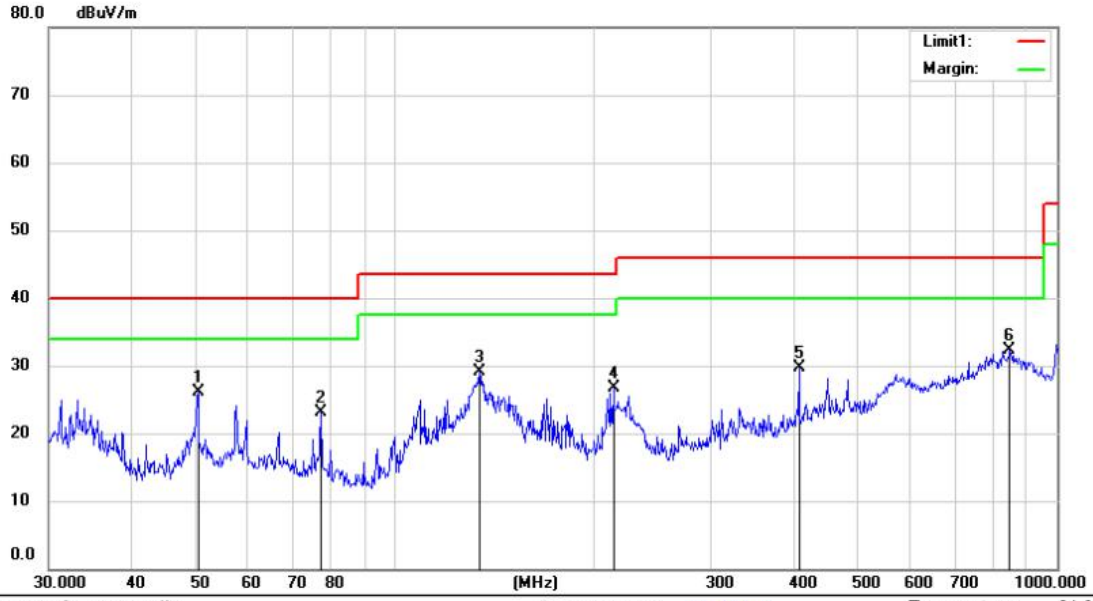

Site 3m Chamber #1 Polarization: *Vertical* Temperature: 21.9 C

No.	Mk.	Freq.	Reading Level	Correct Factor	Measure-ment	Limit	Over		Antenna Height	Table Degree	
		MHz	dBuV	dB	dBuV/m	dBuV/m	dB	Detector	cm	degree	Comment
1		50.4310	38.04	-11.96	26.08	40.00	-13.92	QP			
2		77.4908	37.62	-14.56	23.06	40.00	-16.94	QP			
3		134.5002	43.37	-14.20	29.17	43.50	-14.33	QP			
4		214.3263	40.11	-13.32	26.79	43.50	-16.71	QP			
5		408.0507	35.89	-6.24	29.65	46.00	-16.35	QP			
6	*	849.9170	29.37	2.92	32.29	46.00	-13.71	QP			

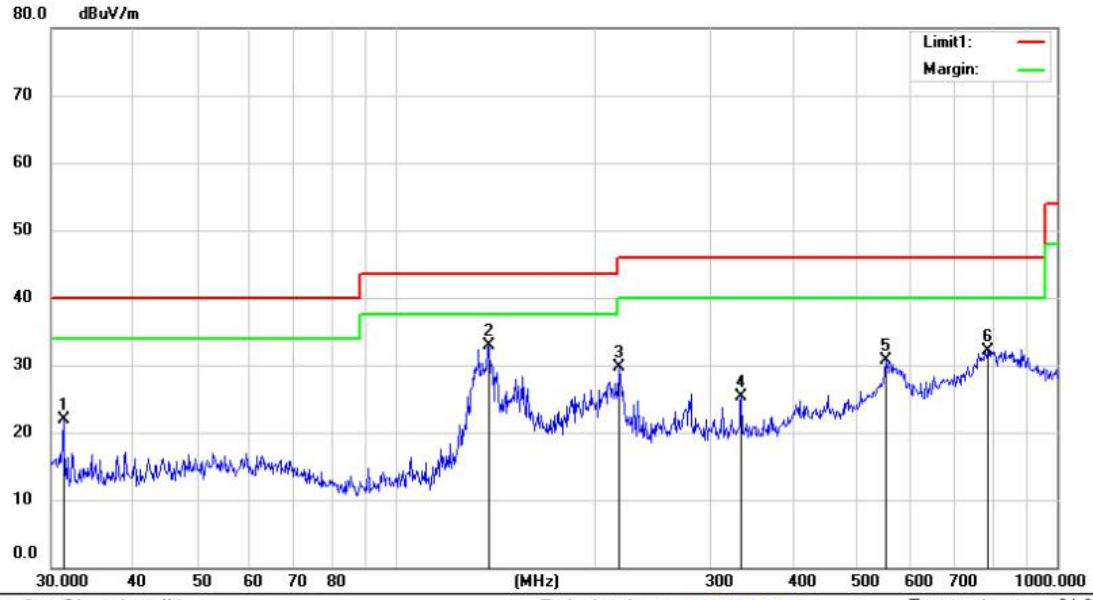

Site 3m Chamber #1 Polarization: ***Horizontal*** Temperature: 21.9 C

No.	Mk.	Freq.	Reading Level	Correct Factor	Measure-ment	Limit	Over		Antenna Height	Table Degree	
		MHz	dBuV	dB	dBuV/m	dBuV/m	dB	Detector	cm	degree	Comment
1		31.3167	36.48	-14.50	21.98	40.00	-18.02	QP			
2	*	138.3267	47.34	-14.36	32.98	43.50	-10.52	QP			
3		218.0216	42.83	-13.22	29.61	46.00	-16.39	QP			
4		333.3943	33.48	-8.10	25.38	46.00	-20.62	QP			
5		552.1568	34.68	-3.98	30.70	46.00	-15.30	QP			
6		786.4712	30.47	1.56	32.03	46.00	-13.97	QP			

Test mode:	BLE	Frequency:	Channel 19: 2440MHz

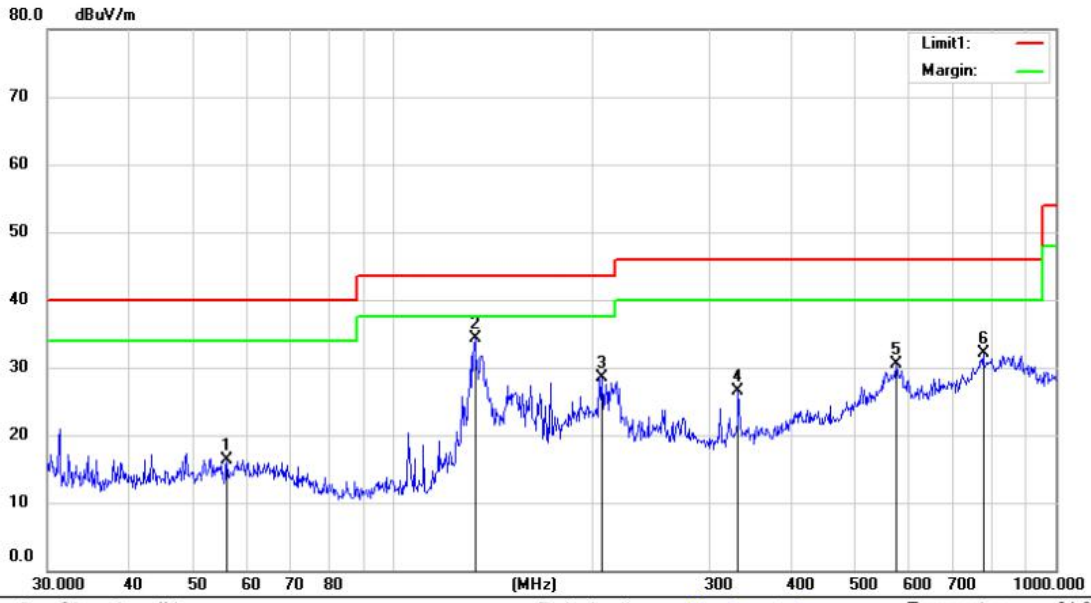

Site 3m Chamber #1 Polarization: ***Horizontal*** Temperature: 21.9 C

No.	Mk.	Freq.	Reading Level	Correct Factor	Measure-ment	Limit	Over		Antenna Height	Table Degree	
		MHz	dBuV	dB	dBuV/m	dBuV/m	dB	Detector	cm	degree	Comment
1		56.1236	28.43	-12.03	16.40	40.00	-23.60	QP			
2	*	132.9178	48.45	-14.21	34.24	43.50	-9.26	QP			
3		206.7598	42.15	-13.61	28.54	43.50	-14.96	QP			
4		332.0817	34.74	-8.17	26.57	46.00	-19.43	QP			
5		575.1298	34.09	-3.51	30.58	46.00	-15.42	QP			
6		778.5823	30.86	1.25	32.11	46.00	-13.89	QP			

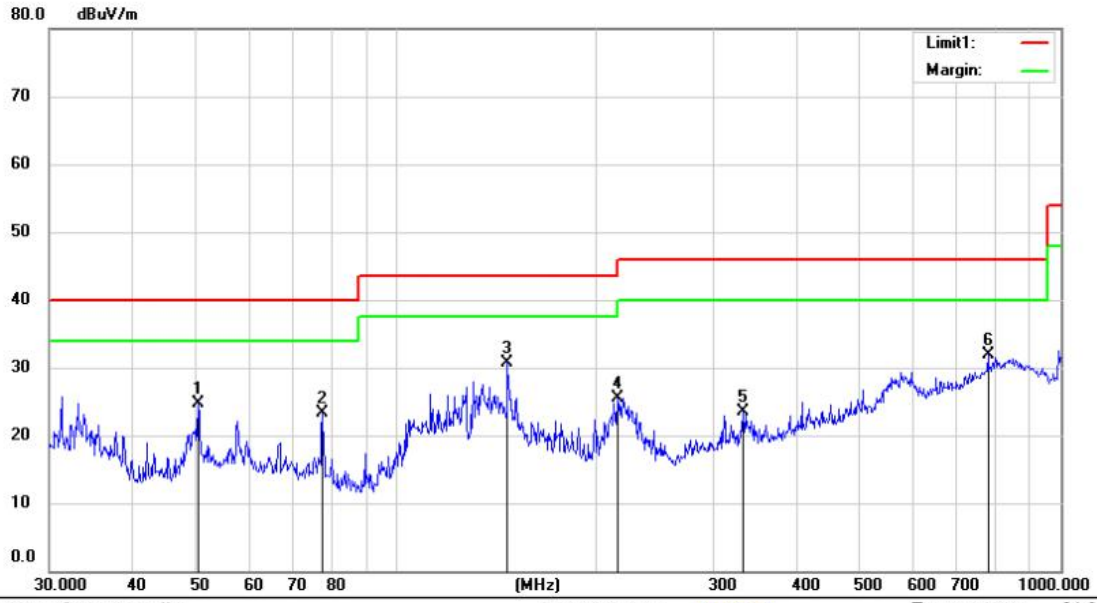

Site 3m Chamber #1 Polarization: ***Vertical*** Temperature: 21.9 C

No.	Mk.	Freq.	Reading Level	Correct Factor	Measure-ment	Limit	Over		Antenna Height	Table Degree	
		MHz	dBuV	dB	dBuV/m	dBuV/m	dB	Detector	cm	degree	Comment
1		50.3427	36.62	-11.97	24.65	40.00	-15.35	QP			
2		77.3551	37.93	-14.54	23.39	40.00	-16.61	QP			
3	*	147.1454	44.81	-14.01	30.80	43.50	-12.70	QP			
4		215.5511	38.84	-13.29	25.55	43.50	-17.95	QP			
5		333.2482	31.58	-8.11	23.47	46.00	-22.53	QP			
6		778.2411	30.70	1.24	31.94	46.00	-14.06	QP			

Test mode:	BLE	Frequency:	Channel 39: 2480MHz

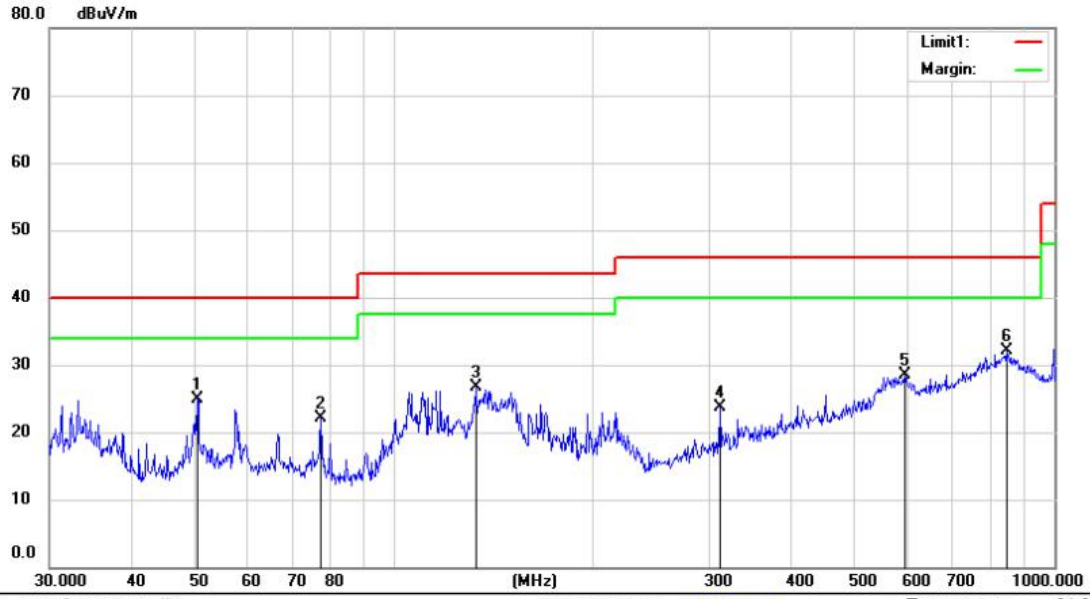

Site 3m Chamber #1 Polarization: *Vertical* Temperature: 21.9 C

No.	Mk.	Freq.	Reading Level	Correct Factor	Measure-ment	Limit	Over		Antenna Height	Table Degree	
		MHz	dBuV	dB	dBuV/m	dBuV/m	dB	Detector	cm	degree	Comment
1		50.2986	36.95	-11.97	24.98	40.00	-15.02	QP			
2		77.4230	36.70	-14.55	22.15	40.00	-17.85	QP			
3		132.9761	40.97	-14.21	26.76	43.50	-16.74	QP			
4		312.0426	32.83	-9.11	23.72	46.00	-22.28	QP			
5		594.0904	31.63	-3.14	28.49	46.00	-17.51	QP			
6	*	847.6847	29.14	2.91	32.05	46.00	-13.95	QP			

Site 3m Chamber #1 Polarization: ***Horizontal*** Temperature: 21.9 C

No.	Mk.	Freq.	Reading Level	Correct Factor	Measure-ment	Limit	Over		Antenna Height	Table Degree	
		MHz	dBuV	dB	dBuV/m	dBuV/m	dB	Detector	cm	degree	Comment
1		31.3305	35.64	-14.50	21.14	40.00	-18.86	QP			
2	*	133.1511	47.67	-14.21	33.46	43.50	-10.04	QP			
3		210.0482	45.33	-13.44	31.89	43.50	-11.61	QP			
4		331.5000	33.22	-8.20	25.02	46.00	-20.98	QP			
5		570.1100	33.87	-3.57	30.30	46.00	-15.70	QP			
6		821.3503	29.87	2.05	31.92	46.00	-14.08	QP			

8.6 CONDUCTED EMISSIONS TEST

8.6.1 Applicable Standard

According to FCC Part 15.207(a)

8.6.2 Conformance Limit

Conducted Emission Limit		
Frequency(MHz)	Quasi-peak	Average
0.15-0.5	66-56	56-46
0.5-5.0	56	46
5.0-30.0	60	50

Note: 1. The lower limit shall apply at the transition frequencies
2. The limit decreases in line with the logarithm of the frequency in the range of 0.15 to 0.50MHz.

8.6.3 Test Configuration

Test according to clause 7.3 conducted emission test setup

8.6.4 Test Procedure

The EUT was placed on a table which is 0.8m above ground plane.
Maximum procedure was performed on the highest emissions to ensure EUT compliance.
Repeat above procedures until all frequency measured were complete.

8.6.5 Test Results

Pass

The 120V &240V voltagehave been tested, and the worst result recorded was report as below:

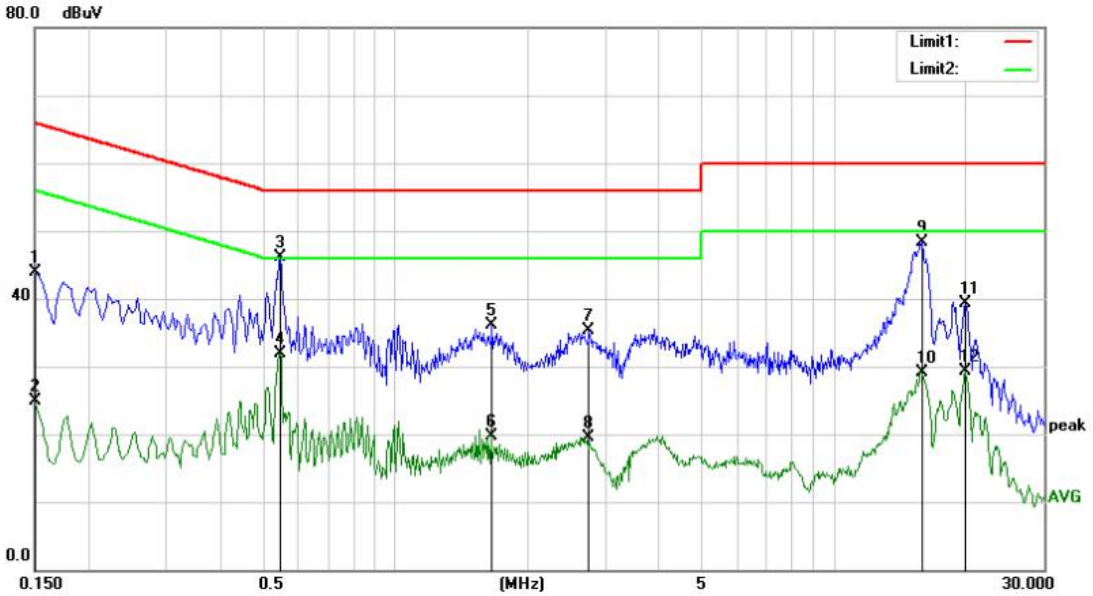

Site Conduction #2 Phase: N Temperature: 25.1

No.	Mk.	Freq.	Reading Level	Correct Factor	Measure-ment	Limit	Over		
		MHz	dBuV	dB	dBuV	dBuV	dB	Detector	Comment
1		0.1500	33.35	10.48	43.83	65.91	-22.08	QP	
2		0.1500	14.39	10.48	24.87	56.00	-31.13	AVG	
3	*	0.5460	35.83	10.35	46.18	56.00	-9.82	QP	
4		0.5460	21.62	10.35	31.97	46.00	-14.03	AVG	
5		1.6540	25.82	10.36	36.18	56.00	-19.82	QP	
6		1.6540	9.28	10.36	19.64	46.00	-26.36	AVG	
7		2.7540	24.91	10.37	35.28	56.00	-20.72	QP	
8		2.7540	9.12	10.37	19.49	46.00	-26.51	AVG	
9		15.8220	37.50	10.71	48.21	60.00	-11.79	QP	
10		15.8220	18.38	10.71	29.09	50.00	-20.91	AVG	
11		19.9220	28.48	10.76	39.24	60.00	-20.76	QP	
12		19.9220	18.48	10.76	29.24	50.00	-20.76	AVG	

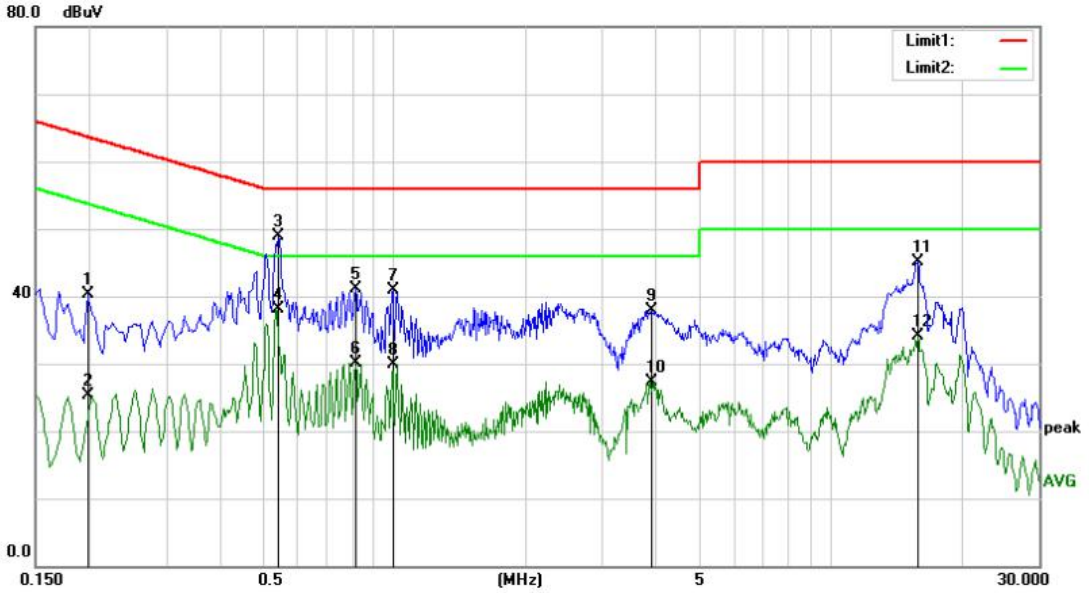

Site Conduction #2 Phase: *L1* Temperature: 25.1

No.	Mk.	Freq.	Reading Level	Correct Factor	Measure-ment	Limit	Over		
		MHz	dBuV	dB	dBuV	dBuV	dB	Detector	Comment
1		0.1980	29.86	10.43	40.29	63.63	-23.34	QP	
2		0.1980	14.89	10.43	25.32	53.69	-28.37	AVG	
3	*	0.5420	38.50	10.35	48.85	56.00	-7.15	QP	
4		0.5420	27.84	10.35	38.19	46.00	-7.81	AVG	
5		0.8140	30.76	10.37	41.13	56.00	-14.87	QP	
6		0.8140	19.66	10.37	30.03	46.00	-15.97	AVG	
7		0.9900	30.45	10.42	40.87	56.00	-15.13	QP	
8		0.9900	19.58	10.42	30.00	46.00	-16.00	AVG	
9		3.8980	27.48	10.44	37.92	56.00	-18.08	QP	
10		3.8980	16.85	10.44	27.29	46.00	-18.71	AVG	
11		15.8540	34.35	10.72	45.07	60.00	-14.93	QP	
12		15.8540	23.33	10.72	34.05	50.00	-15.95	AVG	

8.7 ANTENNA APPLICATION

8.7.1 Antenna Requirement

Standard	Requirement
FCC CRF Part 15.203	An intentional radiator shall be designed to ensure that no antenna other than that furnished by the responsible party shall be used with the device. The use of a permanently attached antenna or of an antenna that uses a unique coupling to the intentional radiator shall be considered sufficient to comply with the provisions of this section. The manufacturer may design the unit so that a broken antenna can be replaced by the user, but the use of a standard antenna jack or electrical connector is prohibited. This requirement does not apply to carrier current devices or to devices operated under the provisions of §15.211, §15.213, §15.217, §15.219, or §15.221. Further, this requirement does not apply to intentional radiators that must be professionally installed, such as perimeter protection systems and some field disturbance sensors, or to other intentional radiators which, in accordance with §15.31(d), must be measured at the installation site. However, the installer shall be responsible for ensuring that the proper antenna is employed so that the limits in this part are not exceeded.

For intentional device, according to FCC 47 CFR Section 15.203, an intentional radiator shall be designed to ensure that no antenna other than that furnished by the responsible party shall be used with the device. And according to FCC 47 CFR Section 15.247 (b), if transmitting antennas of directional gain greater than 6dBi are used, the power shall be reduced by the amount in dB that the directional gain of the antenna exceeds 6dBi.

8.7.2 Result

PASS.

The EUT is integrated antenna, the antenna gain is 8dBi.

Note:
- ☒ Antenna use a permanently attached antenna which is not replaceable.
- ☐ Not using a standard antenna jack or electrical connector for antenna replacement
- ☐ The antenna has to be professionally installed (please provide method of installation)

which in accordance to section 15.203, please refer to the internal photos.

Detail of factor for radiated emission

Frequency(MHz)	Ant_F(dB)	Cab_L(dB)	Preamp(dB)	Correct Factor(dB)
0.009	20.6	0.03	\	20.63
0.15	20.7	0.1	\	20.8
1	20.9	0.15	\	21.05
10	20.1	0.28	\	20.38
30	18.8	0.45	\	19.25
30	11.7	0.62	27.9	-15.58
100	12.5	1.02	27.8	-14.28
300	12.9	1.91	27.5	-12.69
600	19.2	2.92	27	-4.88
800	21.1	3.54	26.6	-1.96
1000	22.3	4.17	26.2	0.27
1000	25.6	1.76	41.4	-14.04
3000	28.9	3.27	43.2	-11.03
5000	31.1	4.2	44.6	-9.3
8000	36.2	5.95	44.7	-2.55
10000	38.4	6.3	43.9	0.8
12000	38.5	7.14	42.3	3.34
15000	40.2	8.15	41.4	6.95
18000	45.4	9.02	41.3	13.12
18000	37.9	1.81	47.9	-8.19
21000	37.9	1.95	48.7	-8.85
25000	39.3	2.01	42.8	-1.49
28000	39.6	2.16	46.0	-4.24
31000	41.2	2.24	44.5	-1.06
34000	41.5	2.29	46.6	-2.81
37000	43.8	2.30	46.4	-0.3
40000	43.2	2.50	42.2	3.5

--- End of Report ---