User Guide

G&G

GG IMAGE M4100 Series
Monochrome Laser MFP

It is recommended that you read this Guide carefully before using the printer

Preface

Welcome to the GG IMAGE Series products!
We heartily appreciate your using of GG IMAGE Series products!
To protect your vital interests, please carefully read the following statements.

Legal Notice

Trademark

Microsoft®, Windows®, Windows Server® and Windows Vista® are trademarks registered by Microsoft Corporation in the United States or other countries/regions.

Apple, AirPrint and macOS are trademarks of Apple Inc., registered in the U.S. and other countries.Use of the Works with Apple badge means that an accessory has been designed to work specifically with the technology identified in the badge and has been certified by the developer to meet Apple performance standards.

Wi-Fi Direct,Wi-Fi Protected Setup(WPS),WPA,WPA2,and Wi-Fi Protected Access are marks of the Wi-Fi Alliance.

The ownership to the names of the software in this User Guide belongs to their respective companies in accordance with corresponding license agreement, and they are referred for instructions only.

All other product and brand names herein may be the registered trademarks, trademarks or service marks of their respective owners, and they are referred for instructions only.

Copyright

The Copyright of this User Guide is owned by Ninestar Corporation.
It is prohibited to copy, translate, modify and transmit this User Guide by any means or in any form without the prior written consent of Ninestar Corporation.
Version:V1.0

Disclaimer

For a better user experience, Ninestar Corporation. reserves the right to make changes to the User Guide. The information contained herein is subject to change without notice.

Users are responsible for any damages arising from failing to follow this User Guide. Meanwhile, except the express warranty made in the product maintenance manual or service commitment, Ninestar Corporation. does not make any express or implied warranty or guarantee to this User Guide (including composing or words).

Using this product to copy, print, scan certain documents or images or make other forms of operations may be prohibited by the local laws. If you are uncertain about the legality of using this product for certain documents or images, you should consult your legal advisor in advance.

The product can only be used safely in the non-tropical areas at an altitude no higher than 2000 meters.

Safety Precautions

Disconnect the power supply

The product should be placed close to or easily accessible to power sockets, so as to allow easy disconnection of power supply!

Laser Safety

The laser radiation is harmful to the human body. Since laser components are completely sealed in the printer, laser radiation will not leak. To avoid laser radiation, please do not randomly disassemble the printer!

The printer follows the provisions of Class 1 laser products under CFR standard. The printer has a Class III b laser diode, which has no laser radiation leakage among laser components.

The laser components shall complies with the requirements of: U.S. Code of Federal Regulations, 21 CFR 1040, IEC 60825-1.

The following label is attached to the laser components inside the printer:

or

Safety Warning

Please note the following safety warnings before using the printer:

Warning	
There is high-voltage electrode inside the printer. Before cleaning the printer, make sure the power is turned off!	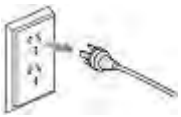
Plugging and unplugging the power cord plug with a wet hand can result in an electric shock.	
The fuser unit is hot when and after printing. Touching the fuser unit (the shaded area as shown) may cause burns!	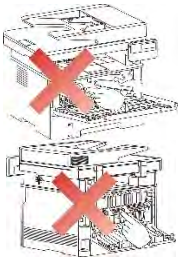
The fuser unit is attached with a high temperature warning label. Please do not remove or damage this label.	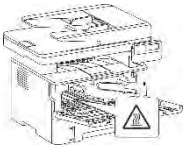

Precautions

Precautions before Using the Printer:

1. Read and understand all instructions.

2. Familiarize yourself with the basic principles associated with operating electrical appliances.

3. Comply with all warnings and instructions marked on the equipment or specified in the manual supplied with the equipment.

4. If the operating instructions conflict with the safety information, please refer back to the safety information, as you may have misunderstood the operating instructions. If you cannot resolve the conflicts, please call the Customer Service Hotline or contact a service representative for help.

5. Before cleaning the equipment, remove the power cord from the AC power supply outlet. Do not use liquid or aerosol cleaners.

6. Please make sure that the equipment is put on a stable desktop surface to avoid serious damage caused by the falling of the equipment.

7. Do not put the equipment near a radiator, an air conditioner, or a ventilation pipe.

8. Do not put any articles on the power cord. Do not put the equipment at the place where its power cord could be stepped on by people.

9. Outlets and extension cords must not be overloaded. This may reduce performance and could result in fire or electric shock.

10. Do not allow pets to chew on the AC power cord or the computer interface cable.

11. Do not allow sharp objects piercing equipment slot, so as to avoid contact with the high-voltage device, which otherwise may result in fire or electric shock. Take care not to spill liquids onto the equipment.

12. Do not disassemble the equipment so as to avoid the risk of electric shock. Necessary repairs may only be carried out by professional maintenance personnel. Opening or removing the cover could result in an electric shock or other potential hazards. Incorrect disassembly and assembly could also result in an electric shock during future use.

13. If any one of the following occurs, disconnect the equipment from the computer and pull out the power cord from the AC wall socket and contact a qualified member of the service personnel for maintenance:

• Liquid has been spilled into the equipment.

• The equipment has been exposed to rain or water.

• The equipment falls, or the cover is damaged.

• Significant changes in the equipment’s performance.

14. Only adjust the control mentioned in the instructions. Incorrect adjustment of other controls may result in damage and mean that professional maintenance personnel need to spend more time fixing it.

15. Do not use the equipment in a thunderstorm so as to avoid the risk of an electric shock. If possible, pull out the AC power cord during a thunderstorm.

16. If you continuously print multiple pages, the surface of the tray will become very hot. Take care not to touch this surface, and keep children away from this surface.

17. The signal wire of the device connected with the printer can not be connected to the outdoors.

18. Please ensure timely ventilation in case of a prolonged use or printing huge amounts of documents in a poorly ventilated room.

19. In standby status, the product will automatically enter into the power saving (sleep) mode if it does not receive any job order for a while (such as 1 minute); and it can realize zero power consumption only if it has not been connected with any external input power supply.

20. As the Class 1 equipment, the product must be connected to the power supply outlet with protective grounding line when using.

21. This product should be placed according to the shipping marks on the product package box during delivery.

22. This product is a kind of low-voltage equipment. When using this product below the specified voltage range,please refer to the product precautions or call GG IMAGE Aftersales Service Centre, if the toner comes off the printed contents, or the equipment starts slowly.

23. This product is sold as a complete machine. The consumers can go to GG IMAGE Aftersales Service Centre to purchase parts they need. If the product sold is inconsistent with the package list, please go to the specified Aftersales Service Centre to solve the problem.

24. Install this product in a place with the temperature between 10℃ and 35℃ and the relative humidity between 20% and 80%.

25. For security and other reasons the printer may switch to intermittent printing after a certain amount of continuous printing.

26. Changes or modification not expressly approved by the party responsible for compliance could void the user's authority to operate the equipment.

27. The power consumption of the product with wireless function is 2.366W /1.888W without wireless function is 1.888W in networked standby if all wired network ports are connected and all wireless network ports are activated.

28. Please keep this User Guide properly.

29. changes or modifications not expressly approved by the party responsible for compliance could void the user's authority to operate the equipment.

30. This equipment has been tested and found to comply with the limits for a Class B digital device, pursuant to Part 15 of the FCC Rules. These limits are designed to provide reasonable protection against harmful interference in a residential installation. This equipment generates, uses and can radiate radio frequency energy and, if not installed and used in accordance with the instructions, may cause harmful interference to radio communications. However, there is no guarantee that interference will not occur in a particular installation.

If this equipment does cause harmful interference to radio or television reception, which can be determined by turning the equipment off and on, the user is encouraged to try to correct the interference by one or more of the following measures:

-- Reorient or relocate the receiving antenna.

-- Increase the separation between the equipment and receiver.

-- Connect the equipment into an outlet on a circuit different from that to which the receiver is connected.

-- Consult the dealer or an experienced radio/TV technician for help.

31. This equipment complies with FCC radiation exposure limits set forth for an uncontrolled environment. This equipment should be installed and operated with minimum distance 20cm between the radiator and your body. This transmitter must not be co-located or operating in conjunction with any other antenna or transmitter.

Legal Information

This symbol indicates that, at the end of your product's life, it must not be discarded as domestic waste. Instead, you should dispose of your used equipment at a designated collection point for the recycling of waste electrical and electronic equipment. Ref: EU Directive 2002/96/EC on Waste Electrical and Electronic Equipment (WEEE). Please contact your distributor / supplier for further information.

This product is suitable for indoor use only.

European Community (EC) directives conformity
This product complies with the protection requirements of EC directives 2014/30/EU and 2014/35/EU on the approximation and harmonization of the laws of the Member States relating to electromagnetic compatibility and safety of electrical equipment designed for use within certain voltage limits.
The manufacturer of this product is: Unit 18 9/f New Commerce Centre NO. 9 on Lai Street, Shatin, Hong Kong,China.
A declaration of conformity to the requirements of the Directives is available upon request from the Authorized Representative.
This product satisfies the Class B limits of EN 55032 and safety requirements of EN 62368.

Table of Contents

1. Before Using the Printer 1
1.1. Product series introduction 1
1.2. Supplied Accessories 2
1.3. Product View 3
1.4. Laser Toner Cartridge 5
1.5. Control Panel 6
1.5.1. Overview of control panel 6
1.5.2. Function of numeric keyboard 8
1.6. Function of status indicator 9
1.7. Function of power indicator 10
2. Paper and Print Media 11
2.1. Paper Specification 11
2.2. Special Paper 12
2.3. Non-printing Area and Non-scanning Area 13
2.4. Loading Paper 13
2.4.1. Loading into the Automatic Feeder Tray 13
2.4.2. Install manual feed tray 15
2.5. Paper and Manuscript Use Process 16
2.5.1. Scanning With Tablet 17
2.5.2. Scan with the automatic document feeder (ADF) 19
3. Driver installation and uninstallation 20
3.1. How to install Windows printer driver 20
3.1.1. One-click Installation 20
3.1.2. Manual installation 33
3.1.3. Method of driver unistallation 40
3.2. macOS system driver installation 40
3.2.1. Driver installation 41
3.3. Add printer to acOS system 43
3.3.1. Add up the printer via USB 43
3.3.2. Add up the printer via wireline connection 43
3.3.3. Add up the printer via wireless connection 43
3.3.4. Add AirPrint printer 44
4. Wired network setup (applicable to wired network models) 45
4.1. Set IP Address 45
4.1.1. Automatic Setting 45
4.1.2. Manual Setting 45
5. Wireless network setup (applicable to Wi-Fi models) 46
5.1. Basic structure mode 46
5.1.1. Wireless network setup tools 46
5.1.2. Wi-Fi Protected Setup (WPS) setup 50
5.1.3. How to disable the Wi-Fi network connected 51
5.2. Wi-Fi Direct mode 51
5.2.1. Preliminary preparations 51
5.2.2. Wi-Fi Direct connection 51
5.2.3. How to disable the Wi-Fi Direct 52

5.3. Wireless network setup FAQs 52
6. Web server 54
6.1. Visit the embedded Web server 54
6.2. Use Web server to manage printer 54
6.2.1. IP address setup 55
6.2.2. Wireless setup 56
6.2.3. Machine setup 56
6.2.4. Recover factory settings via Web server 59
7. Print 60
7.1. Print Function 60
7.2. Print Settings 61
7.3. Cancel printing 61
7.4. Printing Mode 61
7.4.1. Printing with the Automatic Feeder Tray 61
7.4.2. Printing with manual feed tray 62
7.5. Automatic Two-Sided Printing 62
7.5.1. Duplex printing unit setup 63
7.5.2. How to carry out auto duplex printing 64
7.6. Fine mode printing 66
7.7. Mute printing 67
7.8. Auto shut-off setting 68
7.9. Open Help Document 69
8. Copying 70
8.1. Copying function 70
8.2. Copying method 70
8.3. Copying cancel 70
8.4. Common copying setting 70
8.4.1.Image quality 71
8.4.2. Intensity 71
8.4.3. Resizing 71
8.4.4. Multipage 72
8.4.5. Clone 72
8.4.6. Poster 73
8.4.7. Collated copy 73
8.4.8. Manual duplex copying 73
8.4.9. Paper setting 75
8.5. ID card copying setting 75
8.5.1.Arrangement mode 76
8.5.2. Intensity 76
8.5.3. Paper dimension 76
8.6. Receipt setting 77
8.6.1. Intensity 77
8.6.2. Paper setting 77
9. Scan 78
9.1. Pull Scan 78
9.1.1. GG IMAGE Scan Application 78

9.1.2. TWAIN Scan Driver....79
9.1.3. WIA Scan Driver....81
9.2. macOS System Scan....85
9.2.1. ICA Scan....85
9.2.2. TWAIN Scan....88
9.3. Push Scan....89
9.3.1. Scan to PC....89
9.3.2. Scan to E-mail....89
9.3.3. Scan to FTP....90
9.3.4. Scan to U disk....91
9.4. Cancel Scan Job....91
10. Fax....92
10.1. Connect Devices....92
10.2. Fax Settings....92
10.3. Fax Functions....94
10.3.1. Send Fax....94
10.3.2. Receive Fax....96
10.3.3. Set the interference and the telephone line compatibility of VoIP system....96
10.3.4. Other Fax Functions....96
10.4. PC-Fax....98
10.4.1. Sending Fax with PC-Fax....98
11. Mobile Print (applicable to Wi-Fi models)....100
11.1. AirPrint mobile print....100
11.1.1. Operating systems supported by AirPrint mobile print....100
11.1.2. Preliminary preparations....100
11.1.3. How to use AirPrint mobile printing....100
12. General Settings....101
12.1. System Settings....101
12.1.1. Ink saving setting....101
12.1.2. Language Setting....102
12.1.3. Restore Factory Settings....102
12.1.4. Sleep Time Setting....103
12.1.5. Mute printing....103
12.1.6. Print a Page for Clean & Fix....104
12.1.7. Auto shut-off setting....104
12.2. Network Settings....105
12.3. Network Information....105
12.4. Print information report....106
12.5. Residual amount of toner....106
12.6. Configure the e-mail address book....107
12.7. Configure the FTP address book....107
12.8. Online upgrade....107
13. Routine Maintenance....108
13.1. Cleaning the Printer....108
13.2. Toner cartridge and drum component maintenance....111
13.2.1. About toner cartridge and drum component component....111

13.2.2. Replace toner cartridge and drum component....111
14. Troubleshooting 116
14.1. Cleaning Jammed Paper 116
14.1.1. Middle jam 116
14.1.2. Paper Jam in the Fuser Unit....119
14.1.3. Duplex Unit Jam....121
14.1.4. A paper jam occurs on the automatic document feeder (ADF) 122
14.2. Software Failure 124
14.3. Error Message....125
14.4. Common Troubleshooting 126
14.4.1. Common Trouble 126
14.4.2. Image Defects....128
14.5. Fax faults 131
15. Menu Structure 133
16. Product Specifications....134
16.1. Overview of the Specifications....134
16.2. Print Specifications....135
16.3. Copy Specifications....135
16.4. Scan Specifications 135

1. Before Using the Printer

1.1. Product series introduction

Product series parameters			M4100DN series	M4100DW series
Interface type	USB		●	●
	NET		●	●
	Wi-Fi			●
Print Language	GDI			
	PDL		●	●
Control Panel	LCD		●	●
Print Speed	A4	30ppm		
		33ppm	●	●
	Letter	32ppm		
		35ppm	●	●
Automatic Two-Sided Printing			●	●
Mute printing			●	●
Copy			●	●
Scan			●	●
Fax				
Scan to U-disk			●	●
ADF			●	●

(●: Support; Blank: Unsupport)

Note:• This product series is subject to additions or changes without prior notice.

• For machine with the fax feature, it needs to execute language, system and fax settings following instructions on the panel in first startup or after restoring to factory settings.

• For this user manual, the "ADF" is short for automatic document feeder.

1.2. Supplied Accessories

Name	Parts
Toner cartridge	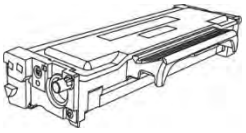
Drum component	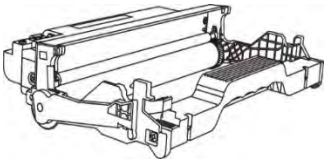
USB Interface Cable	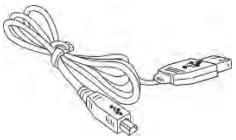
Power Cord	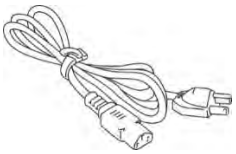
CD	
Quick Setup Guide	
GG IMAGE Warranty	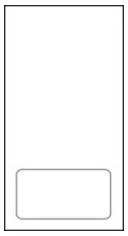

Note:• The GG IMAGE Warranty may not be attached in some regions.

1.3. Product View

Side view

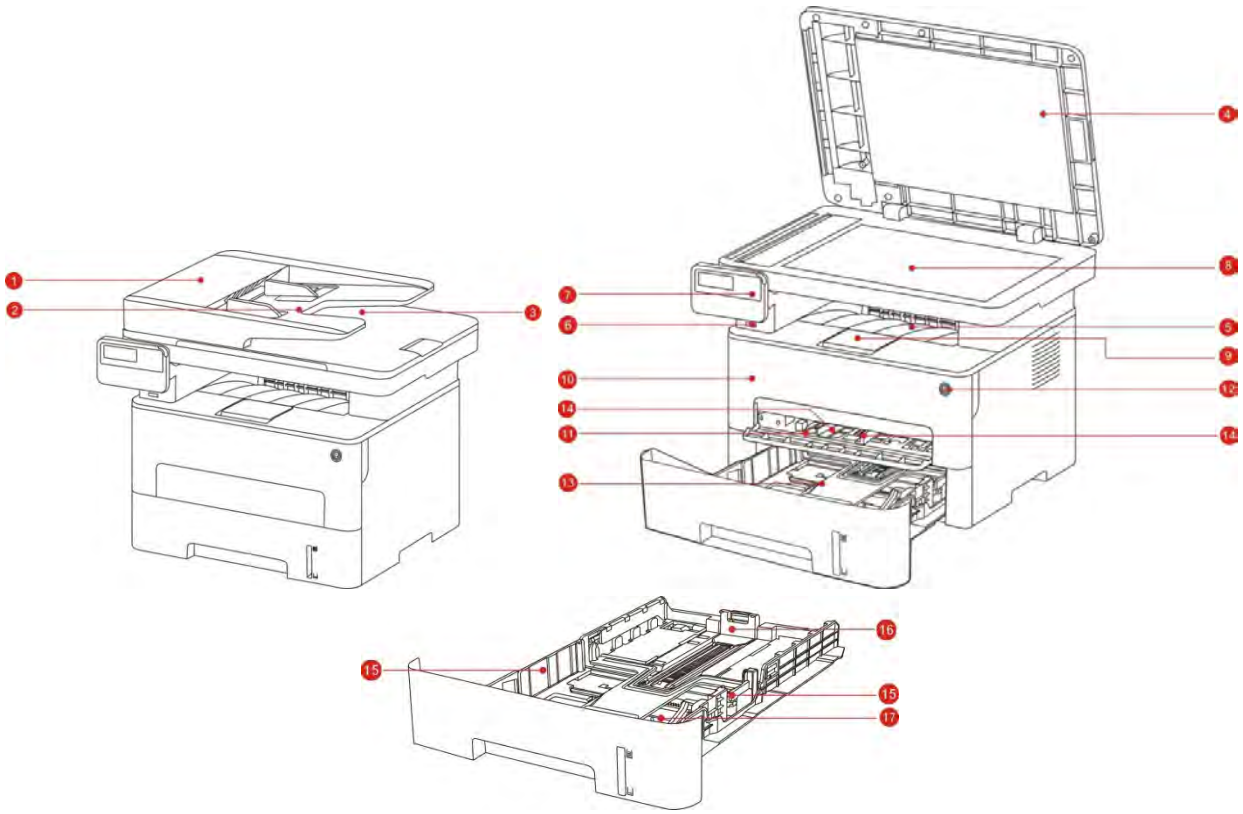

1	Cover of automatic document feeder	This is used to remove the paper jammed in scanning for the ADF.
2	Feed tray of automatic document feeder	This is used to place originals scanned from the ADF.
3	Exit tray of automatic document feeder	Prevent originals scanned from falling off.
4	Cover of scanner	Open the cover of scanner to place the scanned originals on its glass plate.
5	Output Bin	For storing the printed paper.
6	Front USB interface	This is used to scan to an U-disk without a computer.
7	Control Panel	Indicate printer status to conduct set operation.
8	Glass Platen	This is used to place originals scanned from platen.
9	Output Tray	To prevent the printed paper from falling.
10	Front Cover	To open the front cover to take out the laser toner cartridge.
11	Manual feed tray	For placing mediums that are printed in manual feed tray.
12	Power switch	Turn the power on or off and press this button under Ready state

		to enter energy-saving mode. Press and hold this button for more than 2s to turn the printer power off.
13	Automatic Feeder Tray	For placing mediums that are printed in auto feed tray.
14	Paper deflector of manual feed tray	Slide paper deflector to adapt to paper width
15	Paper width deflector of auto feed tray	Slide paper width deflector to adapt to paper width.
16	Paper length deflector of auto feed tray	Slide paper length deflector to adapt to paper length.
17	Clip of extended tray of auto feed tray	For adjustment of length extension of the tray .

Rear View

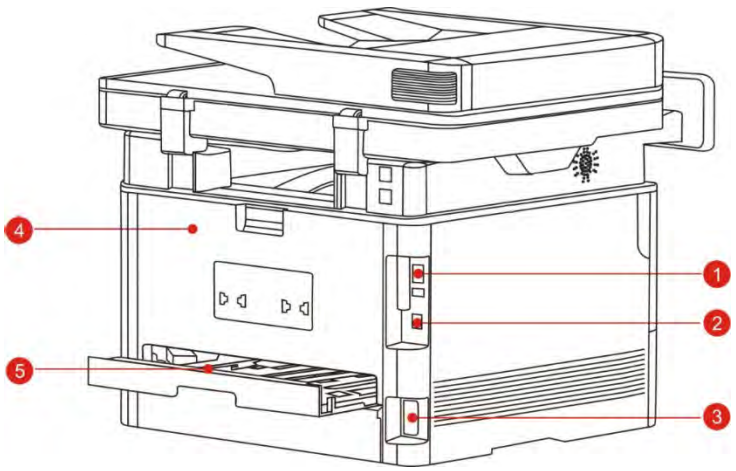

1	USB Interface	For connecting product to computer with USB cable.
2	Network Interface	For connecting product to network with network cable.
3	Power Interface	For connecting product to power with power cord.
4	Rear Cover	For paper release when it gets jammed.
5	Duplex Printing Unit	For paper feed at duplex printing and paper release when paper gets jammed at duplex printing.

Note: • Printer appearance may differ because of various models and functions, so the schematic diagram is only for your reference.

1.4. Laser Toner Cartridge

Laser toner cartridge is composed of drum component and toner cartridge.

Service life of drum component

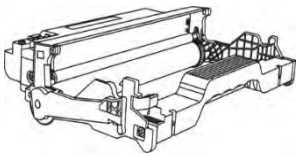

Type	Average Print Volume
High volume drum component	About 25000 Pages(Based on A4/LTR size (3pages/job))

Service life of toner cartridge

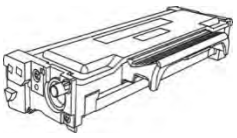

Type	Average Print Volume
Standard-volume toner cartridge	About 3000 Pages(Based on ISO 19752 standard)
High-volume toner cartridge	About 6000 Pages(Based on ISO 19752 standard)
Super large volume catridge	About 11000 Pages(Based on ISO 19752 standard)

Note:• The model is subject to increase without notice.

• Consumables capacity may vary with different using types.

• The Company does not recommend using consumables other than the original consumables provided, as any damages caused by non-original consumables are not covered by the scope of warranty.

• Toner cartridge appearance may differ because of multiple volume and models, so the schematic diagram is only for your reference.

• High volume drum component and super large volume catridge are only applicable to some models, please refer to the specifications of the model that you actually purchase.

1.5. Control Panel

1.5.1. Overview of control panel

The layout of the printer control panel is shown below:

Control panel without the fax feature

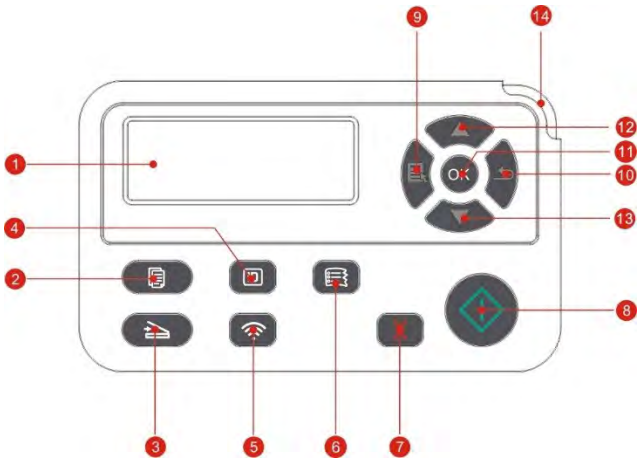

No.	Name	Functions
1	LCD Display	Display operation interface and product information.
2	Copy Button	Press this button to enter into copy mode.
3	Scan Button	Press this button to enter into scan mode.
4	ID Card Copy Button	Press this button to enter into ID Card Copy mode.
5	Wi-Fi button	Short press Wi-Fi button to turn on direct Wi-Fi connection of the printer and automatically print out "Mobile Device Wi-Fi Connection Wizard" page (for models with Wi-Fi function only). Long press Wi-Fi button for over 2s to start WPS when Wi-Fi is not connected or to disconnect Wi-Fi when it has already been connected (for models with Wi-Fi function only). Open save toner function(applicable to non-Wi-Fi model only).
6	Bill Copy Button	Press this button to enter into Bill Copy mode.
7	Cancel	Execute cancel operation Idle state interface under copy mode, to reset the "Number of Copies" to 01.
8	Start Button	This is used to start relevant operations after finishing operation settings. In case of a feed failure, please press this key for pick-up and printing again.
9	Menu	Open the main menu of control panel

10	Back	Return to the previous menu.
11	OK	Confirm the selection on screen.
12	UP	Scroll through the menus and options . Increase 1 copy on the ready interface of Copy mode.
13	Down	Scroll through the menus and options . Decrease 1 copy on the ready interface of Copy mode.
14	Status Light	Indicate the status of printer. (Please see Chapter 1.6).

Control panel with the fax feature

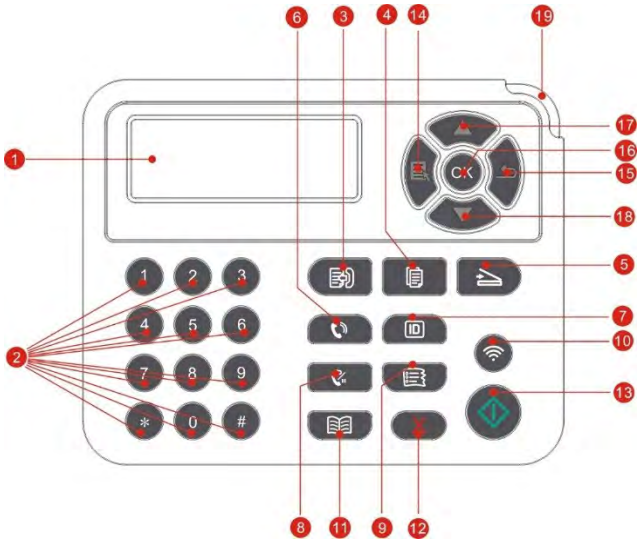

No.	Name	Functions
1	LCD Display	Display operation interface and product information.
2	Numeric keyboard	Dial or input letters, numbers or characters. (Please see Chapter 1.5.2).
3	Fax	Press this button to enter into the Fax mode.
4	Copy Button	Press this button to enter into copy mode.
5	Scan Button	Press this button to enter into scan mode.
6	Speaker	This is used to manually receive and send faxes under Fax mode, or for phone calls.
7	ID Card Copy Button	Press this button to enter into ID Card Copy mode.
8	Redial/Pause	This is used to redial the last number dialed before under Standby mode or to insert a pause symbol in the fax number under Edit mode.
9	Bill Copy Button	Press this button to enter into Bill Copy mode.

10	Wi-Fi button	Short press Wi-Fi button to turn on direct Wi-Fi connection of the printer and automatically print out "Mobile Device Wi-Fi Connection Wizard" page (for models with Wi-Fi function only). Long press Wi-Fi button for over 2s to start WPS when Wi-Fi is not connected or to disconnect Wi-Fi when it has already been connected (for models with Wi-Fi function only). Open save toner function(applicable to non-Wi-Fi model only).
11	Contacts	This is used to enter quickly the Phone Book option under Fax mode.
12	Cancel	Execute cancel operation Idle state interface under copy mode, to reset the "Number of Copies" to 01.
13	Start Button	This is used to start relevant operations after finishing operation settings. In case of a feed failure, please press this key for pick-up and printing again.
14	Menu	Open the main menu of control panel
15	Back	Return to the previous menu.
16	OK	Confirm the selection on screen.
17	UP	Scroll through the menus and options . Increase 1 copy on the ready interface of Copy mode.
18	Down	Scroll through the menus and options . Decrease 1 copy on the ready interface of Copy mode.
19	Status Light	Indicate the status of printer. (Please see Chapter 1.6).

1.5.2. Function of numeric keyboard

Sometimes it needs to input names and numbers in executing some tasks. Letters, numbers and characters on the keyboard are distributed as below:

Keys	Numbers, letters and characters distributed
0	0
1	@ / ; . 1
2	a b c A B C 2
3	d e f D E F 3
4	g h I G H I 4
5	j k l J K L 5
6	m n o M N O 6
7	p q r s P Q R S 7
8	t u v T U V 8
9	w x y z W X Y Z 9
*	（Space） & + , - * % ~ ! $ ( ) [ ]
#	# = ‘ | _ ? " : { } < >

Note: • It may not allow to input all special characters above mentioned in different input environments.

a. Input of fax/phone number. It supports only inputting with 0-9 number keys and the "*" and "#" keys. In addition, it is available to input spaces with the Down key and the symbol "-" with the Redial/Pause key.

b. Mixed input of letters, numbers and symbols. It is only allowed to input with 0-9 number keys and the "*" and "#" keys. Specific corresponding characters are different according to the difference of input environments. (Under this condition, pressing the Down key could make the cursor move backward; the symbol "-" could not be input with the Redial/Pause key.)

• When inputting a number or name, short pressing Cancel could clear the last number or character; while to clear all numbers or characters, please long press it. You may also use the Up key to clear the last number or character.

1.6. Function of status indicator

The meanings of status displayed by the status indicator are as below:

No.	Status displayed by the status indicator	Status	Status Description
1		Die out	Shutdown or sleep state
2		Green indicator normally on	Printer is ready
3		Green indicator blinks	Operative modes of Print, Copy, Scan, Fax and others
4		Orange indicator blinks	Low toner warning
5		Red indicator normally on	• Toner cartridge error (uninstalled ink cartridge, unmatching ink cartridge, invalid toner cartridge) • Drum unit error (the drum units are not installed, not compatible or come to the end of their service lives.) • Paper error (a paper out, paper jam or feed failure occurs) • Scan error (a scanning failure occurs, and the ADF has an open cover or a paper jam.) • Fax error or printer error such as the front cover of the printer is open.

1.7. Function of power indicator

No.	Status displayed by power indicator	Status	Status Description
1		Die out	Shutdown status
2		Always on	Booting and ready states
3		Blink	Sleep mode

2. Paper and Print Media

2.1. Paper Specification

Automatic Feeder Tray	Media Type	Plain paper(70～105g/m²),thin paper(60～70g/m²)
	Media size	A4, Letter, A5, Legal, Statement, JIS B5, Folio, Oficio, Executive, ISO B5, A6, B6, 16K, Big 16K, 32K, Big 32K,Custom
	Media weight	60～105g/m²
	Maximum capacity of the tray	250 pages （80 g/m²）
Manual feed tray	Media Type	Plain paper(70～105g/m²),thin paper(60～70g/m²),thick paper(105～200g/m²),transparent film,carton paper,label paper, envelope
	Media size	A4, Letter, Legal, Folio, Oficio, Statement, Executive, JIS B5, ISO B5, A5, A6, B6, Monarch Env, DL Env, C5 Env, NO.10 Env, C6 Env, Japanese Postcard, ZL, 16K, Big 16K, 32K, Big 32K, Yougata4, Postcard, Younaga3, Nagagata3, Yougata2,Custom
	Media weight	60～200 g/m²
	Maximum capacity of the tray	1 pages

Note:
- 80 g/m² standard paper is recommended for this printer.
- It is not recommended to use special paper extensively, which may affect the service life of the printer.
- The print media that does not meet the guidelines listed in this User Guide may result in poor print quality, increased paper jam and excessive wear of the printer.
- Properties such as weight, composition, texture and humidity are important factors affecting the printer performance and output quality.

Please note the following matters when selecting the print media:

1. Desired print effect: The print media selected should meet the requirement of the print tasks.
2. Surface smoothness: The smoothness of the print media may affect the sharpness of the print outcome.
3. Some print media may meet all the use guidelines contained herein,but they still can not bring satisfactory effect. This may be due to incorrect operation, inappropriate temperature and humidity, or other factors beyond the control of GG IMAGE Before purchasing large quantities of print media, make sure that the print media meets the specifications specified in this User Guide.

2.2. Special Paper

This printer supports using the special paper for printing. Special paper includes: label paper,envelope, transparent film, thick paper,carton paper, thin paper.

Note:• When using special paper or print media, be sure to select matched print type and size in the print settings so as to get the best print effect.

Please observe the following standards:

Types of Print Media	Correct Practices	Incorrect Practices
Label Paper	Use labels with no exposed lining paper only. Labels shall be put flat when using. Use labels of full sheet only. There is no guarantee that all the labels in the market can meet corresponding requirements.	Use wrinkled, blistered or damaged label papers.
Envelope	Envelopes should be loaded evenly.	Use wrinkled, nicked, stuck or damaged envelopes. Use envelopes with clips, snaps, windows, or coated linings. Use envelopes with self-adhesive stickers or other synthetic materials.
Transparent Film	Only use transparent films approved for use in laser printers.	Use transparent print media that is not suitable for laser printers.
Thick Paper, carton paper	Only use heavy paper that is approved for use in laser printers and meets the weight specifications of this printer.	Use the paper whose weight is more than the specification of the media recommended for this printer, unless the paper is approved for use in this printer.

2.3. Non-printing Area and Non-scanning Area

The shaded part indicates the non-printing area and non-scanning area.

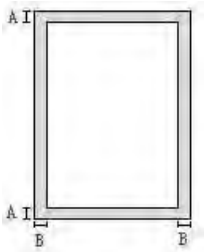

Usage	Paper Size	Top and bottom margins (A)	Left and right margins (B)
Printing	A4	5mm(0.197inch)	5mm(0.197inch)
	Letter	5mm(0.197inch)	5mm(0.197inch)
Scan	A4	5mm(0.197inch)	5mm(0.197inch)
	Letter	5mm(0.197inch)	5mm(0.197inch)

2.4. Loading Paper

Note: • Printer appearance may differ because of various models and functions, so the schematic diagram is only for your reference.

2.4.1. Loading into the Automatic Feeder Tray

1. Slide out the automatic feeder tray from the printer.

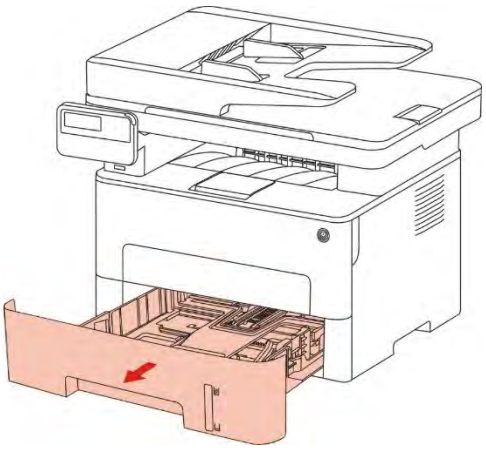

2. Slide the clip of extended tray of auto feed tray, paper length deflector and paper width deflector to the slot suitable for paper size, in order to match paper length and width.

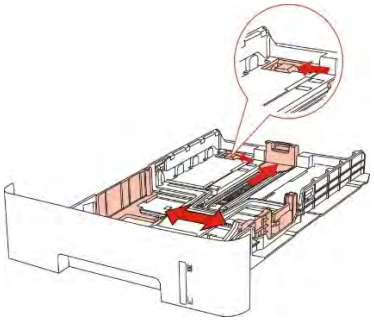

Note: • Do not overly squeeze the "paper length guide" and "paper width guide", otherwise it could easily lead to deformation of paper.

3. Before loading paper, please unfold the stacked paper to avoid a paper jam or feed error, and then load the paper into the tray print-side down.The automatic feeder tray can be loaded up to 250 pages, 80g/m² paper.

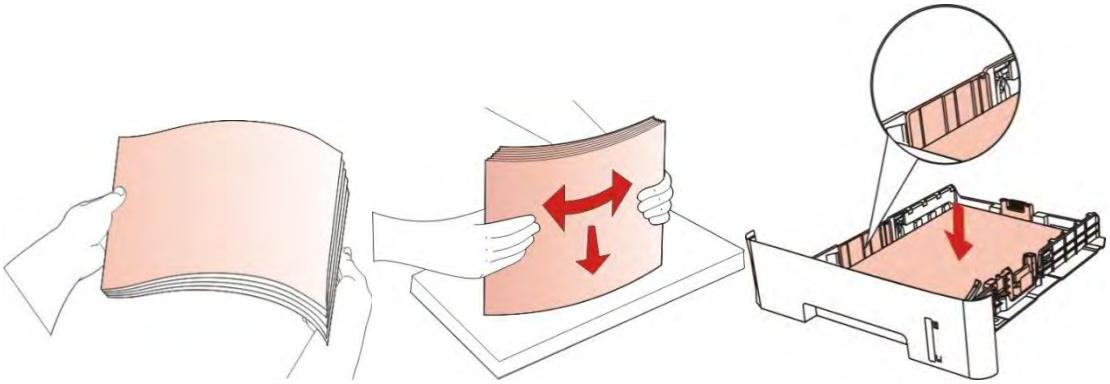

4. Raise the output tray to avoid the printed paper from slipping and falling, or immediately remove the printed document after the printing is complete.

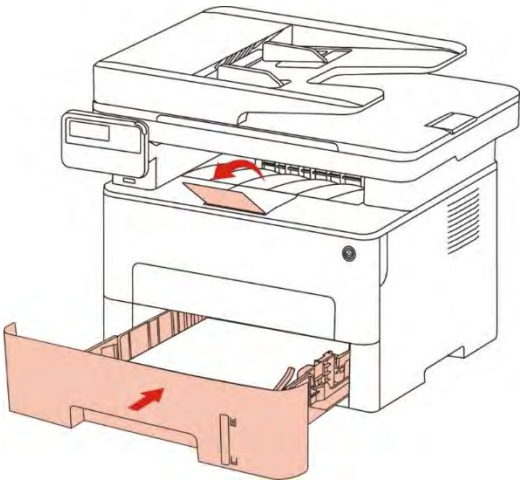

Note:• It is recommended that you raise the output tray to prevent the paper from slipping and falling after printing. If you choose not to raise the output tray, we recommend that you immediately remove the printed paper from the printer.

• If more than 250 pages (80 g/m²) are put inside the auto feed tray at one time, paper jam or paper feed failure will be led to.

• If carrying out single-sided printing, please make sure that the side to be printed (the blank side) is face down.

2.4.2. Install manual feed tray

1. Raise the output tray to avoid the printed paper from slipping and falling, or immediately remove the printed document after the printing is complete.

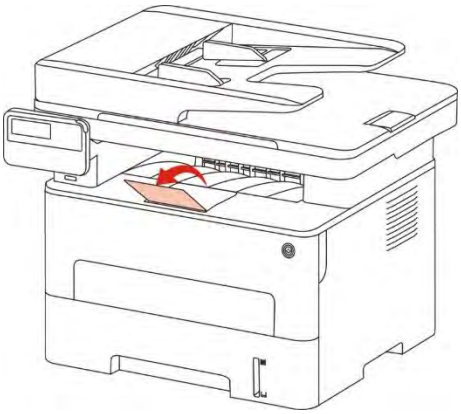

2. Open manual feed tray.

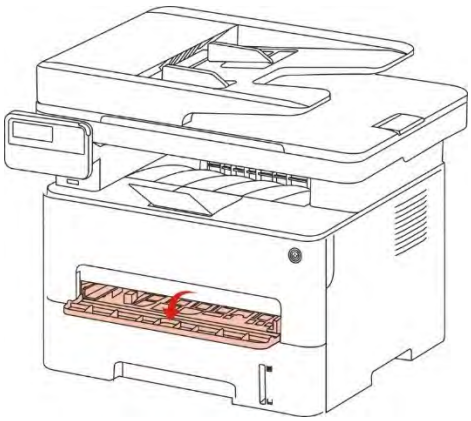

3. Slide the paper deflector of manual feed tray to match the two sides of paper. Do not use excessive force; otherwise, paper will be made jammed or skewed.

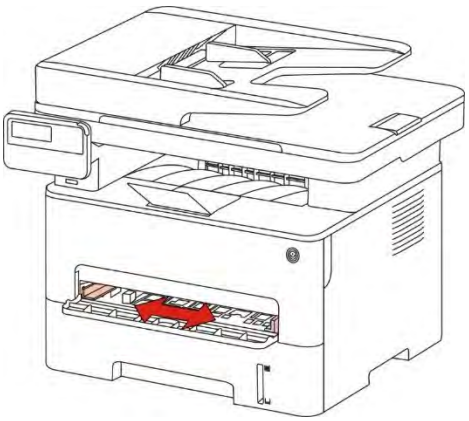

4. Put a flat printing medium into the manual feed tray with both hands.

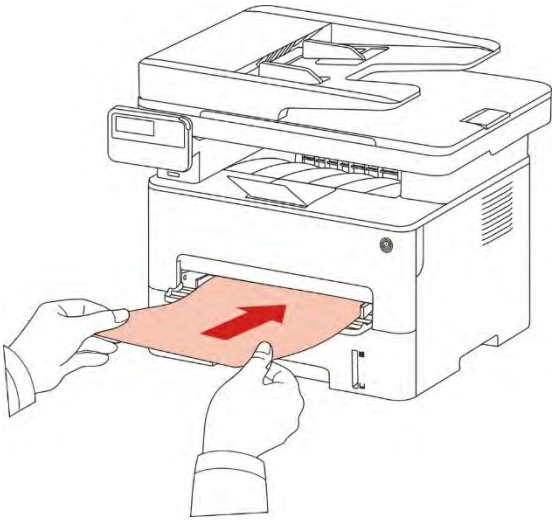

Note:• The printer will enter manual feed mode automatically when you put papers inside the manual feed tray.

• Please put one printing medium inside the manual feed tray each time and put in another piece after finishing printing.

• Put the printing medium inside the manual feed tray with the printing side up; the top of paper should be put inside first.

5. When the printed page is output from the printer, put the second piece inside according to the above steps to continue printing. Slow action will lead to the prompt of paper out or paper failure of manual feed tray. After paper is put inside, printing will be resumed automatically; too quick action may make paper caught up in the printer, which will easily result in paper jam.

Note:• After printing, please take out printed papers output from printer immediately. Stacked papers or envelops will lead to paper jam or wrapped paper.

2.5. Paper and Manuscript Use Process

Manuscript requirements:

Source	Type	Size
Automatic document feeder (ADF)	Plain paper	A4, A5, B5, A6,Letter,Folio,Legal
Platen	Plain paper, thin paper, thick paper, transparent film, carton paper, label paper, envelope	A4, A5, B5, Letter, Full Scanning Platen, Custom

2.5.1. Scanning With Tablet

Note: • Printer appearance may differ because of various models and functions, so the schematic diagram is only for your reference.

Steps of Use:

1. Lift up the scanner cover.

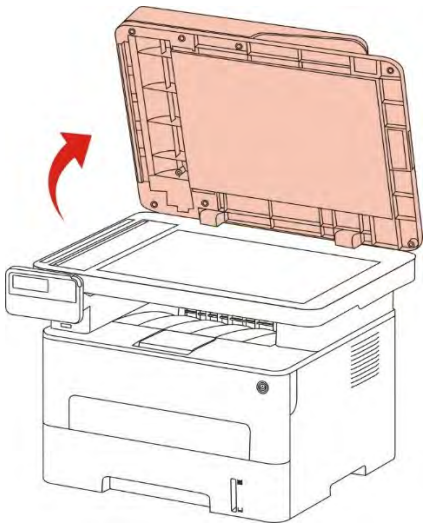

2. Load the manuscript face down.

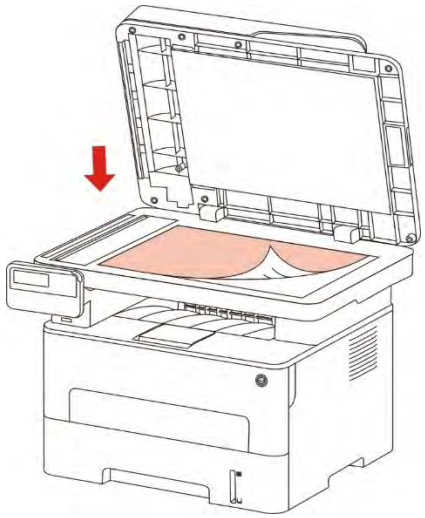

3. Align the manuscript to match the appropriate paper size.

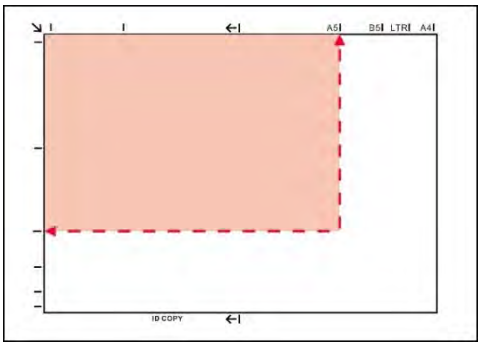

Note:• If the manuscript does not match with any size marker, please align the upper-left corner of the manuscript with the arrow.

• Make sure there is no document in the ADF. If a document is detected in the ADF, it will be more preferential than that on glass platen.

4) Close the scanner cover gently.

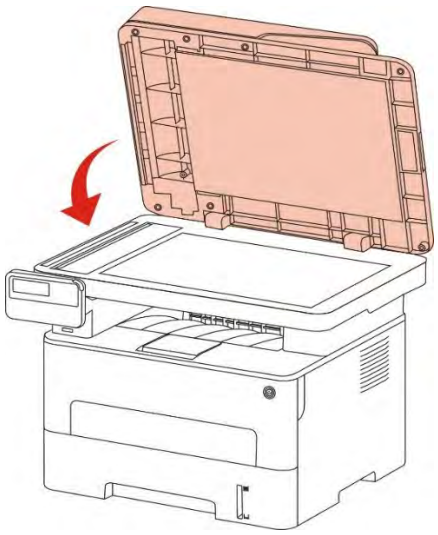

Note: • Please put the paper or document on the scanner glass after the glue, ink or correction fluid are completely dried.

• Rough textured, uneven, oil stained and extremely smooth paper will make printing effect poor.

• Please make sure that there is no dust, fluff, etc. on the paper.

• Paper shall be put on a flat surface and stored under a cool and dry environment.

• To avoid influencing the definition, please don't open the scanner cover during scanning with the platen.

2.5.2. Scan with the automatic document feeder (ADF)

1. Put the original into the ADF with its front upward and top fed first.

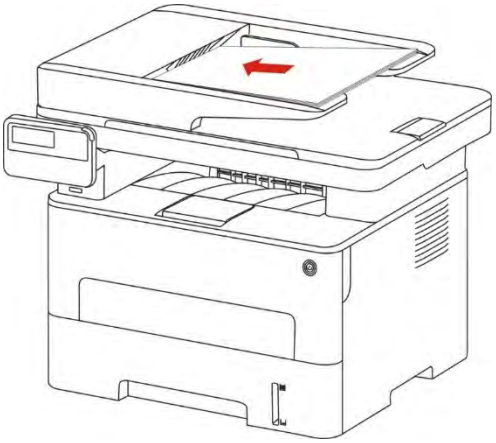

2. Adjust the document guide till it gets close to the paper stack.

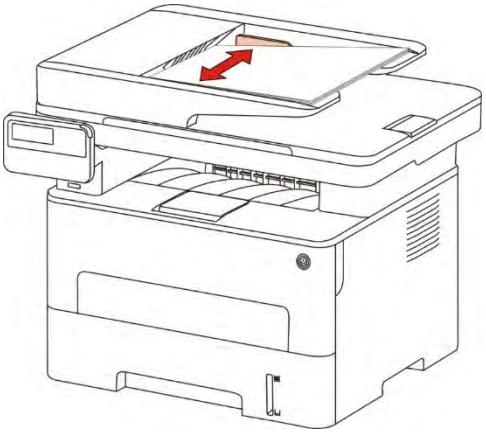

Note:• The ADF supports feeding 50 pieces of paper at most that should be fed one by one.

3. Driver installation and uninstallation

3.1. How to install Windows printer driver

Windows driver installation software provides two installing methods: one-click installation and manual installation.We recommend one-click installation, which can help to install driver automatically in a faster and more convenient way.If you have any difficulty in using one-click installation, please try manual installation.

Note:• Driver installation interface may differ because of different models and functions, so the schematic diagram is only for your reference.

3.1.1. One-click Installation

One-click installation provides three methods of installation: connect the printer via USB cable, connect the printer via wired nectwork, and connect the printer via wireless network. You can choose one of them according to your habit.

3.1.1.1. Method I: Connect the printer via USB cable

1. Connect the printer to computer via USB cable, power the printer and computer on.

2. Place the attached installation CD in the computer CD-ROM:

• Windows XP system: automatically run the installation procedure.

• Windows 7/Vista/Server 2008 system: Pop up "Autoplay" interface, click “Autorun.exe” to run the installation procedure.

• Windows 8 system: When the " DVD RW driver" window pops up from the right top corner of computer desktop, click anywhere in the pop-up window, then click "Autorun.exe" to run the installation procedure.

• Windows 10 system: When the "DVD RW driver" window pops up from the right top corner of computer desktop, click anywhere in the window, then click "Autorun.exe" to run the installation procedure.

Note:• Some computers may be unable to auto play the CD beacase of system configuration. Please double click "Computer" icon, find "DVD RW driver", then double click "DVD RW driver" to run the installation procedure.

3. Click on the "I agree" button on the right buttom corner after reading the license agreement and enter into driver installation interface.

4. Click on the "One-click installation" button in Method I and enter into the installation process. The process may need some time, and the duration is related to your computer configuration, please wait patiently.

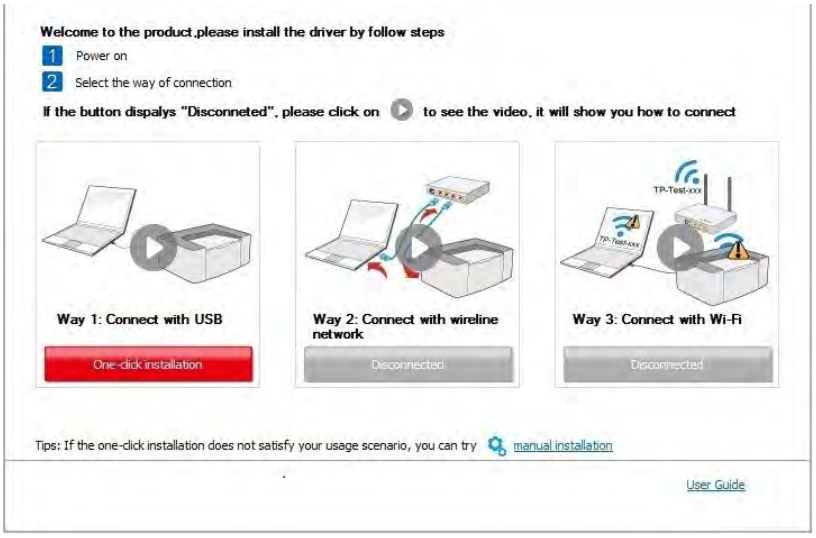

5. After the installation, click "Print &Test Page" button. If your printer prints the test page successfully, it means that you have installed the driver correctly.

3.1.1.2. Method II: Connect the printer via wired network

1. Turn the power of printer and computer on.

2. Connect the computer to wired network.

3. Connect network cable to the network interface of printer, to make sure the printer is connected to computer network (please refer to Chapter 4 for network setup).

4. Place the attached installation CD in the computer CD-ROM:

• Windows XP system: automatically run the installation procedure.

• Windows 7/Vista/Server 2008 system: Pop up "Autoplay" interface, click “Autorun.exe” to run the installation procedure.

• Windows 8 system: When the " DVD RW driver" window pops up from the right top corner of computer desktop, click anywhere in the pop-up window, then click "Autorun.exe" to run the installation procedure.

• Windows 10 system: When the "DVD RW driver" window pops up from the right top corner of computer desktop, click anywhere in the window, then click "Autorun.exe" to run the installation procedure.

Note:• Some computers may be unable to auto play the CD beacase of system configuration. Please double click "Computer" icon, find "DVD RW driver", then double click "DVD RW driver" to run the installation procedure.

5. Click on the "I agree" button on the right buttom corner after reading the license agreement and enter into driver installation interface.

6. Please click on the "One-click installation" button in Method II and install driver software.

Note:• You can put your mouse cursor in the "One-click installation" button to check the popup information in order to confirm if the current printer is the one you need to install through IP address before you click the button.

• You can check the printer IP address through "Network configuration page" (Please see Chapter 12.4 for how to print)

• Click on the "One-click installation" button to enter installation process if your software has searched only one printer. The process may need some time, and the duration is related to your computer configuration. Please wait patiently.

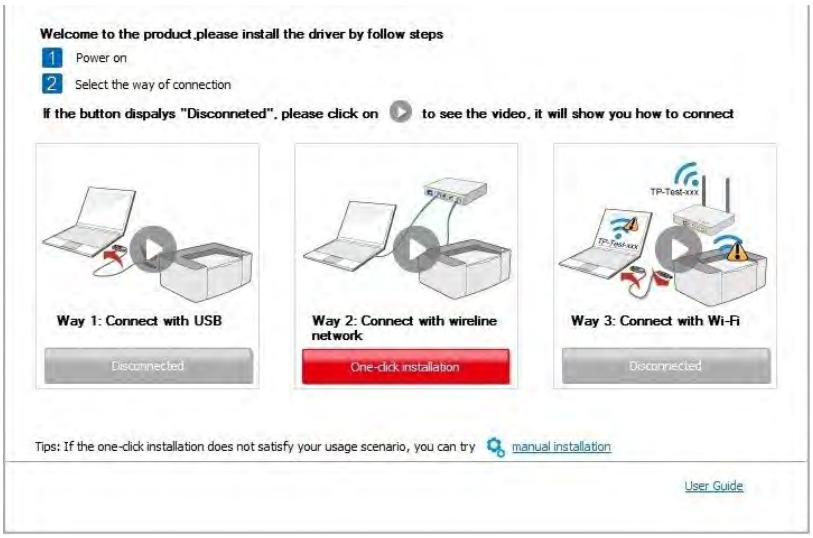

• If your software has searched several printers, click on the"One-click intallation" button, and the printer list interface will pop up. Please select the printer that you need according to your printer wired network IP address or host ID.

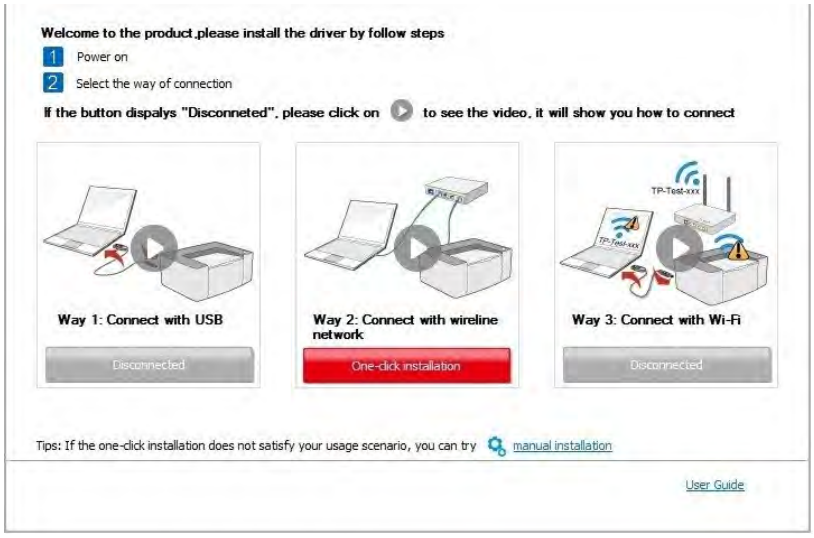

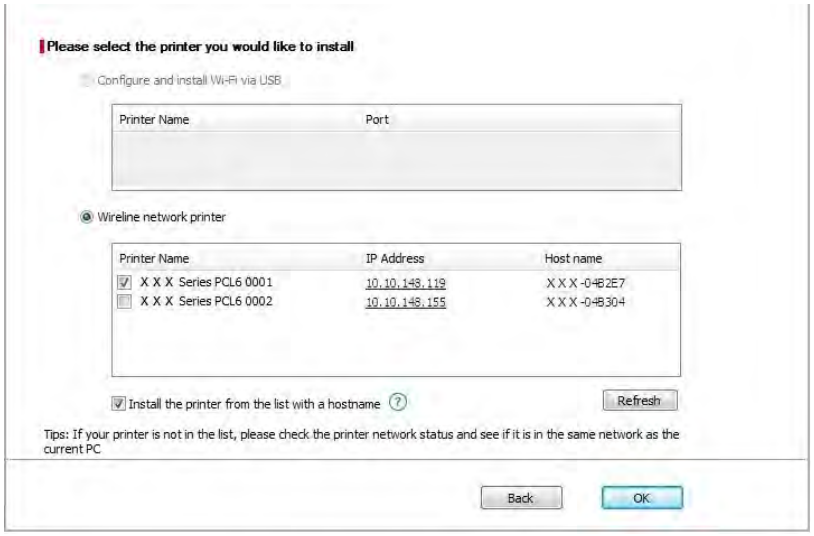

7. After the installation, click "Print &Test Page" button. If your printer prints the test page successfully, it means that you have installed the driver correctly.

3.1.1.3. Method III: Connect the printer via wireless network

Please check if the printer is connected with wireless network when installing the printer driver software. If disconnected, please install it with reference to Chapter 3.1.1.3.1. If connected, please install it with reference to Chapter 3.1.1.3.2.

Note:• You can print "Network configuration page" to confirm printer network connection status to see if printer is connected with network (Please see Chapter 12.4 for how to print).

3.1.1.3.1. The printer is not connected with wireless network

3.1.1.3.1.1. Configure wireless network via USB cable and install driver

Since some computers are not provided with wireless network function, this section is divided into "Connect computer to router via Wi-Fi" and "Connect computer to router via wired connection" to introduce installation process.

I. Connect computer to router via Wi-Fi

1. Computer is already connected to router via Wi-Fi.
2. Connect the printer to computer via USB cable, then power the printer on.
3. Place the attached installation CD in the computer CD-ROM:

• Windows XP system: automatically run the installation procedure.

• Windows 7/Vista/Server 2008 system: Pop up "Autoplay" interface, click “Autorun.exe” to run the installation procedure.

• Windows 8 system: When the " DVD RW driver" window pops up from the right top corner of computer desktop, click anywhere in the pop-up window, then click "Autorun.exe" to run the installation procedure.

• Windows 10 system: When the "DVD RW driver" window pops up from the right top corner of computer desktop, click anywhere in the window, then click "Autorun.exe" to run the installation procedure.

Note:• Some computers may be unable to auto play the CD beacase of system configuration. Please double click "Computer" icon, find "DVD RW driver", then double click "DVD RW driver" to run the installation procedure.

4. Click on the "I agree" button on the right buttom corner after reading the license agreement and enter into driver installation interface.
5. Click the "One-click installation" button in Method III to install driver software.

Note:• You can put your mouse cursor in the "One-click installation" button to check the popup information in order to confirm if the current printer is the one you need to install through IP address before you click the button.

• You can check the printer IP address through "Network configuration page" (Please see Chapter 12.4 for how to print)

• Click "One-click installation" button if your software has searched only one printer, and enter into installation process to complete automatic network configuration and driver installation.

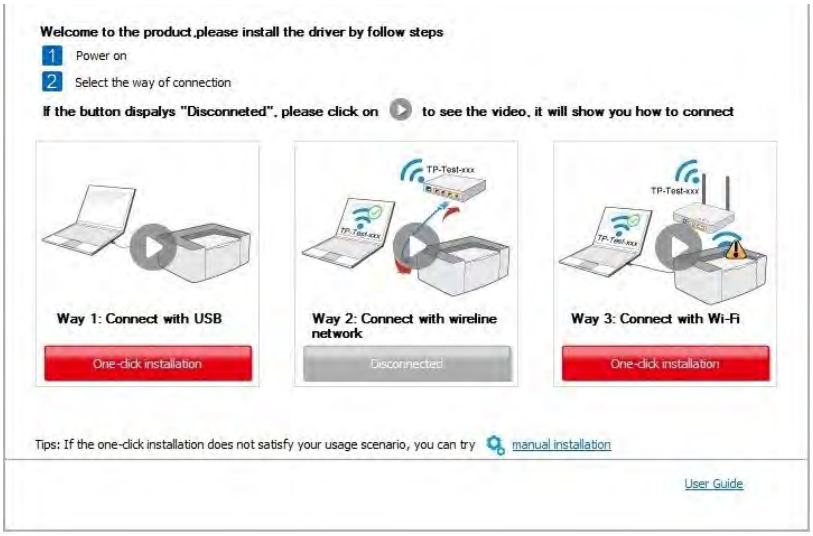

• If your software has searched several printers, click "One-click intallation" button, and the printer list interface will pop up. Please select "Configure printer with Wi-Fi via USB and install" and select USB printer, click "Confirm" button and enter into installation process to complete automatic network configuration and driver installation.

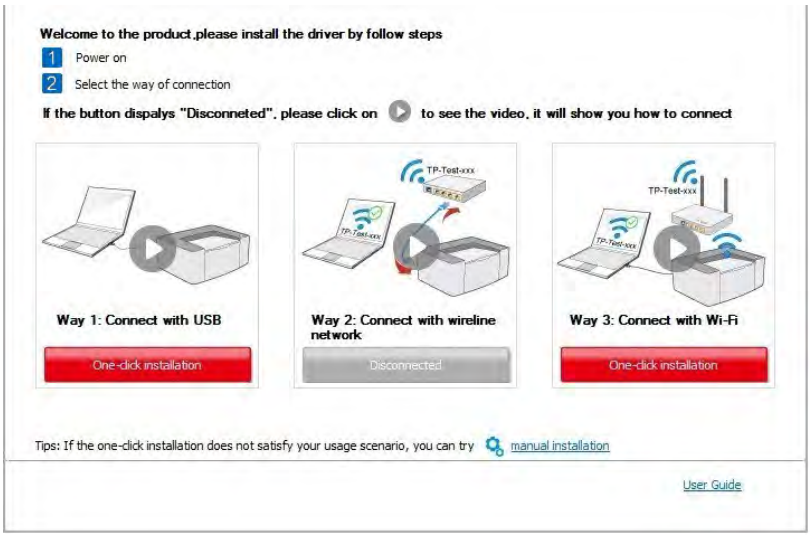

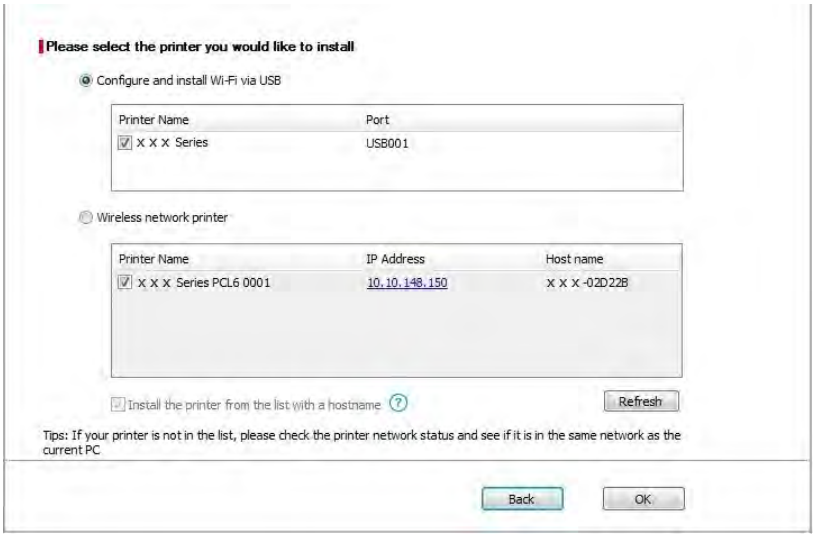

Note:• When the printer IP address changes under printer driver installed with host ID , you can also directly print without re-installing the driver. If you need to install the printer driver with the host ID, please check the option "Install the printer in the list with host ID".

6. After the installation, click "Print &Test Page" button. If your printer prints the test page successfully, it means that you have installed the driver correctly.

II. Connect computer to router via network cable

1. Connect computer to router via network cable.

2. Connect the printer to computer via USB cable, then power the printer on.

3. Place the attached installation CD in the computer CD-ROM:

• Windows XP system: automatically run the installation procedure.

• Windows 7/Vista/Server 2008 system: Pop up "Autoplay" interface, click “Autorun.exe” to run the installation procedure.

• Windows 8 system: When the " DVD RW driver" window pops up from the right top corner of computer desktop, click anywhere in the pop-up window, then click "Autorun.exe" to run the installation procedure.

• Windows 10 system: When the "DVD RW driver" window pops up from the right top corner of computer desktop, click anywhere in the window, then click "Autorun.exe" to run the installation procedure.

Note:• Some computers may be unable to auto play the CD beacase of system configuration. Please double click "Computer" icon, find "DVD RW driver", then double click "DVD RW driver" to run the installation procedure.

4. Click on the "I agree" button on the right buttom corner after reading the license agreement and enter into driver installation interface.

5. Please click on the "One-click installation" button in Method III and install driver software.

Note:• You can put your mouse cursor in the "One-click installation" button to check the popup information in order to confirm if the current printer is the one you need to install through IP address before you click the button.

• You can check the printer IP address through "Network configuration page" (Please see Chapter 12.4for how to print).

• Click on the "One-click installation" button if your software has only searched only one printe, and the wireless network configuration interface will pop up, input the SSID and password that you need, then click "Confirm" button, and enter into installation process. The process may need some time, and the duration is related to your computer configuration, please wait patiently.

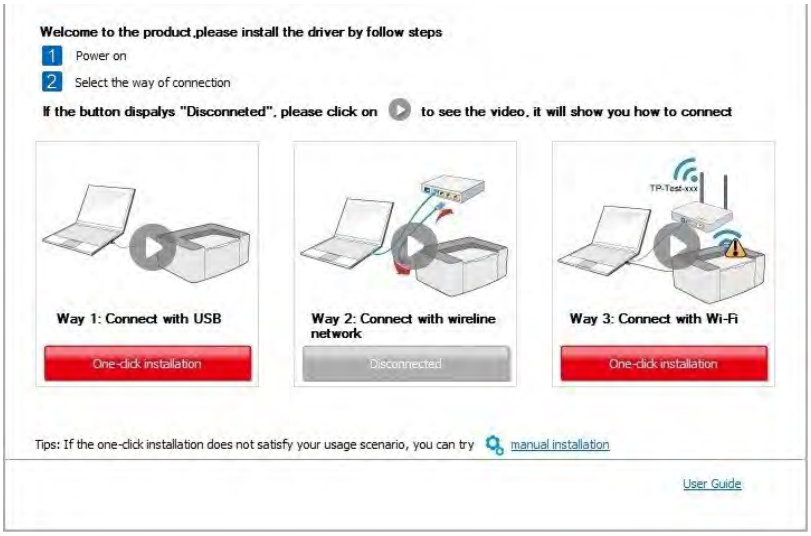

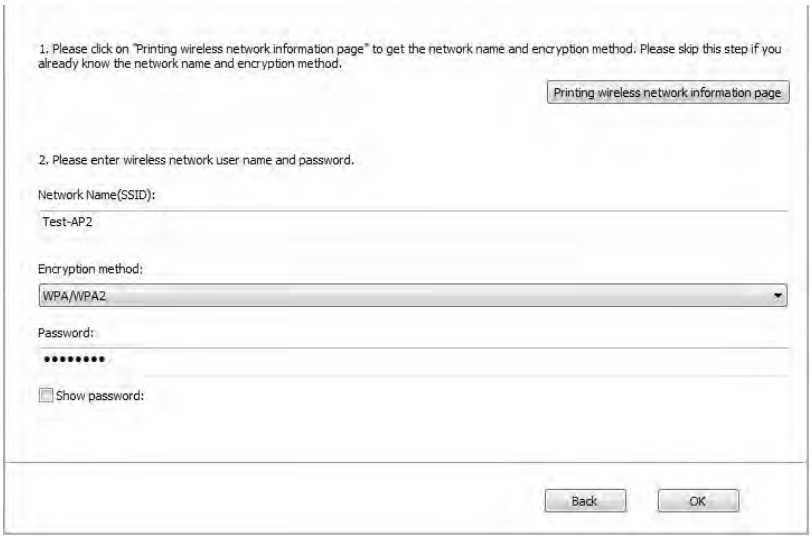

• If your software has searched more than one printers, the printer list interface will pop up.You need to configure the current printer which is connected via USB cable to wireless network and install driver. Please select "Configure the print via USB and install" on the printer list interface and check the USB printer option. Click the "Confirm" button, and the wireless network configuration interface will pop up. Input the wireless SSID and password that you need, then click "Confirm" button, and enter into installation process. The process may need some time, and the duration is related to your computer configuration, please wait patiently.

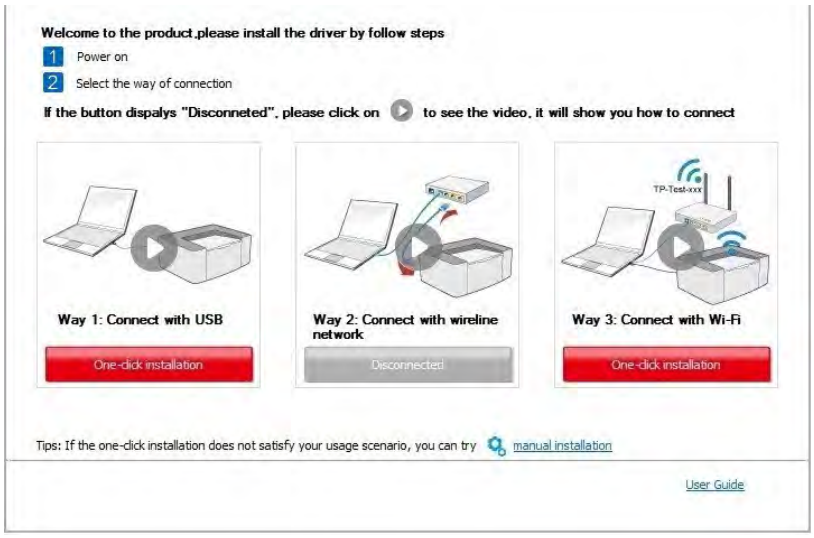

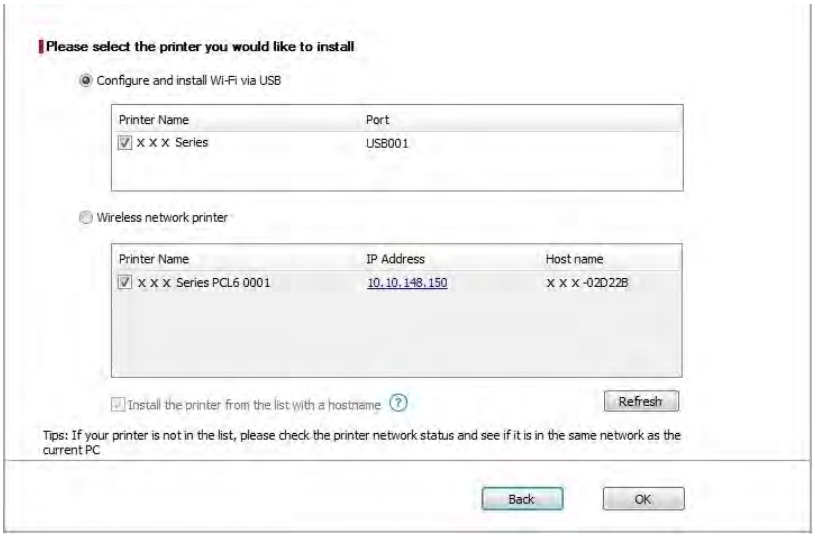

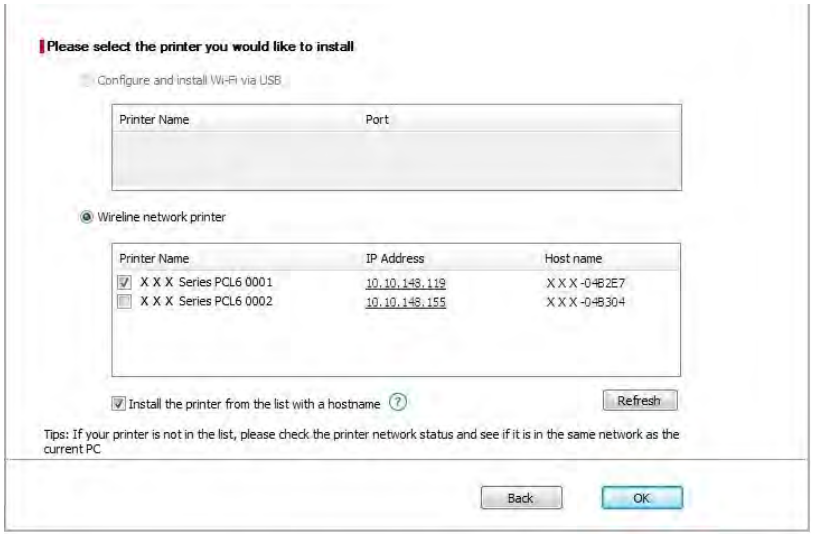

Note:• When the printer IP address changes under printer driver installed with host ID , you can also directly print without re-installing the driver. If you need to install the printer driver with the host ID, please check the option "Install the printer in the list with host ID".

6. After the installation, click "Print &Test Page" button. If your printer prints the test page successfully, it means that you have installed the driver correctly.

3.1.1.3.1.2. Connect computer to printer via Wi-Fi direct and install the driver

Connect the computer to printer via a direct Wi-Fi connection.It is applicable to wireless network without infrastructure mode, but it still needs scenario of temporary use of printer via wireless network. You can directly connect the computer that has wireless function to the printer to realize printing function.

1. Turn the power of printer and computer on.

2. Connect computer to the Wi-Fi Direct network of the printer (please refer to Chapter 5.2.2.2 for setup method).

3. Place the attached installation CD in the computer CD-ROM:

• Windows XP system: automatically run the installation procedure.

• Windows 7/Vista/Server 2008 system: Pop up "Autoplay" interface, click “Autorun.exe” to run the installation procedure.

• Windows 8 system: When the " DVD RW driver" window pops up from the right top corner of computer desktop, click anywhere in the pop-up window, then click "Autorun.exe" to run the installation procedure.

• Windows 10 system: When the "DVD RW driver" window pops up from the right top corner of computer desktop, click anywhere in the window, then click "Autorun.exe" to run the installation procedure.

Note:• Some computers may be unable to auto play the CD beacase of system configuration. Please double click "Computer" icon, find "DVD RW driver", then double click "DVD RW driver" to run the installation procedure.

4. Click on the "I agree" button on the right buttom corner after reading the license agreement and enter into driver installation interface.

5. Click on the "One-click installation" button in Method III, and enter into installation process. The process may need some time, and the duration is related to your computer configuration, please wait patiently.

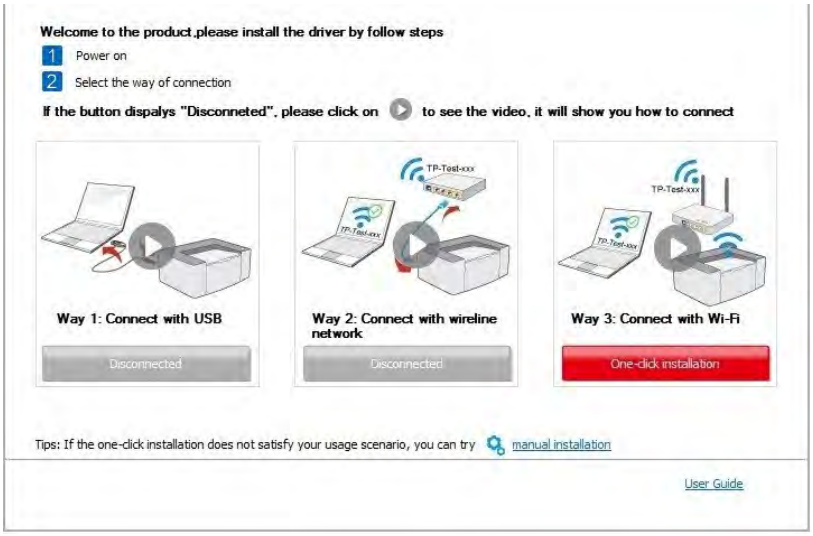

6. After the installation, click "Print &Test Page" button. If your printer prints the test page successfully, it means that you have installed the driver correctly.

3.1.1.3.2. The printer is already connected to wireless network

1. The printer is already connected to wireless network, you can print the "Network configuration page" to check.(See Chapter 12.4 to for how to print).

2. Connect the computer to printer network.

3. Place the attached installation CD in the computer CD-ROM:

• Windows XP system: automatically run the installation procedure.

• Windows 7/Vista/Server 2008 system: Pop up "Autoplay" interface, click “Autorun.exe” to run the installation procedure.

• Windows 8 system: When the " DVD RW driver" window pops up from the right top corner of computer desktop, click anywhere in the pop-up window, then click "Autorun.exe" to run the installation procedure.

• Windows 10 system: When the "DVD RW driver" window pops up from the right top corner of computer desktop, click anywhere in the window, then click "Autorun.exe" to run the installation procedure.

Note:• Some computers may be unable to auto play the CD beacase of system configuration. Please double click "Computer" icon, find "DVD RW driver", then double click "DVD RW driver" to run the installation procedure.

4. Click on the "I agree" button on the right buttom corner after reading the license agreement and enter into driver installation interface.

5. Click the "One-click installation" button in Method III to install driver software.

Note: • You can put your mouse cursor in the "One-click installation" button to check the popup information in order to confirm if the current printer is the one you need to install through IP address before you click the button.

• You can check the printer IP address through "Network configuration page" (Please seeChapter 12.4for how to print)

• Click on the "One-click installation" button to enter installation process if your software has searched only one printer. The process may need some time, and the duration is related to your computer configuration. Please wait patiently.

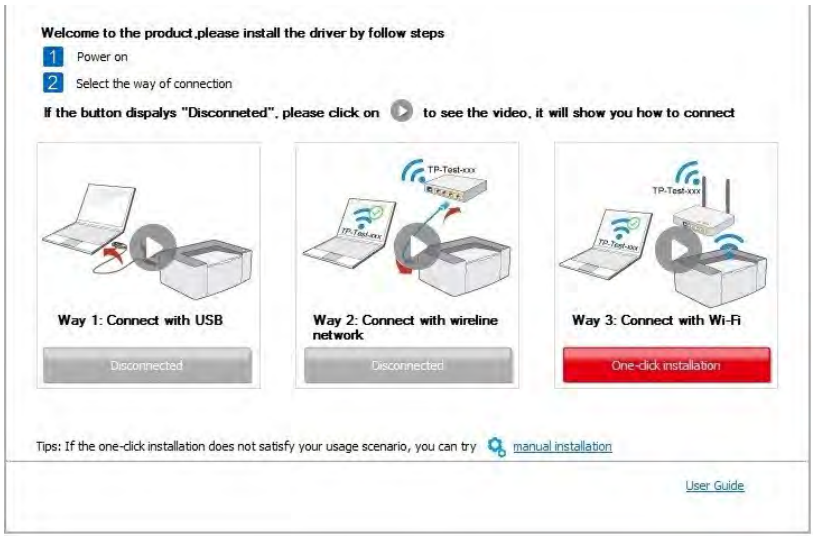

• If the software has searched several printers, the printer list interface will pop up. Please select the printer you need according to your printer wired network IP address or host ID.

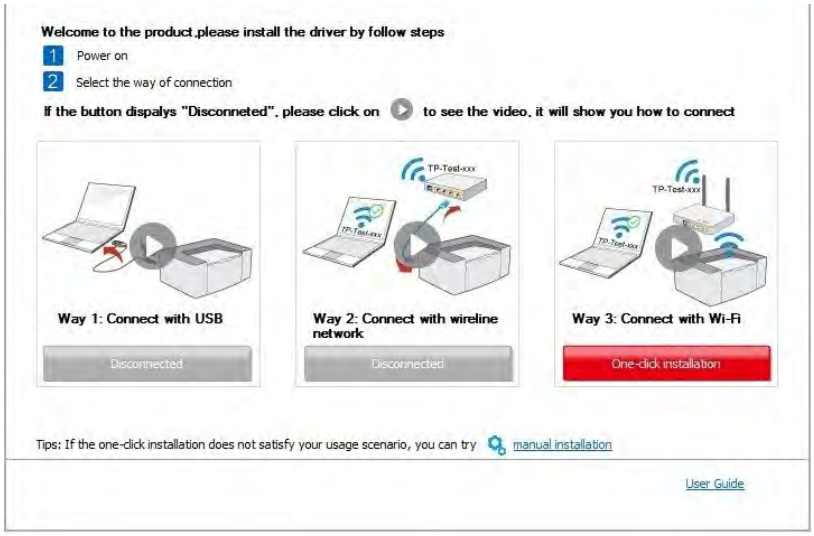

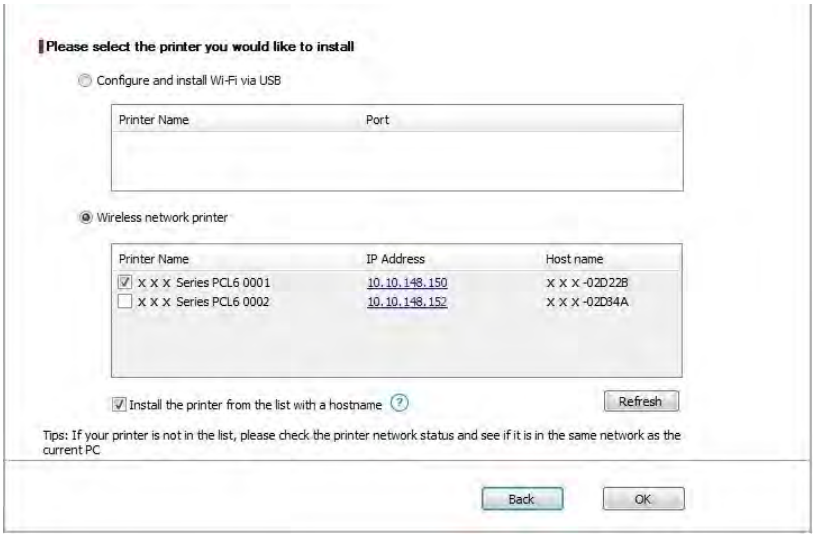

Note:• If the printer you need is not shown in the list, please click "Refresh" button to search again. If it is not found, please check if the printer and computer are in the same network. (Please see Chapter 5.3 for how to check).

• When the printer IP address changes under printer driver installed with host ID , you can also directly print without re-installing the driver. If you need to install the printer driver with the host ID, please check the option "Install the printer in the list with host ID".

6. After the installation, click "Print &Test Page" button. If your printer prints the test page successfully, it means that you have installed the driver correctly.

3.1.2. Manual installation

• Before installing the drive, you need to learn about printer model by printing printer information page out and check the product name (please refer to Chapter 12.4 for printing methods).

3.1.2.1. Installation via USB connection

1. Connect the printer to computer via USB cable, power the printer and computer on.
2. Place the attached installation CD in the computer CD-ROM:

• Windows XP system: automatically run the installation procedure.

• Windows 7/Vista/Server 2008 system: Pop up "Autoplay" interface, click “Autorun.exe” to run the installation procedure.

• Windows 8 system: When the " DVD RW driver" window pops up from the right top corner of computer desktop, click anywhere in the pop-up window, then click "Autorun.exe" to run the installation procedure.

• Windows 10 system: When the "DVD RW driver" window pops up from the right top corner of computer desktop, click anywhere in the window, then click "Autorun.exe" to run the installation procedure.

Note:• Some computers may be unable to auto play the CD beacase of system configuration. Please double click "Computer" icon, find "DVD RW driver", then double click "DVD RW driver" to run the installation procedure.

3. Click on the "I agree" button on the right buttom corner after reading the license agreement and enter into driver installation interface.

4. Click on the "Manual installation" at the bottom of driver installation interface, and enter into manual intallation interface.

5. Please select installation language and printer model.

6. Select "Connect via USB" and click on "Install".

7. The software installs the driver automatically and the installation process may need some time. The duration is related to your computer configuration, please wait patiently.

8. After the installation, click "Print &Test Page" button. If your printer prints the test page successfully, it means that you have installed the driver correctly.

3.1.2.2. Installation via wired network connection

1. Turn the power of printer and computer on.

2. Connect the computer to wired network.

3. Connect network cable to the network interface of printer, to make sure the printer is connected to computer network (please refer to Chapter 4 for network setup).

4. Place the attached installation CD in the computer CD-ROM:

• Windows XP system: automatically run the installation procedure.

• Windows 7/Vista/Server 2008 system: Pop up "Autoplay" interface, click “Autorun.exe” to run the installation procedure.

• Windows 8 system: When the " DVD RW driver" window pops up from the right top corner of computer desktop, click anywhere in the pop-up window, then click "Autorun.exe" to run the installation procedure.

• Windows 10 system: When the "DVD RW driver" window pops up from the right top corner of computer desktop, click anywhere in the window, then click "Autorun.exe" to run the installation procedure.

Note:• Some computers may be unable to auto play the CD beacase of system configuration. Please double click "Computer" icon, find "DVD RW driver", then double click "DVD RW driver" to run the installation procedure.

5. Click on the "I agree" button on the right buttom corner after reading the license agreement and enter into driver installation interface.

6. Click on the "Manual installation" at the bottom of driver installation interface, and enter into manual intallation interface.

7. Please select installation language and printer model.

8. Select "Wireline network connection" and click on "Install".

9. The installation software will search the printer automatically and the searching process may need some time.

10. After finishing searching, select the printer that needs to be connected and click “Next”.

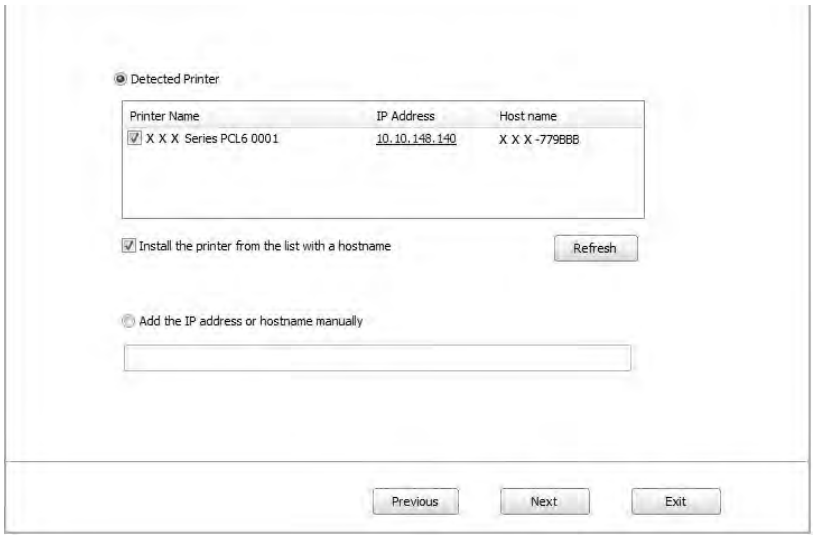

Note:• If the printer you need to connect is not in the list of printers searched, please click “Refresh” to search again.

• When the printer IP address changes under printer driver installed with host ID , you can also directly print without re-installing the driver. If you need to install the printer driver with the host ID, please check the option "Install the printer in the list with host ID".

• If IP address or host name is added manually, you need to know the IP address of the printer connected or host name. If they are not made clear, please print the “NetConf Pg” and view “IP Address” and “Host name” (Please refer to Chapter 12.4).

11. The software installs the driver automatically and the installation process may need some time. The duration is related to your computer configuration, please wait patiently.

12. After the installation, click "Print &Test Page" button. If your printer prints the test page successfully, it means that you have installed the driver correctly.

3.1.2.3. Installation by wireless network connection mode

Wireless network connection type is divided into basic structure mode and Wi-Fi Direct mode (please refer to Chapter 5 for details).

3.1.2.3.1. Installation in basic structure mode

1. Connect computer to access point (wireless router).

2. Connect the printer to computer via USB cable, then power the printer on.

3. Place the attached installation CD in the computer CD-ROM:

• Windows XP system: automatically run the installation procedure.

• Windows 7/Vista/Server 2008 system: Pop up "Autoplay" interface, click “Autorun.exe” to run the installation procedure.

• Windows 8 system: When the " DVD RW driver" window pops up from the right top corner of computer desktop, click anywhere in the pop-up window, then click "Autorun.exe" to run the installation procedure.

• Windows 10 system: When the "DVD RW driver" window pops up from the right top corner of computer desktop, click anywhere in the window, then click "Autorun.exe" to run the installation procedure.

Note:• Some computers may be unable to auto play the CD beacase of system configuration. Please double click "Computer" icon, find "DVD RW driver", then double click "DVD RW driver" to run the installation procedure.

4. Click on the "I agree" button on the right buttom corner after reading the license agreement and enter into driver installation interface.

5. Click on the "Manual installation" at the bottom of driver installation interface, and enter into manual intallation interface.

6. Please select installation language and printer model.

7. Select "Wireless network connection" and click on "Install".

8. Select “Yes, I want to configurate the printer's wireless network” on the wireless setup window popped out, and operate according to the prompts to set up the printer to wireless network (please refer to Chapter 5.1.1 for setup method).

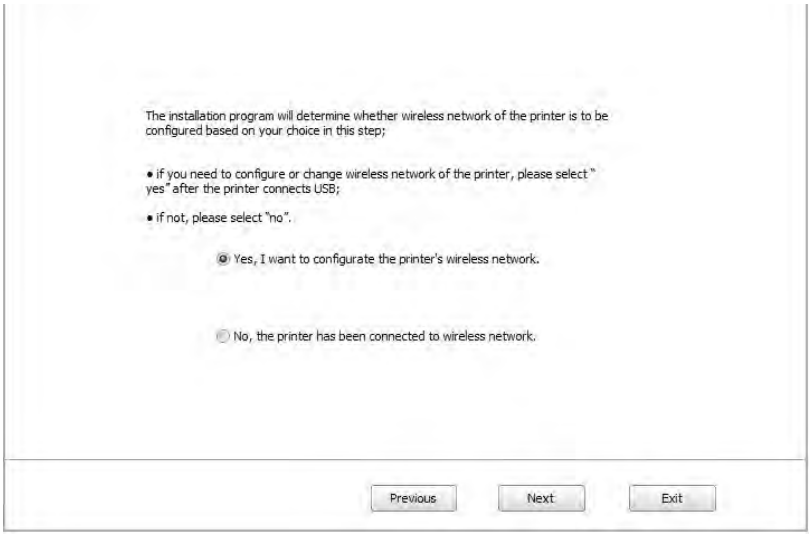

9. The installation software will search the printer automatically after wireless network is configured successfully. The search process may need some time.

10. Select the printer needs to be connected and click “Next”.

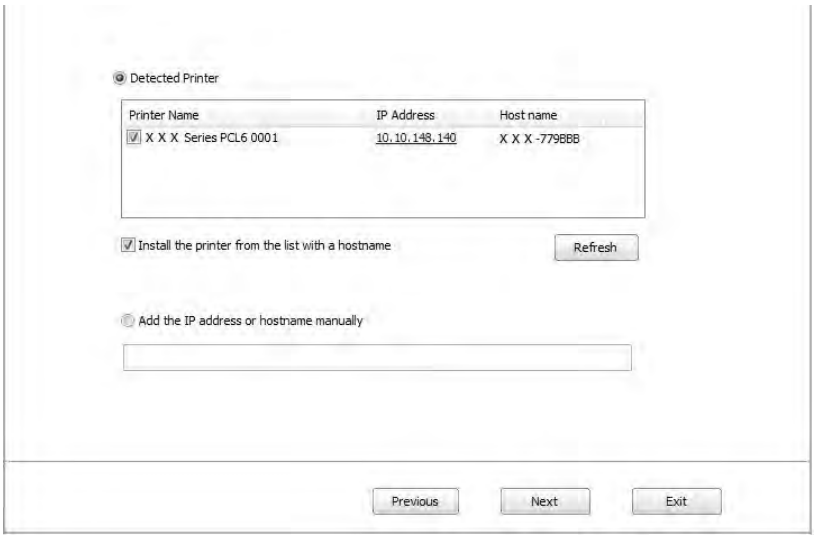

Note:• If the printer you need to connect is not in the list of printers searched, please click “Refresh” to search again.

• When the printer IP address changes under printer driver installed with host ID , you can also directly print without re-installing the driver. If you need to install the printer driver with the host ID, please check the option "Install the printer in the list with host ID".

• If IP address or host name is added manually, you need to know the IP address of the printer connected or host name. If they are not made clear, please print the “NetConf Pg” and view “IP Address” and “Host name” (Please refer to Chapter 12.4).

11. The software installs the driver automatically and the installation process may need some time. The duration is related to your computer configuration, please wait patiently.

12. After the installation, click "Print &Test Page" button. If your printer prints the test page successfully, it means that you have installed the driver correctly.

3.1.2.3.2. Installation in Wi-Fi Direct mode

1. Turn the power of printer and computer on.

2. Connect computer to the Wi-Fi Direct network of the printer (please refer to Chapter 5.2.2.2 for setup method).

3. Place the attached installation CD in the computer CD-ROM:

• Windows XP system: automatically run the installation procedure.

• Windows 7/Vista/Server 2008 system: Pop up "Autoplay" interface, click “Autorun.exe” to run the installation procedure.

• Windows 8 system: When the " DVD RW driver" window pops up from the right top corner of computer desktop, click anywhere in the pop-up window, then click "Autorun.exe" to run the installation procedure.

• Windows 10 system: When the "DVD RW driver" window pops up from the right top corner of computer desktop, click anywhere in the window, then click "Autorun.exe" to run the installation procedure.

Note:• Some computers may be unable to auto play the CD beacase of system configuration. Please double click "Computer" icon, find "DVD RW driver", then double click "DVD RW driver" to run the installation procedure.

4. Click on the "I agree" button on the right buttom corner after reading the license agreement and enter into driver installation interface.

5. Click on the "Manual installation" at the bottom of driver installation interface, and enter into manual intallation interface.

6. Please select installation language and printer model.

7. Select "Wireless network connection" and click on "Install".

8. Select “No, the printer has been connected to wireless network” on the wireless setup window popping out, and then click “Next”.

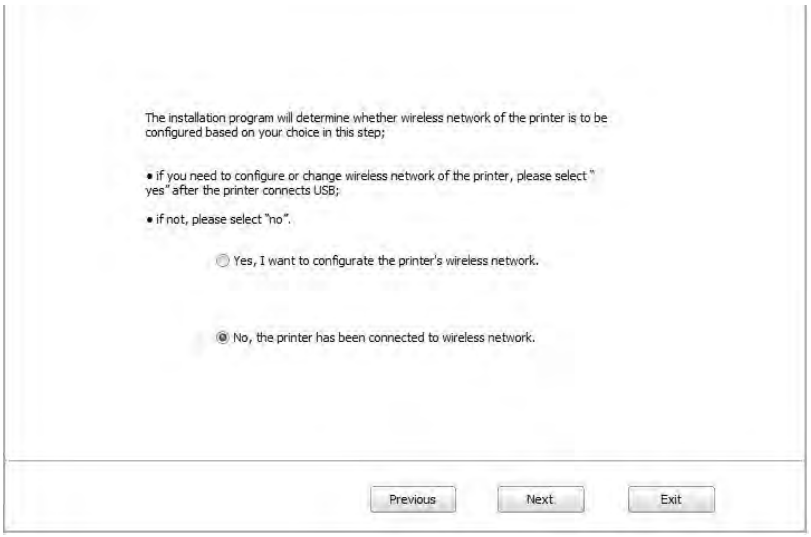

9. The installation software will search the printer automatically and the searching process may need some time.

10. Select the printer needs to be connected and click “Next”.

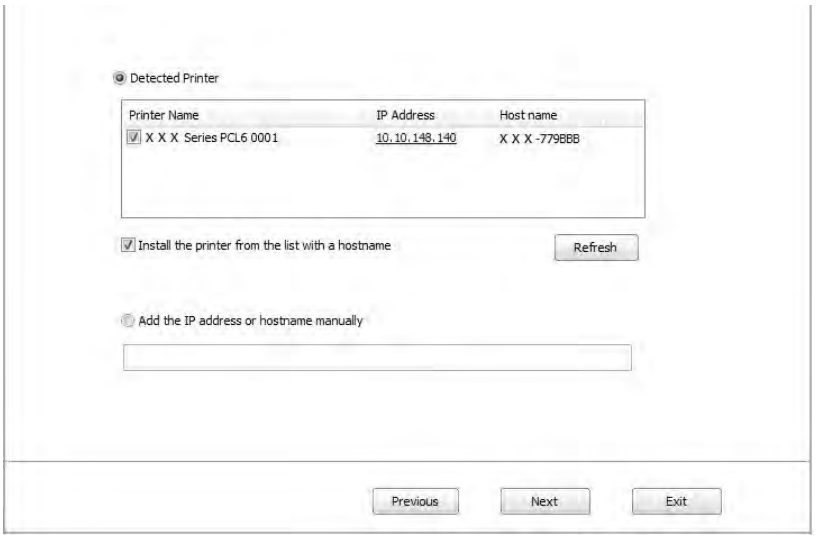

Note:• If the printer you need to connect is not in the list of printers searched, please click “Refresh” to search again.

• When the printer IP address changes under printer driver installed with host ID , you can also directly print without re-installing the driver. If you need to install the printer driver with the host ID, please check the option "Install the printer in the list with host ID".

• If IP address or host name is added manually, you need to know the IP address of the printer connected or host name. If they are not made clear, please print the “NetConf Pg” and view “IP Address” and “Host name” (Please refer to Chapter 12.4).

11. The software installs the driver automatically and the installation process may need some time. The duration is related to your computer configuration, please wait patiently.

12. After the installation, click "Print &Test Page" button. If your printer prints the test page successfully, it means that you have installed the driver correctly.

3.1.3. Method of driver unistallation

Windows 7 is taken as the example in the following operation. The information on your computer screen may differ because of multiple operating systems.

1. Click the Start menu of computer and then click All programs.
2. Click GG IMAGE, and then Click GG IMAGE XXX Series.

GG IMAGE XXX Series where XXX represents product model.

3. Click uninstall to delete the driver according to instructions on uninstall window.
4. Restart computer after finishing unloading.

3.2. macOS system driver installation

• Driver installation under macOS system is divided into 2 steps, driver installation and adding a printer. If you are going to print in AirPrint mode, there is no need to install a driver and you just need to add a printer directly.

• When you are installing a driver with wired or wireless network, you may need to know the Bonjour name of printer. Please print the “Network setup page” to view it. (Please refer to Chapter 12.4).

3.2.1. Driver installation

macOS 10.11 is taken as the example in the following operation. The information on your computer screen may differ because of multiple operating systems.

1. Turn the power of printer and computer on.

2. Insert the CD companying with printer in the CD driver of your computer, and double click GG IMAGE XXX Series installation package. (XXX in GG IMAGE XXX Series represents product model.)

3. Click “Continue”.

4. Read licensing agreement and then click “Continue”.

5. Click “Agree” on the prompt window popping out to accept the licensing agreement.

6. Click “Install”.

7. Input computer password and click “Install Software”.

8. Click “Continue Installation” on the prompt window popping out.
9. The system will finish driver installation automatically.

• If using a USB cable to connect a computer with a Wi-Fi model printer, a wireless network configuration prompt window will pop up during driver installation, as shown in following picture.

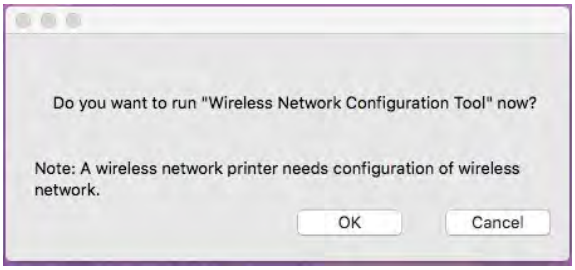

Note: • click “Yes”, you can configure printer’s wireless network via wireless network configuration tool (refer to Chapter 5.1.1 for how to make configuration).When configuration is completed, unplug USB cable, and then on the pop-up “Add Printer” interface, you may add the network-connected printer(refer to Chapter 3.3 for how to add printer).

• Click “No”, you can add a USB-connected printer on the pop-up “Add Printer” interface (refer to Chapter 3.3 for how to add printer).

If using a USB cable to connect a computer with a non-Wi-Fi model printer, a “Add Printer” interface will pop up during the driver installation and you can add a printer here (refer to Chapter 3.3 for how to add printer).

3.3. Add printer to macOS system

3.3.1. Add up the printer via USB

1. Connect the printer to computer with USB cable and then turn power on.
2. Enter the “System Preferences” – “Printers & Scanners” of computer.
3. Click + button to select “Add Printer or Scanner”.
4. Select printer and then select the corresponding printer mode from the “Use” menu popping out.
5. Click “Add”.

3.3.2. Add up the printer via wireline connection

1. Turn the power of printer and computer on.
2. Connect the computer to wired network.
3. Connect the network cable to the network interface of printer, and make sure the printer is connected to the computer network (Please refer to Chapter 4 for network setup).
4. Enter the “System Preferences” – “Printers & Scanners” of computer.
5. Click + button to select “Add Printer or Scanner”.
6. Select printer and then select the corresponding printer mode from the “Use” menu popping out.
7. Click “Add”.

3.3.3. Add up the printer via wireless connection

1. Turn the power of printer and computer on.
2. Make sure the wireless network connection between computer and printer is set up.

Note: • In case of basic structure mode, connect wireless network printer to the access point (wireless router). Please refer to Chapter 5.1 for connection method.
• In case of Wi-Fi Direct mode, connect wireless client to wireless network printer directly. Please refer to Chapter 5.2 for connection methods.

3. Enter the “System Preferences” – “Printers & Scanners” of computer.
4. Click + button to select “Add Printer or Scanner”.
5. Select printer and then select the corresponding printer mode from the “Use” menu popping out.
6. Click “Add”.

3.3.4. Add AirPrint printer

1. Turn the power of printer and computer on.
2. Make sure the connection between printer and computer is set up (USB connection or network connection).
3. Enter the “System Preferences” – “Printers & Scanners” of computer.
4. Click + button to select “Add Printer or Scanner”.
5. Select printer and select “Secure AirPrint” (data encryption) or “AirPrint” (no encryption) in the “Use” option box.
6. Click “Add”.

Note：
- When the printer is connected to computer with USB cable, the system will recognize and add AirPrint automatically.
- If AirPrint printer of network connection is added, then the connecting USB cable should be disconnected first before adding the printer.
- AirPrint printer is named after the ending of "AirPrint".

4. Wired network setup (applicable to wired network models)

In case printers support wired network printing, they can be connected to network to control printer to print in wired network mode.

4.1. Set IP Address

The IP address of the printer may be automatically obtained through DHCP function or set manually.

4.1.1. Automatic Setting

DHCP automatic setting function is enabled by default on the printer.

1. Connect the printer to the network through a network cable and complete the startup preparation work.

2. The printer will receive the IP address assigned by server automatically. It may take server minutes to receive IP address under the influence of network environment.

You can check the IP address of printer by printing "Network setup page" out (please refer to Chapter 12.4 for printing method) or check network information by viewing the control panel of printer (please refer to Chapter 12.3 for viewing methods). If the IP address is not listed, please check network environment and then try again after waiting for several minutes.

Note: • If DHCP server fails to assign IP address automatically, the printer will get the link-local address assigned by printer automatically: 169.254.xxx.xxx.

4.1.2. Manual Setting

To set up IP address for printer through the control panel of printer manually, please refer to Chapter 12.2 for details.

To set up IP address for printer through the embedded Web server manually, please refer to Chapter 6.2.1 for details.

5. Wireless network setup (applicable to Wi-Fi models)

Wireless network connection type is divided into basic structure mode and Wi-Fi Direct mode. If you have problems with wireless network setup, please refer to Chapter 5.3 Wireless Network Setup FAQs.

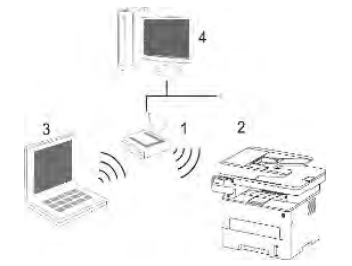	Basic structure mode: connecting to a wireless device via router 1. Access point (wireless router) 2. Wireless network printer 3. Computer connecting to access point via wireless network 4. Computer connecting to access point via network cable
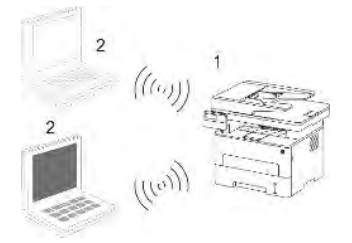	Wi-Fi Direct mode: wireless client is connecting to a printer with Wi-Fi function 1. Wireless network printer 2. Wireless client is directly connecting to a wireless network printer

5.1. Basic structure mode

You can connect a computer to your printer via access point (wireless router) as the medium. Access point (wireless router) connection is divided into wireless network setup and Wi-Fi Protected Setup (WPS).

Note: • The machine with the fax feature supports automatic search of wireless network through the printer's control panel to select the wireless network you desire and then input its password for connection.

Important: Before wireless network installation, you must learn about the service set identifier (SSID) and password of your access point in order to use them during wireless network setup. If they cannot be determined, please consult your network administrator or access point (wireless router) manufacturer.

5.1.1. Wireless network setup tools

If your computer has been installed with a driver and had been connected to wireless network, but the wireless network was changed, you can set it again with wireless network setup tools.

5.1.1.1. Preliminary preparations

1. Access point (wireless router).
2. A computer that has been connected to network.
3. A printer that has wireless network function.

5.1.1.2. Setup methods of wireless network setup tools

1. Take the wireless network setup tool in computer.

1) Windows system: Click the “Start menu” – “All programs” - “GG IMAGE”— Product name – “Wireless network setup tool”.

2) macOS system: click "Go" - "Applications" - " GG IMAGE" - "Utilities" - "Wireless Network Configuration Tool" on the computer Finder menu bar.

2. Use USB cable to connect and configure. Select "Yes, I have an USB cable that can be used for installation" in the following interface. Click "Next".

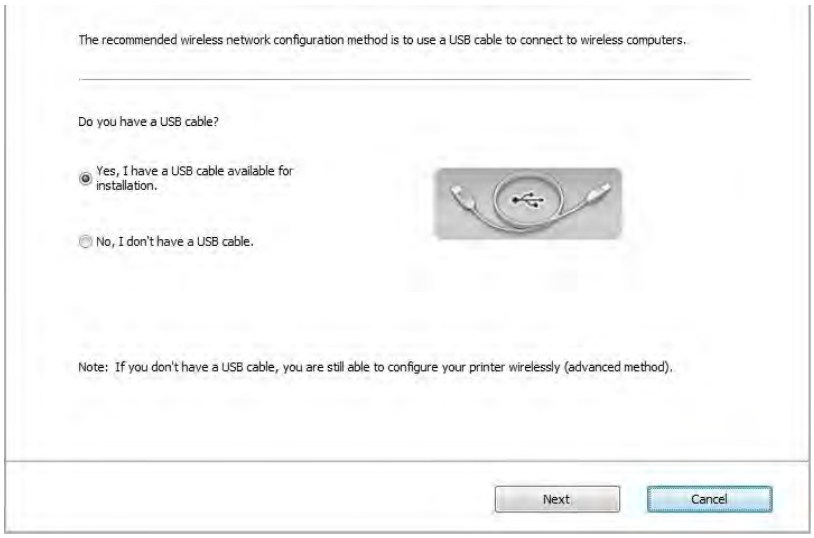

2.1 The computer has been connected to wireless network.

1) The currently wireless network currently connected to computer is selected as wireless network configuration tool by default. Complete configuration according to interface prompt.

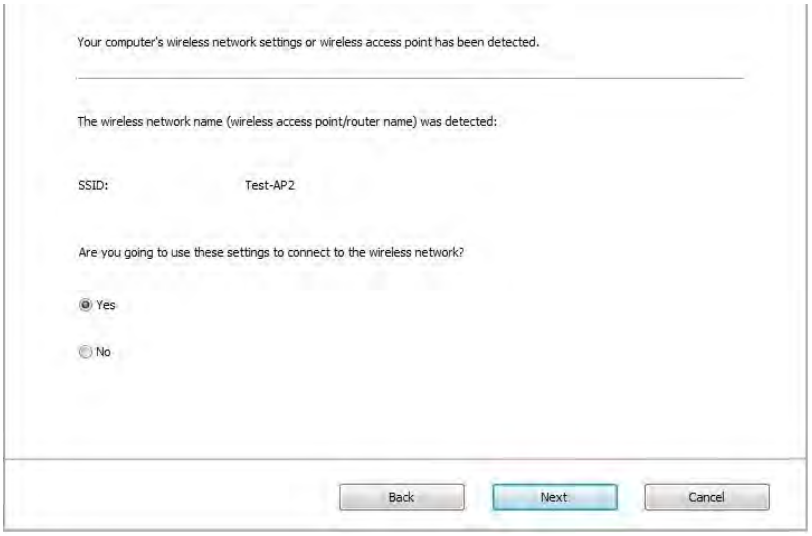

Note: • The SSID you selected should be consistent with the SSID of access point (wireless router) connected to your computer.

2) Please tick “No” to configure other wireless network needed to connect to. Complete configuration according to interface prompt.

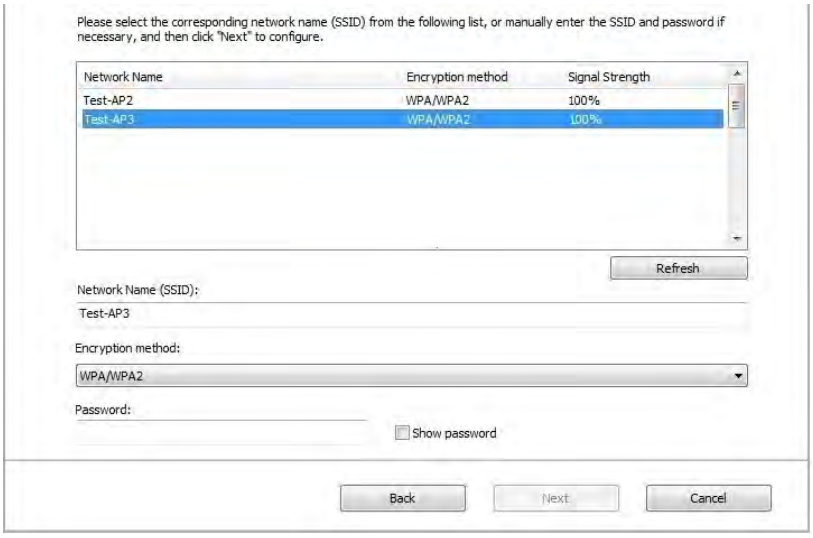

Note: • At present, the printer supports 3 types of safe modes: none, WEP and WPA/WPA2.

1) None: There is no encryption method used.

2) WEP: Send and receive data via security key by using WEP (Wired Equivalent Privacy). WEP key is applicable to 64-digit and 128-digit encrypted network and can contain numbers and letters at the same time.

3) WPA/WPA2: it is the pre-shared key (PSK) of Wi-Fi protected access which connects wireless device and access point via TKIP or AES encryption (WPS-Personal). The working length of WPA/WPA2 is within the PSK of 8-63 characters.

• The display password is not ticked by default; if it is ticked, all passwords input can be seen in clear text.

2.2 The computer is not connected to wireless network Input the SSID (case sensitive) and password of access point (wireless router) in the interface below. Complete configuration according to interface prompt.

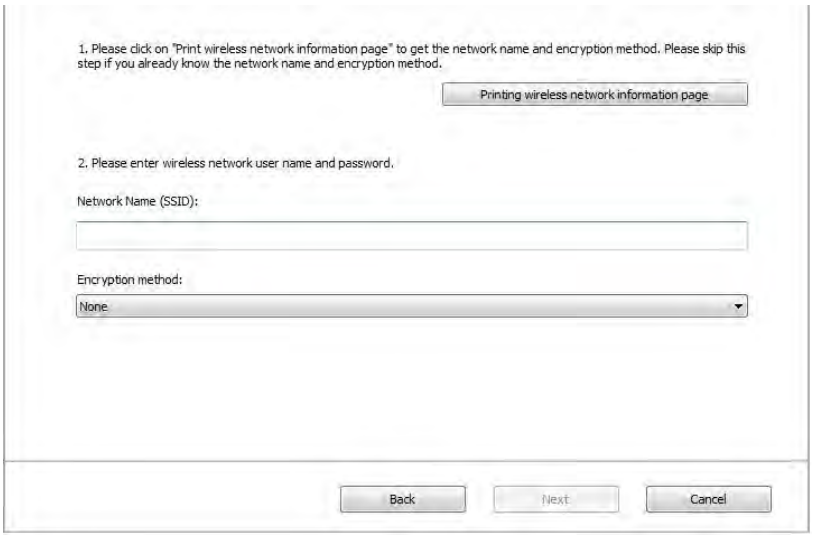

Note: • If you do not know the SSID of access point (wireless router), please click “Print Wireless Network Information Page” to view the SSID of the needed access point (wireless router).

• If the printer cannot be used normally after wireless network setup is finished, please install the drive again.

3. Use WPS connection.

Select “No, I don't have a USB cable” in the interface below and then click “Next”.

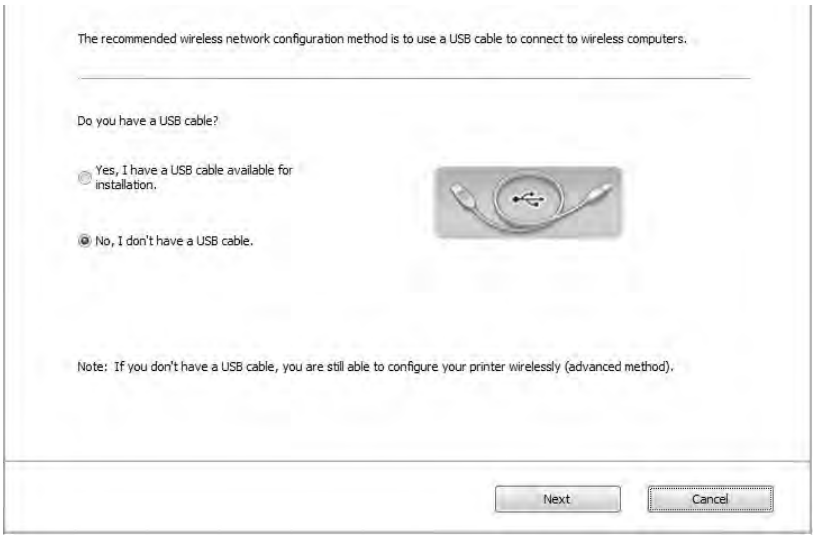

1) Use WPS method to perform steps below to start wireless network on printer. (Please refer to Chapter 5.1.2 for detailed WPS configuration)

2) Judge if the printer is successfully connected according to the status of Wi-Fi indicator on printer. If configuration failed, please click “Previous” to configure again; if configuration succeeded, please click “Done” to complete configuration.

Note: • If the printer cannot be used normally after wireless network setup is finished, please install the drive again.

5.1.2. Wi-Fi Protected Setup (WPS) setup

If the access point (wireless router) supports Wi-Fi Protected Setup (WPS), the Wi-Fi key on the control panel of printer and WPS key on access point (wireless router) can be pressed in order to connect the printer to wireless network.

5.1.2.1. Preliminary preparations

1. The access point (wireless router) supports Wi-Fi Protected Setup (WPS).
2. A printer that has wireless network function.

5.1.2.2. Wi-Fi Protected Setup (WPS) method

1. Turn on the power of printer and access point (wireless router).
2. Make sure the printer is in ready state.

Note: • If the printer is in sleep mode, it can be woken up by pressing any key on the control panel of printer.

3. Press "Wi-Fi" button on the printer panel for over 2s until the Wi-Fi indicator flashes in blue and then release the button.
4. Press the WPS key on access point (wireless router) within 2min and then release it.
5. When the access point (wireless router) and printer start to connect, the blue Wi-Fi indicator of printer starts to blink. The blue Wi-Fi indicator of printer will be normally on after successful connection.

If the connection is not established after more than 2min, the printer will return to its ready state, the Wi-Fi indicator will be off and Wi-Fi Protected Setup (WPS) connection will fail. If it is needed to connect again, please repeat steps 3-4 above.

Note: • Please refer to Chapter 1.5 for how to cancel and disconnect Wi-Fi connection.
• After successful Wi-Fi Protected Setup (WPS) connection, please install a driver if you want to print via wireless network.

5.1.3. How to disable the Wi-Fi network connected

Connect the wireless network in infrastructure mode by the steps above. If connected, the Wi-Fi light on the control panel is normally on. Press and hold this button for more than 2s to disconnect from Wi-Fi network (Wi-Fi light will be off).

5.2. Wi-Fi Direct mode

You can connect wireless client (including the computer and mobile device with wireless network feature) to wireless network printer without using the access point (wireless router).

5.2.1. Preliminary preparations

1. Printer with the Wi-Fi Direct feature.
2. Wireless client (including computer and mobile device with wireless network feature).

5.2.2. Wi-Fi Direct connection

Before connecting to printer hotspot, turn on direct Wi-Fi connection of the printer by short pressing "Wi-Fi" button on the panel.

Note: • Short press "Wi-Fi" button on the printer panel to automatically print out "Mobile Device Wi-Fi Connection Wizard" page for Wi-Fi connection by mobile devices.

5.2.2.1. Connection method of wireless client that supports Wi-Fi Direct feature (direct invitation to connect)

You must use mobile devices that support Wi-Fi Direct function for Wi-Fi Direct connection. The operating steps may differ because of the mobile device you are using.

1. Turn on printer power.
2. Turn on the mobile device and select setup to enter Wi-Fi connection interface.

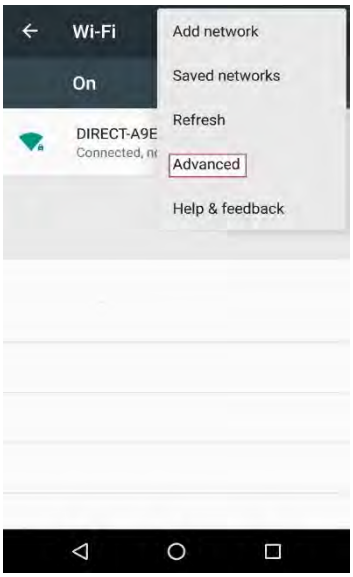

3. Select “Advanced” and then select “Wi-Fi Direct” in advanced WLAN interface.

4. Select printer SSID on direct interface to launch a connection invitation.

5. Press “OK key” to confirm connection when the panel lead to prompts whether to connect to start Wi-Fi Direct connection.

Note: • In case of auto connection mode, the mobile device will start to connect automatically after initiating connection invitation without panel confirmation.

5.2.2.2. Connection method of wireless client that does not support Wi-Fi Direct function (input password to connect)

1. Turn on printer power.

2. Press the “Menu key” – “Network Info” – “Wi-Fi dir. Info” on control panel of printer to view "SSID" and "Password".

3. Turn on the computer or mobile device with wireless network function; select the SSID of Wi-Fi Direct and input password to connect.

5.2.3. How to disable the Wi-Fi Direct

1. Turn on printer power.

2. Press "Menu", "Network Set", "Wi-Fi Direct" and then "Off" on the printer's control panel to disable Wi-Fi Direct.

5.3. Wireless network setup FAQs

1. The printer is not found.

• If the power of computer, access point (wireless router) or printer is turned on.

• If the computer is connected to printer with USB cable.

• If the printer supports wireless network connection.

2. SSID cannot be found when network is connected

• Inspect if the power switch of access point (wireless router) is turned on.

• The printer cannot find the SSID of the access point (wireless router) you need to connect, please check the SSID of access point and try to connect again.

• Every time when the setup of access point (wireless router) is changed, you must set up the wireless network of printer again.

3. Connection failure

• Please inspect if the safe mode and password of access point (wireless router) and printer is correct.

• Inspect the wireless receiving around printer. Signal receiving may be affected if the router is away from the printer or there is an obstacle between them.

• Turn the power of access point (wireless router) and printer off and then restart them and set up.

4. The following aspects should be inspected if the printer has problems while they are used in network:

• Inspect if the firewall software blocks communication. If the computer and printer are connected in the same network but they cannot be searched, the communication might be blocked by firewall software. Please refer to the user guide of firewall software to turn firewall off and then try to search the printer again.

• Inspect if the IP address assignment of printer is correct. You can inspect IP address by printing the network setup information page of printer out.

• Please refer to the following steps to check if printer and computer are in the same network:

1) Select "Command prompt" as shown below.

a. Windows 8/10 system：Select "Search" button in the Start Menu and input "Command prompt"in search bar，then press the "Enter”button in the keyboard.

b. Windows 7/Vista/XP system：click "Start" menu-"All procedures"-"Attachment"-"Command prompt ".

2) Input ping and your printer IP address in popup window, and press "Enter" button.

For example: ping XXX.XXX.XXX.XXX(“XXX.XXX.XXX.XXX” is printer IP address)

3) If RTT is indicated in the window, that is to say your printer and computer are in the same network.If RTT is not indicated in the window, please refer to Chapter 5 to re-configure the printer wireless network.

Note：• Please refer to the user guide or consult the manufacturer for information related to access point (wireless router).

6. Web server

You can manage printer setup via the embedded Web server.

6.1. Visit the embedded Web server

1. Turn on the power of printer and computer.

2. Connect the printer to network to ensure that the printer is connected to the network where the computer is connected to (please refer to Chapter 4 or Chapter 5 for network setup method).

3. Input the IP address of printer in the address bar of Web browser to visit the Web server imbedded in printer.

View the IP address of printer via control panel (please refer to Chapter 12.3) or print the "NetConf Pg" out to view the IP Address of printer (please refer to Chapter 12.4).

Note: • Windows users are suggested to use Microsoft Internet Explorer 8.0 (or higher version) or Firefox 1.0 (or higher version), macOS users are suggested to use Safari 4.0 (or higher version). No matter what kind of browser you are suing, please ensure that JavaScript and Cookies are always enabled. Please ensure compatibility with HTTP 1.0 and HTTP 1.1 when other network browsers are used.

• If the computer cannot visit the Web server embedded in printer, then your computer and printer may be connected to different networks. Please inspect your network environment or consult your network administrator.

4. Click "Log in" option, input user name and password (the default user name is admin and the initial password is 000000) and click "Log in".

Note: • For safety reasons, you are suggested to change the default password, which can be finished in the "User Management" interface.

6.2. Use Web server to manage printer

You can use the embedded Web server to manage printer.

1. View the basic information including product name, printer state and ink cartridge of printer.

2. Set up the network protocol parameters supported by printer.

3. Set up the wireless network connection of printer, and turn on/off wireless network and Wi-Fi Direct function.

4. Set up mail server client and acquire printer state via E-mail notification.

5. It supports to configure e-mail address and FTP address to scan the file to be scanned directly to E-mail box or FTP server.

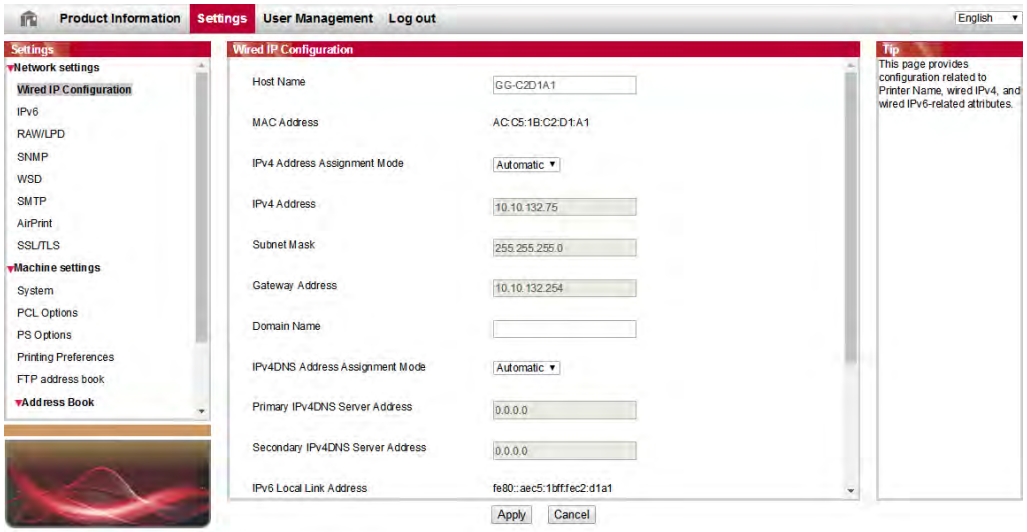

6.2.1. IP address setup

You need to connect your printer to network before IP address setup.

1. In case of wired network model, connect the printer to wired network by connecting to its network interface with network cable.

2. In case of wireless network model, the printer can be connected to wireless network via wireless network setup tools or Wi-Fi Protected Setup(WPS) (please refer to Chapter 5.1).

6.2.1.1. IPv4 setup

IPv4 address of the printer is divided into DHCP auto assignment and manual setting, and the DHCP auto assignment function is on by default. You can set up the IPv4 address of printer manually to set up fixed IPv4 address for the printer.

1. Turn on printer power to connect printer to network.

2. Log in the embedded Web server (please refer to Chapter 6.1 for login method).

3. Click “Settings” – “Network settings” – “Protocol Settings” – “Wired IP Configuration”.

4. Set the IPv4 address assignment mode as “Manual”.

5. Input “IPv4 Address”, “Subnet Mask” and “Gateway Address”, and then click “Apply”.

6.2.1.2. IPv6 setup

1. Turn on printer power to connect printer to network.

2. Log in the embedded Web server (please refer to Chapter 6.1 for login method).

3. Click “Settings” – “Network settings” – “Protocol Settings” – “IPv6”.

4. Tick “Enable IPv6 protocol” and “Enable DHCPv6” (ticked by default) and then click “Apply”.

You can refresh the browser and view the “IPv6 Local Link Address” and “Stateful Address” in “Wired IP Configuration” interface.

Note: The printer supports using the following IPv6 addresses for network printing and management(please refer to Chapter 12.4 and print “NetConf Pg” view IPv6 address).

• IPv6 local-link address: local IPv6 address set up by oneself (addresses beginning with FE80).

• Stateful address: IPv6 address set up by DHCPv6 server (if there is no DHCPv6 server in network, the “Stateful Address” cannot be assigned).

• Stateless address: IPv6 address set up by network router automatically.

6.2.2. Wireless setup

You can set up the wireless network, wireless IP setup, Wi-Fi Direct and WPS via wireless setup page. Before setup, please log in the embedded Web server (please refer to Chapter 6.1 for login method).

6.2.2.1. Wireless network

1. Click “Settings” – “Network settings” – “Wireless setup” – “Wireless Network”.

1) If you need to set up wireless network, please click the SSID of access point (wireless router) in search list, input secret key and click “Apply”.

6.2.2.2. Wireless IP setup

Only when the wireless network of printer is turned on, the Wireless IP Configuration can be displayed on Web server.

1. Click “Settings” – “Network settings” – “Wireless setup” – “Wireless IP Configuration”.

1) DHCPv4 is ticked by default. If IP address needs to be set up manually, please cancel the DHCPv4 checkbox ticked and input the “IPv4 Address”, “Subnet Mask” and “Gateway Address” that you need to set up and then click “Apply”.

6.2.2.3. WPS setup

1. Click “Settings” – “Network settings” – “Wireless setup” – “WPS”.

1) Select the “WPS Startup Method” you need, and then click “Apply” and operate according to page prompt.

6.2.2.4. Wi-Fi Direct setup

1. Click “Settings” – “Network settings” – “Wireless setup” – “Wi-Fi Direct”.

Note: • If Auto selected, the mobile terminal will realize automatic connection upon initiating the connection invitation without the need of confirmation on panel.

• If Manual selected, the mobile terminal cannot realize connection until initiating the connection invitation prior to confirmation on panel.

6.2.3. Machine setup

You can add mail address contacts, set up e-mail notification, set up sleep time and recover factory settings via machine setup page.

6.2.3.1. Set up e-mail notification

If you set up e-mail notification, an e-mail will be sent to the mail address specified by you when abnormality such as paper out occurs. You can receive emails only if you made correct email setup. Please consult your network administrator for detailed setup steps. You need to log in the embedded Web server before setting up email notification (please refer to Chapter 6.1 for login method).

I. Set up SMTP client

1. Click “Settings” – “Network settings” – “Protocol Settings” – “SMTP”.

2. On SMTP page, input SMTP server address, set up the mailbox login name and password and then click “Apply”.

II. Add recipient address

1. Click “Settings” – “Machine settings” – “Address Book” .

2. Click “Add”, input recipient address and then click “Apply”.

III. Set up email notification

1. Click “Settings” – “Machine settings” – “E-mail Notification”.

2. Click button and select the email addresses you want to add in the list of contacts popping out.

You can also tick “address X” (such as address 1) and input the email addresses you want to add.

3. Tick the email addresses and notification contents you want to notify and then click “Apply”.

6.2.3.2. Configure the E-mail address book

If you want to scan a file to an e-mail address, you need to configure the e-mail address book first and then scan the file to the assigned e-mail address.The e-mail will not be received before proper setting on the e-mail box; for specific setting steps, please consult your network administrator.

I. Set the E-mail address book

1. Log in the embedded Web server (please refer to Chapter 6.1 for login method).

2. Click "Settings", "Machine Settings" and then "E-mail Address Book" to enter the setting interface of e-mail address book.

3. Click "Create" to pop out a window as below and edit the contact name and input the e-mail address, and then click "Apply".

Note: • If some groups have been created, you may click to check a corresponding group to add the newly created e-mail address into it.

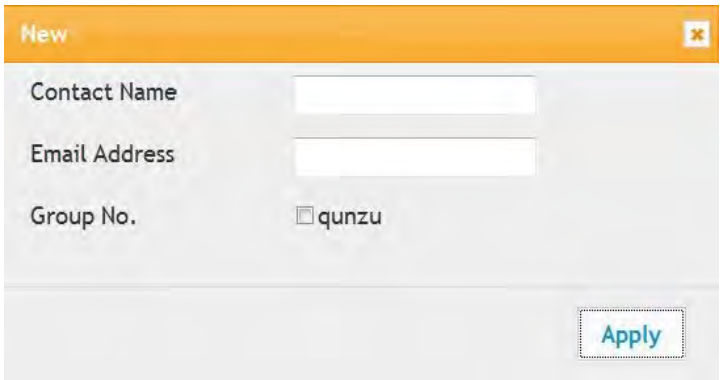

II. Set the e-mail group

1. Log in the embedded Web server (please refer to Chapter 6.1 for login method).

2. Click “Settings”, “Machine Settings” and then “E-mail Group” to enter the setting interface of e-mail group.

3. Click “Create” to pop out a window as below and edit the group name and check the e-mail address to be added in the contact name (e-mail address) listbox, and then click "Apply".

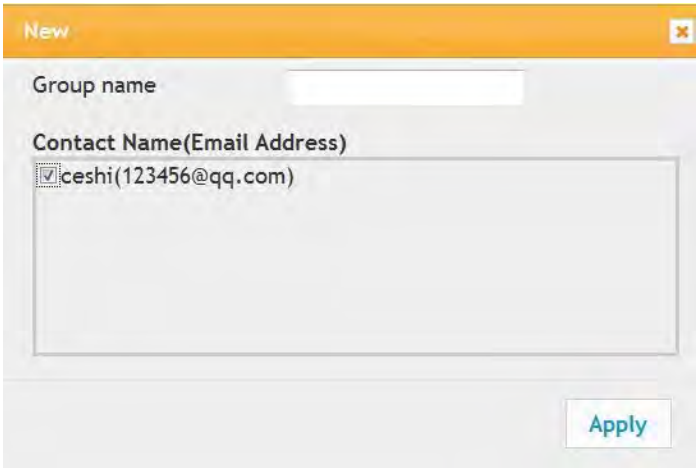

6.2.3.3. Configure the FTP address book

If you want to scan a file to the FTP server, you need to configure the FTP address book first.When scanning, you may send the image scanned to the FTP server.Before configuring the FTP address book, you may need to ask your network administrator for the server IP address, port number, login name, password and server name.

1. Log in the embedded Web server (please refer to Chapter 6.1 for login method).

2. Click "Settings", "Machine Settings" and then "FTP Address Book" to enter the setting interface of FTP address book.

3. Click "Create" to pop out a window as below and set relevant parameters; after settings completed, and then click "Apply".

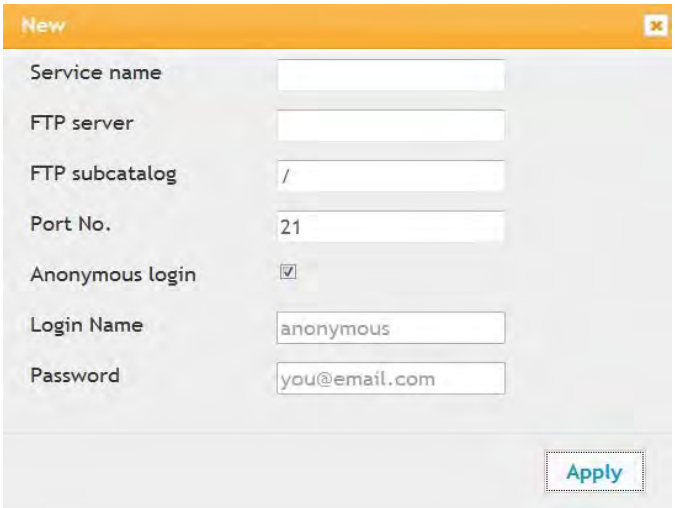

6.2.3.4. Sleep time setup

1. Log in the embedded Web server (please refer to Chapter 6.1 for login method).
2. Click “Settings” – “Machine settings” – “System”.
3. Select sleep time according to you need and then click “Apply”.

6.2.4. Recover factory settings via Web server

1. Log in the embedded Web server (please refer to Chapter 6.1 for login method).
2. Click "User Management" and input the correct “User name” and “Password”; then, click “Restore to Factory Settings”. After completion, the printer will reboot automatically.

Note: • After factory settings of printer are recovered, user name of the administrator will be recovered to admin and the login password will be recovered to 000000.

• You can also recover factory settings via keys on the control panel of printer, please refer to Chapter 12.1.3 .

7. Print

7.1. Print Function

You can set the print function through "Start"-"Devices and Printers"- select corresponding printer- right click – set print function in "Printing preferences". Some functions are as follows:

Functions	Diagram
Automatic Two-Sided Printing	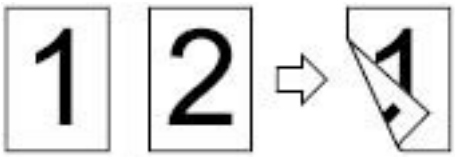
Collate Print	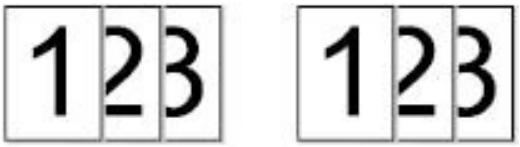
Reverse Print	
N-in-1	
Poster Print(for Windows Operation System only)	
Zoom Print	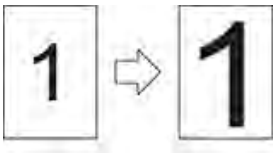
Custom Size	

Note: • Windows 7 is taken as example in the above description.
• You can realize poster printing feature by selecting 2x2 poster printing in multipage.
• You can enable printing preference and click the help button to view detailed function description. Please refer to Chapter 7.9 for the method to open help document.

7.2. Print Settings

You can set up printing parameters with the following two methods before sending printing work (such as paper type, paper size and paper source).

Operating system	Temporary printing setup change	Permanent default setup change
Windows 7	1. Click “File” menu – “Print” – “Select printer" - “Printer properties” (the detailed steps may differ because of multiple operating systems).	1. Click “Start” menu- “Control Panel” – “Devices and Printers”. 2. Right click on the printer icon, select “Printing preference” and then change setup and save it.
macOS	1. Click “File” menu – “Print”. 2. Change setup in the window popping out.	1. Click “File” menu – “Print”. 2. Change setup in the window popping out and click to save the preset. (Select preset every time before printing, or print according to default setup.)

Note: • Priority of App setup is senior to printer setup.

7.3. Cancel printing

If you want to cancel the operation during printing, please press “Cancel” key on the printer's control panel.

7.4. Printing Mode

The printer can print with auto feed tray and manual feed tray. The defaulted state is auto selection, and if there is printing medium in the manual feed box, papers in manual feed tray will be used with priority.

7.4.1. Printing with the Automatic Feeder Tray

Before printing, please make sure mediums of corresponding quantity have been installed inside the auto feed tray, and there is no printing medium in the manual feed tray.

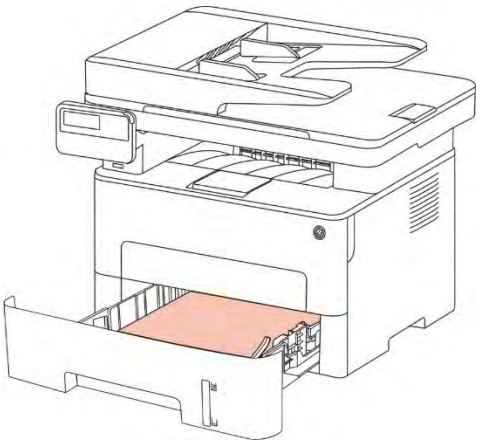

Note: • For precautions on loading paper, see Chapter 2.
• For the type of media to be printed with the automatic feeder tray, see Chapter 2.1.

7.4.2. Printing with manual feed tray

When you put papers in the manual feed tray, the printer will enter manual feed mode.

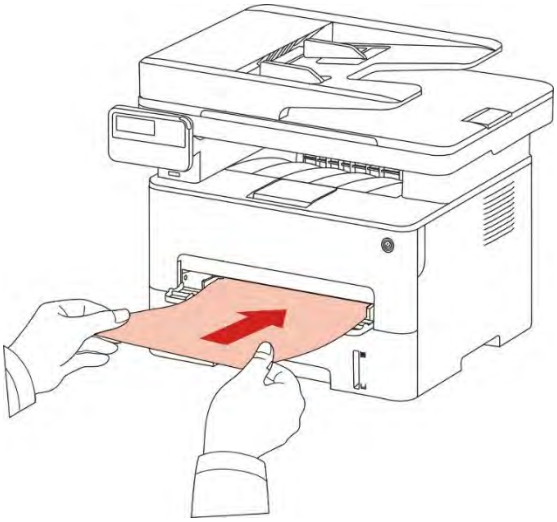

Note: • Manual feed mode means that papers will be fed from the manual feed tray first if there are papers being put inside it.

• Generally, the manual feeder tray is used to print on special paper, such as envelopes, transparencies, etc., and only one piece of paper can be loaded each time.

• Please refer to Chapter 2 for putting papers inside manual feed tray.

• Please refer to Chapter 2.1 for type of mediums that can be printed via manual feed tray.

7.5. Automatic Two-Sided Printing

The printer supports automatic two-sided printing of plain paper. Paper size supported by the automatic two-sided printing: A4,Letter, Legal, Oficio, Folio,16K.

Note: • Trying the automatic two-sided printing may damage the printer if some paper media are not suitable for automatic two-sided printing.

• Auto duplex printing does not support poster printing.

• Please refer to Chapter 2 for paper loading and type of mediums that can be printed via auto feed tray.

7.5.1. Duplex printing unit setup

For the purpose of achieving the best printing result, you can set up the paper size of duplex printing unit. As for duplex printing of A4 and 16K papers, the slide should be adjusted to the A4 position; as for Letter, Legal, Folio and Oficio duplex printing, the slide should be adjusted to the Letter position.

Setup steps of duplex unit are:

1. Draw out duplex unit.

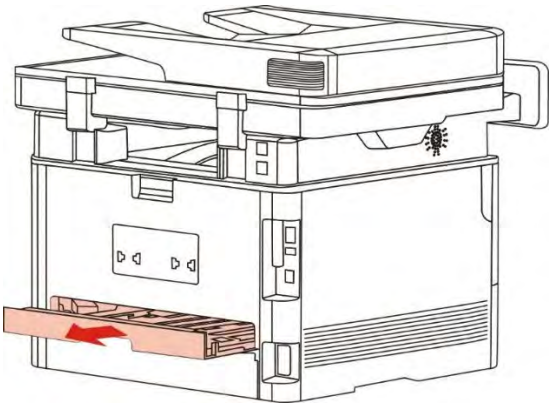

2. Make the backside of duplex unit up.

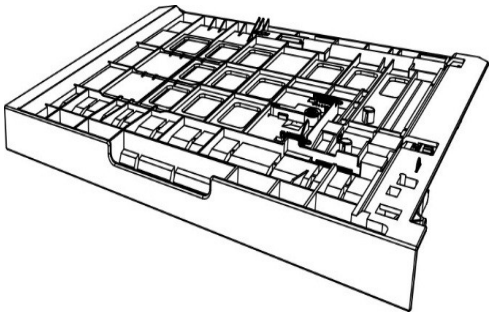

3. Adjust paper size slide to A4 or Letter position to finish setting up.

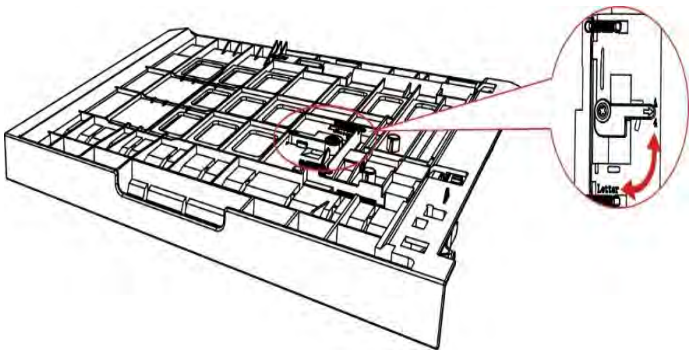

4. Install the duplex unit in the printer.

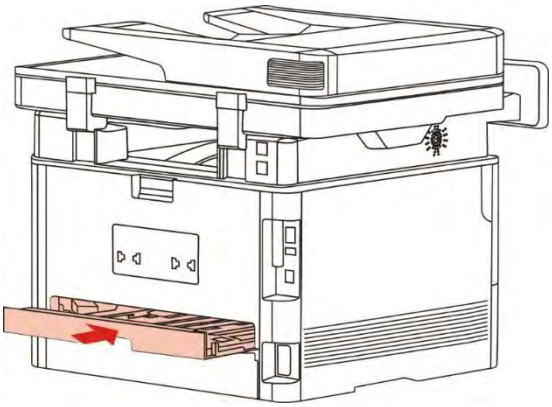

7.5.2. How to carry out auto duplex printing

1. Open the print job to be printed from the application (such as a Notepad).
2. Select Print from the File menu.

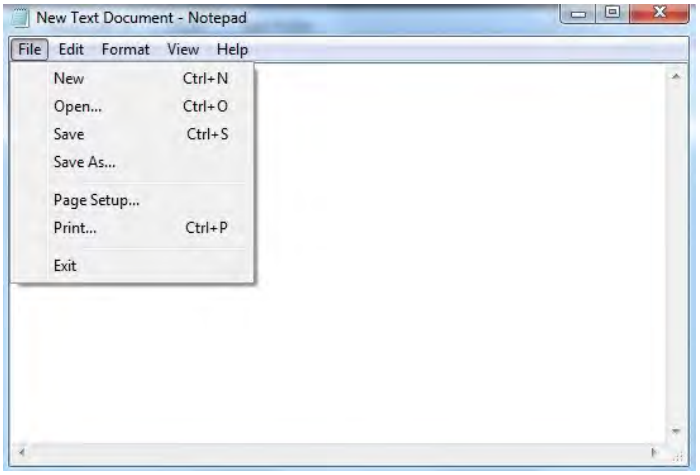

3. Select printer of the corresponding model.

4. Single click “Preferences” for printing setup.
5. Select the “Duplex” in “Basic” tab and then select “Long Edge” or “Short Edge”.

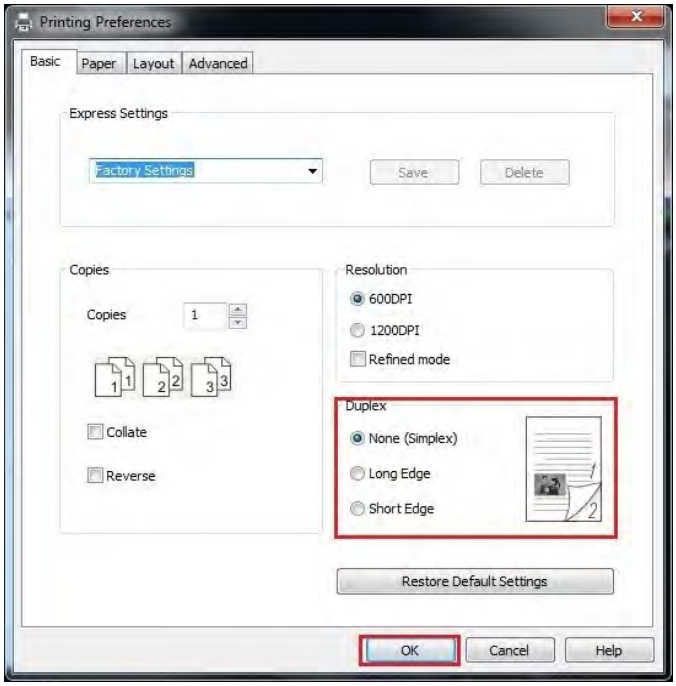

6. Single click “OK” to finish printing setup. Click “Print” to realize auto duplex printing.

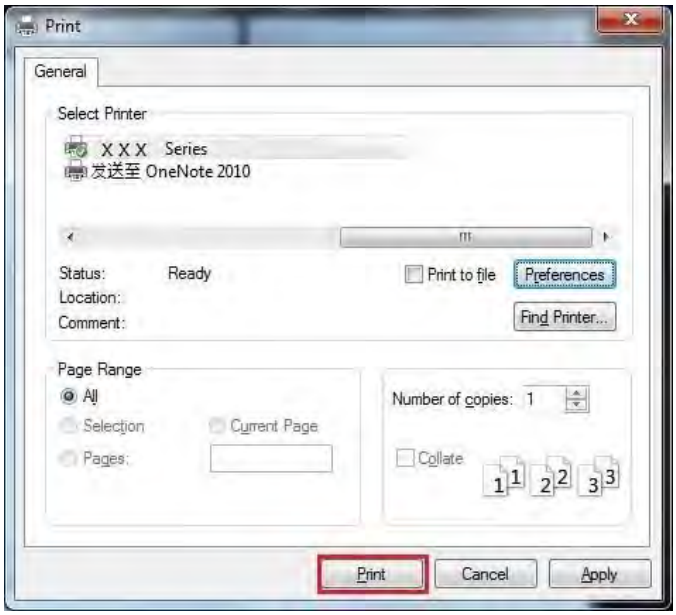

7.6. Fine mode printing

The Fine mode is applicable to engineering drawings and fine lines printing.

Set up fine mode in the basic page of printer preference . After setup, fine printing mode can be realized.

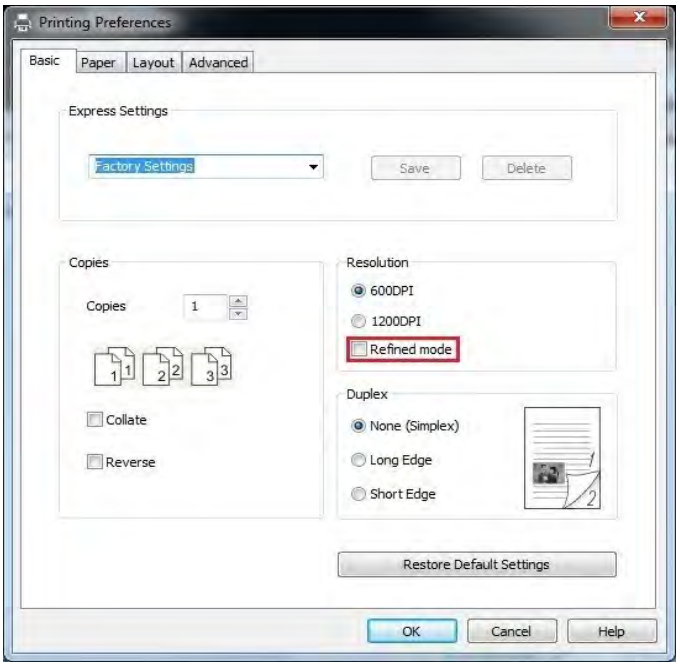

7.7. Mute printing

If the Mute Printing is set, the printing noise will be reduced but the printing will slow down to some extent.

The operating steps of mute printing are as follows (applicable to printers that are installed via USB connection)

Windows 7 is taken as the example in the following operation. The information on your computer screen may differ because of multiple operating systems.

1. Enter the “Start menu” – “Control Panel” –view “Devices and Printers”.
2. Right click printer and select “Printer properties” in the pull-down menu.
3. Enter the “Secondary Settings” option.
4. Tick “Mute printing” and click “Ok” to finish setup.

5. Open the printing work from the App, select a printer of the corresponding model and then set up printing according to needs.
6. Click “Print” to realize mute printing.

Note: • Printers with LCD control panel can be set to mute printing with keys on control panel directly, please refer to Chapter 12.1.5.

7.8. Auto shut-off setting

“Auto shut-off setting” to set off condition and off delay of printer.

1. Enter computer “Start Menu” – “Control Panel” – View “Devices and Printers”.
2. Right click printer, select “Printer properties” in drop-down list.
3. Enter “Secondary Settings” option and set “Auto shu-off setting”.
4. Click “OK” to finish setting.

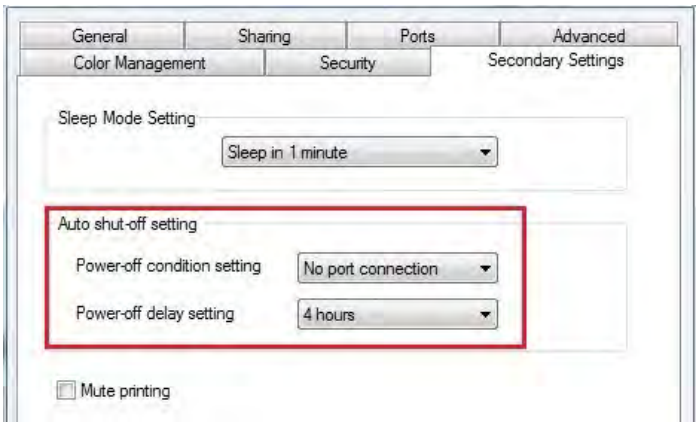

Note: • For printer provided with LCD control panel, users may set auto off function through control panel keys. Please refer to Chapter 12.1.7.
• Individual countries (or regions) do not support auto off setting.

7.9. Open Help Document

You can open the "Printing preferences" and click "Help" button (for Windows Operation System only). The help document contains the user guide where you can find the information on print settings.

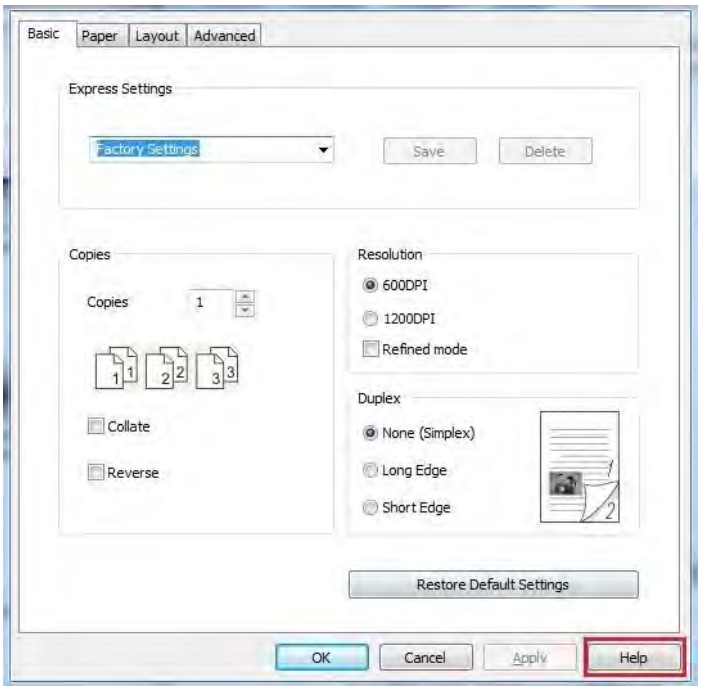

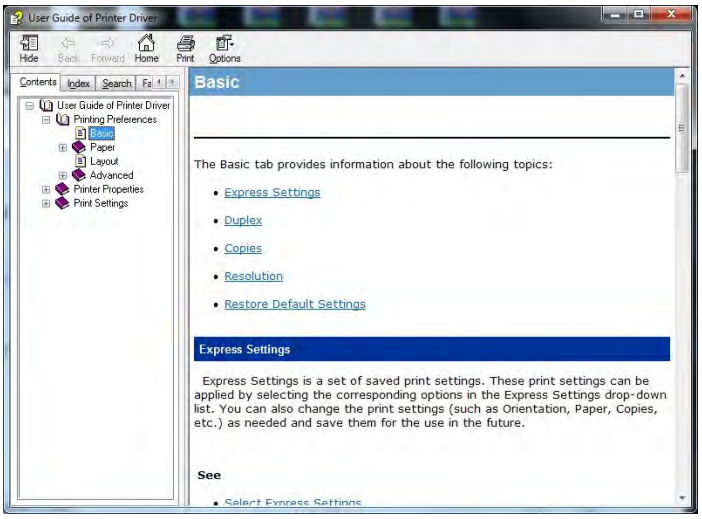

8. Copying

8.1. Copying function

Copy		Instructions
Common copying	Multipage	Print a multi-page document to a piece of paper.
	Clone	Print several identical images to a piece of paper.
	Poster	Print a one-page original to pieces of paper.
	Collated copy	Collate copies of an original.
	Duplex copying	It supports manual duplex copying for originals.
	Image quality	Set the definition mode to improve the copying effect.
	Intensity	Adjust deep-light copying effect by setting intensity.
	Resizing	Reduce or enlarge the size of image copied.
	Paper setting	Set the paper size and paper type.
ID card copying	Arrangement mode	Set the arrangement mode of ID card to be copied.
	Intensity	Adjust deep-light copying effect by setting intensity.
	Paper Size	Set the paper size.
Receipt copying	Intensity	Adjust deep-light copying effect by setting intensity.
	Paper Size	Set the paper size.

8.2. Copying method

1. Press “copying key"/"ID card copying key”/"receipt copying key” on control panel.
2. Put an original into the ADF with its front upward (only for plain copying) or on the glass platen with its front downward. (For how to put an original, please see Chapter 2.5.)
3. Set copying quantity with “direction or number key” according to types (99pieces at maximum).
4. Press “Startup key” for copying.
5. If the original is put on the glass platen, the printer will give a prompt of "Scan the Next Page" after scanning one page. If the next page exists, please remove the original scanned and put the next page on the glass platen; then, press "Start". After all pages have been scanned, please press "OK".

8.3. Copying cancel

Press “cancel key” on control panel if canceling copying.

8.4. Common copying setting

Change relevant setting with “copying setting menu” for better copying effect.

1. Press "Copy" and then "Menu" on control panel to enter the "Menu Setting" interface.
2. Press "OK" to enter the "Copy Setting" interface.
3. Press “direction key to select option to be set and press “OK key” to set option.

Note:• The image quality, intensity, resizing and paper setting can keep valid after options are set.

• Settings on all-in-one, clone, poster, collated copy and duplex copy will be restored to defaults after completing the copying, switching among panel keys or rebooting the machine.

8.4.1.Image quality

Select corresponding image quality mode for original document used in order to improve copying effect.

There are 4 modes in total:

Auto: default mode, applicable to text and image originals.

Text + image: applicable to originals with mixed text and image.

Image: applicable to original image.

Text: applicable to original text.

Note:• The image quality mode supports “automatic” mode only after “poster” and “collated copy” are set.

8.4.2. Intensity

Adjust deep-light copying effect by setting intensity.

This printer supports "Manual Adjustment" and "Auto Adjustment" in color intensity. 5 levels for manual adjustment and 3 levels for auto adjustment by default.

8.4.3. Resizing

When original document is copied, resize image copied.

The resizing includes “fixed” and “manual adjustment” and the default value is 100%.

1. Fixed resizing: 100%、141% A5->A4、122% A5->B5、115% B5->A4、97% LTR->A4、94% A4->LTR、86% A4->B5、81% B5->A5、70% A4->A5.

e.g.: 70% A4->A5：

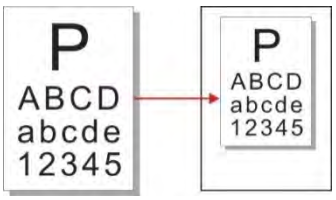

2. “Manual adjustment” applies to copying with glass platform only, the adjustment scope of which is 25%-400% and 5% can be adjusted each time after “direction key” is pressed once.

8.4.4. Multipage

With setting on all-in-one feature, a 2- or 4-page document could be copied to one piece of paper. Copying with the ADF and the glass platen are both supported.

The multipage includes 3 modes:

(1) Two-in-one:

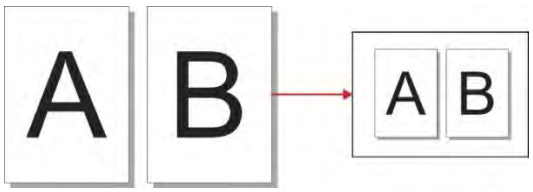

(2) Horizontal four-in-one:

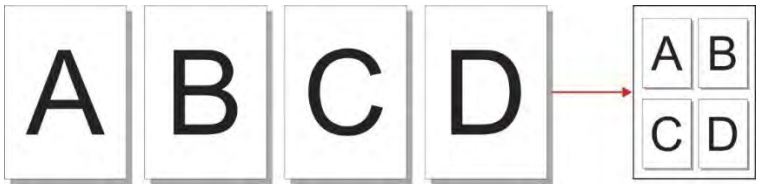

(3) vertical four-in-one:

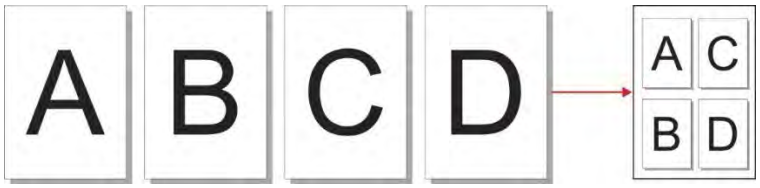

Note: • "Multipage" and “resizing function” cannot be set at the same time.

8.4.5. Clone

Through setting on clone feature, you may print multiple original images on one piece of paper. Copying with the ADF and the glass platen are both supported.

The clone copying includes 3 modes:

2x2: 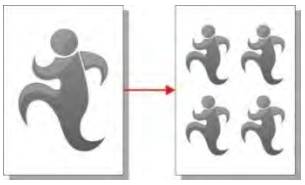 3x3: 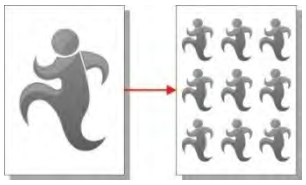 4X4: 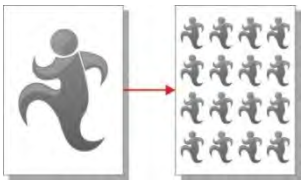

Note: • The “clone” and “resizing function” cannot be set at the same time.

8.4.6. Poster

Poster setting enables the printing of one piece of original document on several pieces of paper. The "Poster" feature supports only copying with the glass platen.

The poster copying includes 3 modes:

2x2: 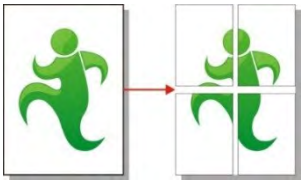 3x3: 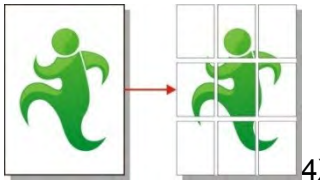 4X4: 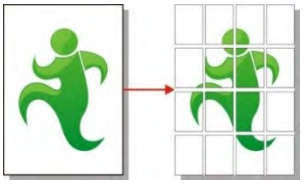

Note: • The “poster” and “resizing function” cannot be set at the same time.

8.4.7. Collated copy

The "Collated Copies" feature supports only copying with the automatic document feeder (ADF).

The collated copy includes 2 modes:

Startup:

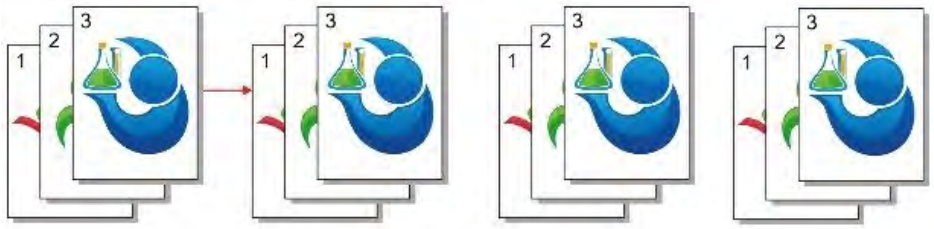

Closed:

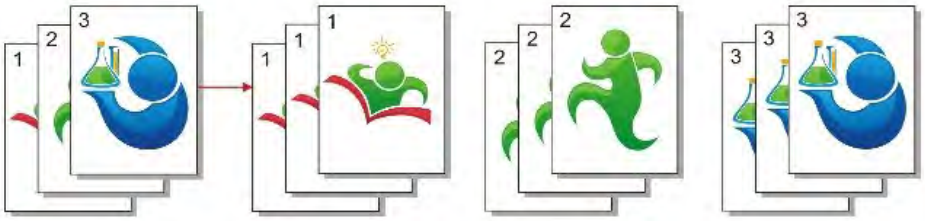

8.4.8. Manual duplex copying

You may use the glass platen or the ADF for duplex copying. The followings are examples of copying with the ADF.

There are 4 modes in total for duplex copying:

1. One-sided → One-sided: 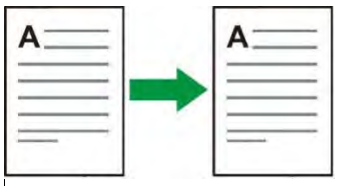

2. One-sided → Two-sided:

3. Two-sided → One-sided: 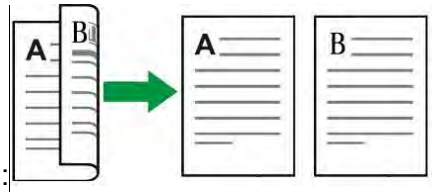

4. Two-sided → Two-sided: 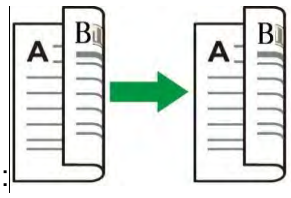

8.4.8.1. Steps of duplex original copying

1. Put an original into the ADF with its front upward and its top fed first; meanwhile, make sure there are some paper in the carton.

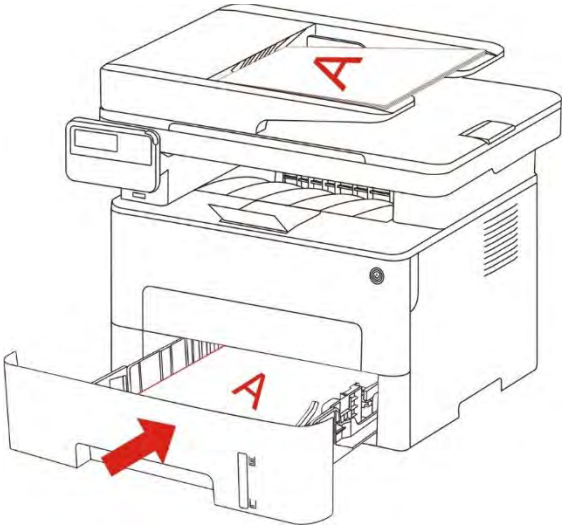

2. Operate following steps described in Chapter 8.4. Select Duplex Copying and then press “OK” to save settings.
3. Press “Start” to begin copying.
4. Paper exited should be with the direction as shown in the figure:

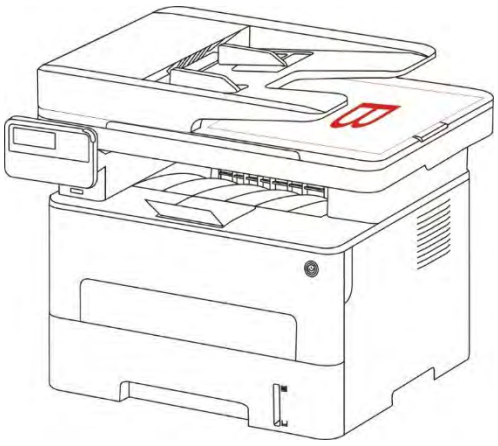

5. After completion of copying one side, put the paper into the entrance as shown in figure (without turnover or rotation).

Note:• If the turnover prompt on panel times out, the machine will execute one-sided copying automatically.

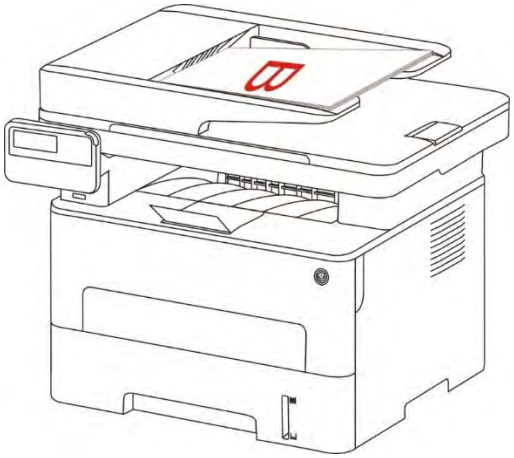

6. Press "Start" to begin copying the other side.

8.4.9. Paper setting

Select the paper size and paper type of original copying in Paper Settings menu.

Paper dimension: A4, Letter, B5, A5, A6, Executive, Legal and Folio.

Paper type: common paper, thick paper, envelope paper, film paper, card paper, tagboard and thin paper.

Note: • After “multipage” and “clone function” are set, “paper dimension” supports “A4” and “Letter” only.

• For copying with the ADF, only plain paper is available in "Paper Type".

8.5. ID card copying setting

For better copying effect, you can enter the “ID Card Copy Settings” menu to change relevant settings.

1. Press "ID Card Copy" and then "Menu" on control panel to enter the "Menu Settings" interface.
2. Press "OK" to enter the "ID Card Copy Settings" interface.
3. Press “direction key to select option to be set and press “OK key” to set option.

8.5.1.Arrangement mode

There are 4 arrange modes for ID card copying totally:

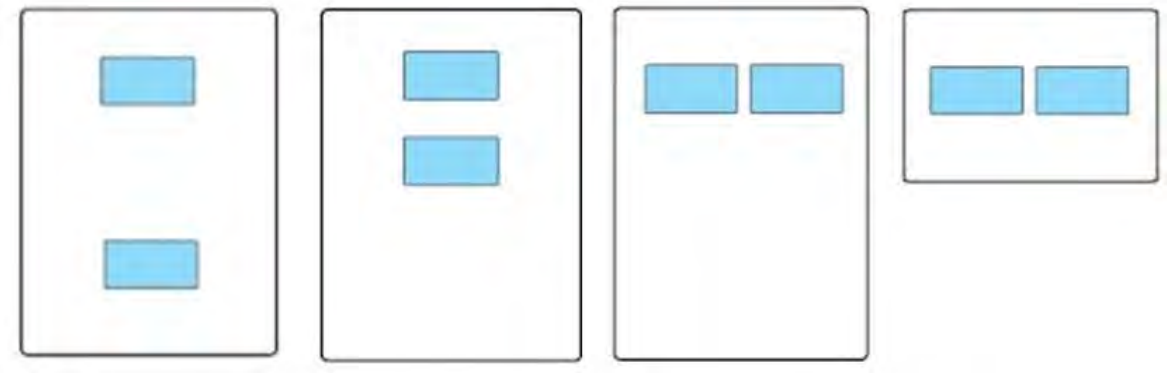

Whole page up-down | Half page up-down | Half page left-right | A5 left and right

Position:

Half page up-down: default mode; put ID card at “orange left half area” of glass platform.

Half-page up and down, half-page left and right or A5 left and right: put the ID card in the "blue area" in glass platen.

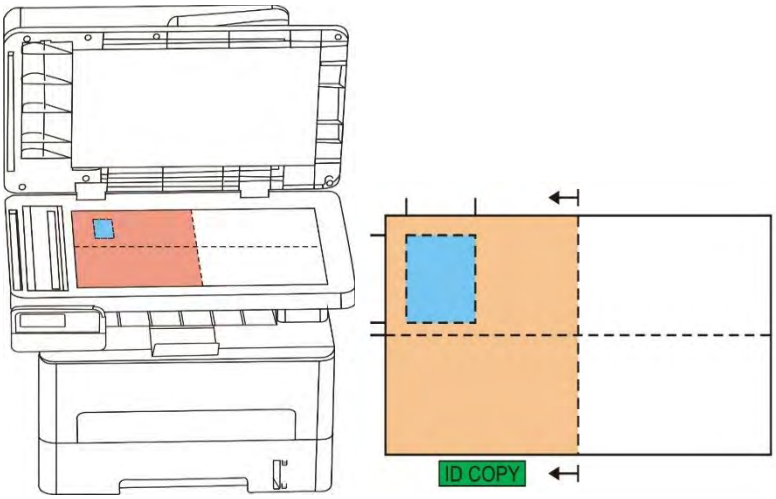

Note: • After setting, the arrangement mode can keep valid before startup; after startup, the arrangement mode will recover to default setting.

8.5.2. Intensity

For intensity setting, see 8.4.2.

8.5.3. Paper dimension

If arranged in modes of "Full Page Up and down", "Half-page Up and down" and "Half-page Left and right", the paper size supports "A4" and "Letter" only; if arranged in mode of "A5 Long Edge", the paper size supports "A5" only. Please follow instructions on panel to put the paper vertically for printing.

8.6. Receipt setting

For better copying effect of bills, you can enter the "Bill Copy Setting" menu to change relevant settings.

1. Press "Bill Copy" and then "Menu" on control panel to enter the "Menu Settings" interface.
2. Press "OK" to enter the "Bill Copy Setting" interface.
3. Press “direction key to select option to be set and press “OK key” to set option.

8.6.1. Intensity

For intensity setting, see 8.4.2.

8.6.2. Paper setting

The receipt copying supports A4, Letter, B5, A5, A6 and Executive paper dimension.

9. Scan

This printer provides two types of scan: "Push Scan", which means scanning through the printer's Control Panel operations; "Pull Scan" which means scanning through PC terminal scanning the application. Before scanning, please be sure a printer driver has been installed in the computer.

9.1. Pull Scan

You may scan with the scanning application in PC via USB, wired or wireless connection. Please be sure the printer has been properly connected before scanning.

9.1.1. GG IMAGE Scan Application

Operation Steps:

1. Double click on " GG IMAGE Scan Application" on the computer, the icon is shown as below:

2. The prompt window is shown as below:

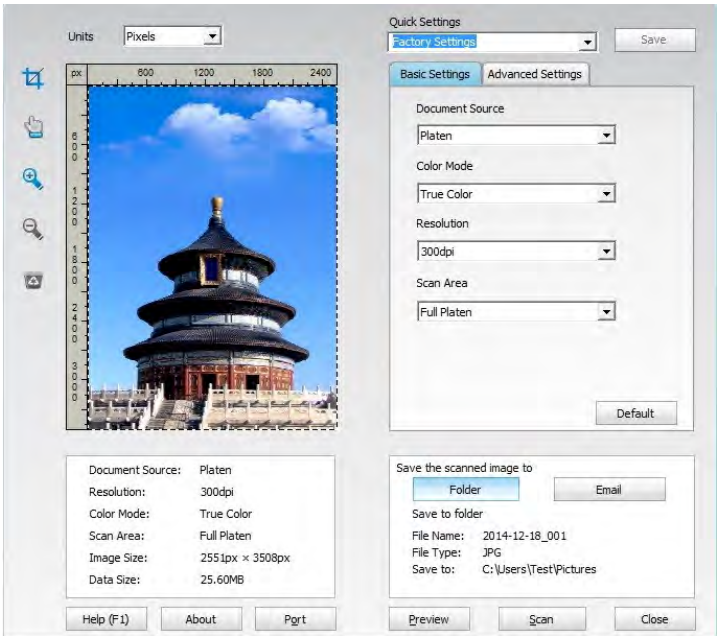

3. Set Scan in the right list. Click "Scan" on the bottom right corner and start scan.

Note:• GG IMAGE scan application software can scan pictures and support 5 formats of files: BMP, JPG, TIF, PDF, and PNG.

• You may click "Help (F1)" to open the help document of the scanning application to learn more scanning setting information.

This product complies with the TWAIN and Windows Image Application (WIA) standard. If using the application which supports TWAIN and WIA standard, users can use the scan function and directly scan the images to the open application. The handbook requires Office Software (Word and Excel) and Photoshop ,for example, to show the operation.

9.1.2. TWAIN Scan Driver

9.1.2.1. Office Software (Word and Excel)

Operation Steps:

1. Open the Office software (Word or Excel).
2. Keyboard shortcuts: Alt+I+P+S to open the application's window.

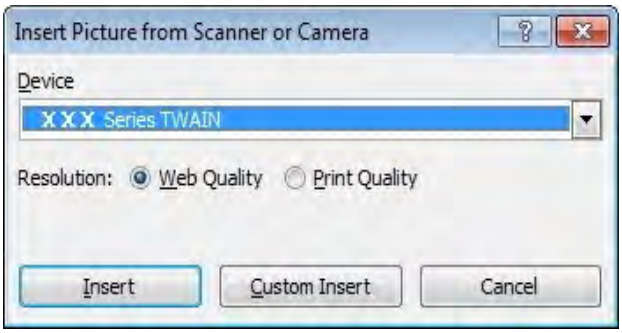

3. Click on "Device" option and select TWAIN Scan, click the "Custom Insert" button below.

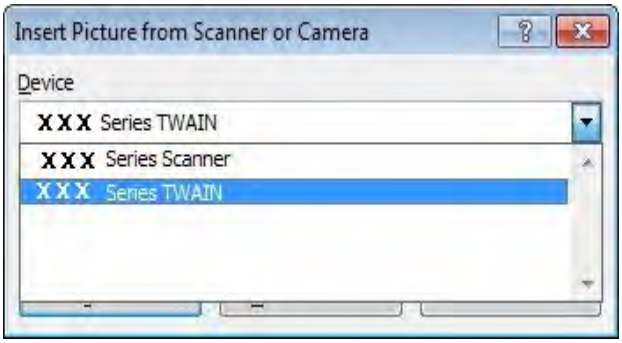

4. After the window pops up, set the scan information in the right list of "Basic Setting" and "Advanced Setting". Click on "Scan" and start scan.

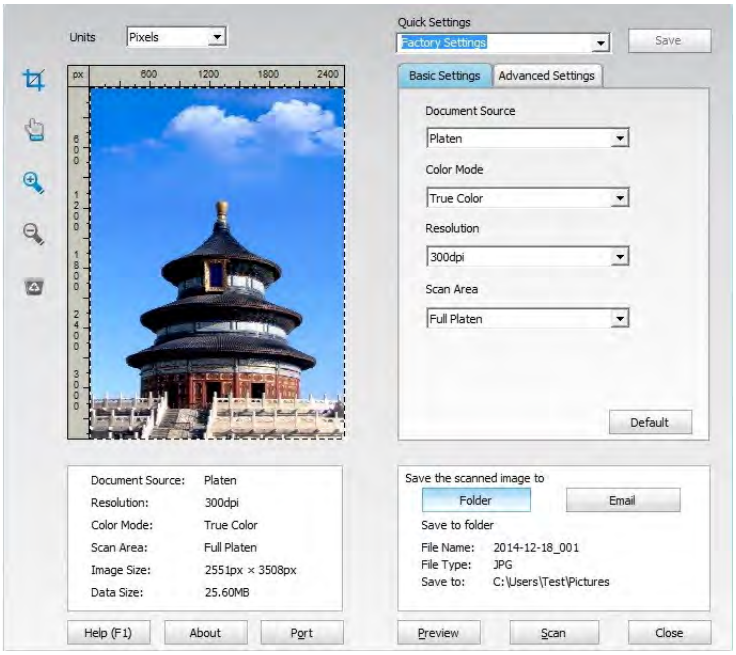

If you desire to change a scanning port, please click "Port" at the lower part of above picture to select a scanning port, as shown below:

9.1.2.2. Photoshop

Operation Steps:

1. Launch Photoshop, click on "File" – "Import" on the top left corner and select TWAIN Scan, as is shown below:

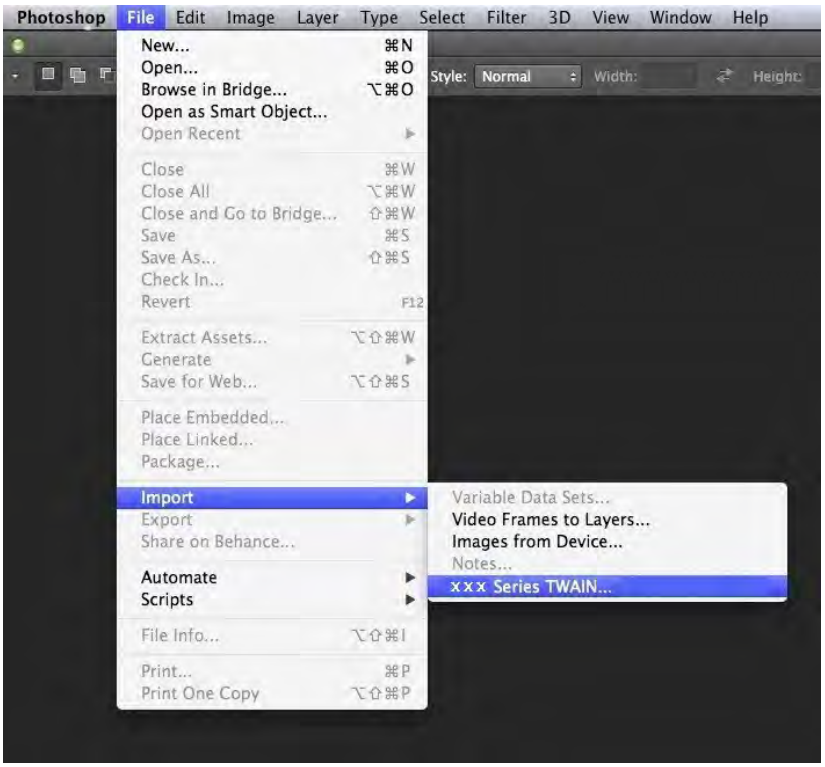

2. After the window pops up, please refer to Step 4 of 9.1.2.1 to see the specific operation steps.

9.1.3. WIA Scan Driver

9.1.3.1. WIA1.0 Scan (Windows XP / Windows Server 2003)

1. Office Software (Word and Excel)

Operation Steps:

1) Open the Office software (Word or Excel).

2) Keyboard shortcuts: Alt+I+P+S to open the application's window.

3) Click on "Device" and select WIA Scan,click the "Custom Insert" below.

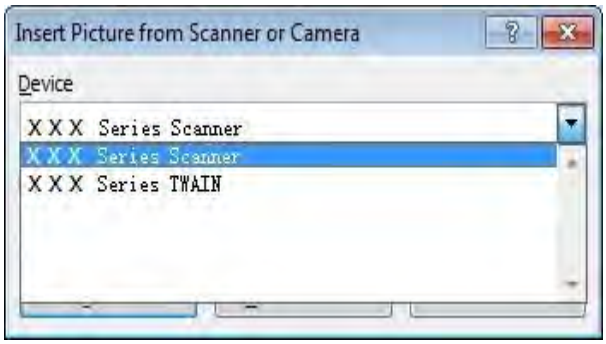

4) The prompt window as is shown below, set the scan information.

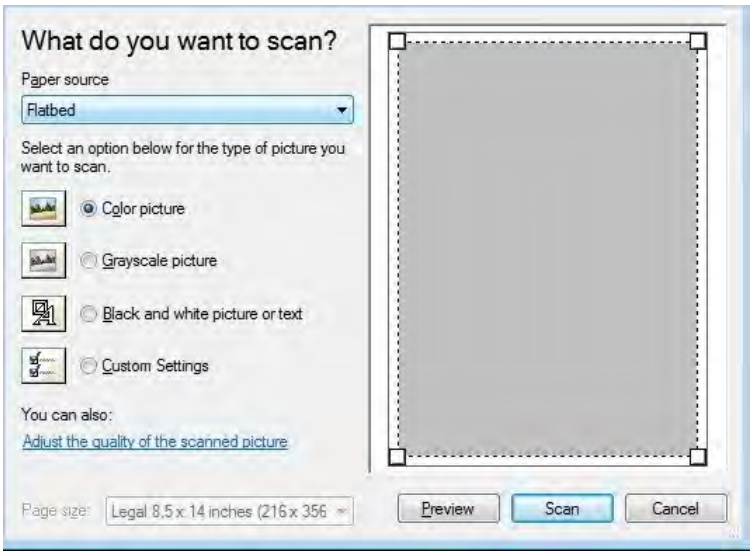

5) Click on "Adjust the Scanned Image Quality" on the bottom left corner of the above picture, the advanced properties interface will pop up, then users can set the scan; After finishing the settings, click on the "OK" button, then "Scan" button to start scan.

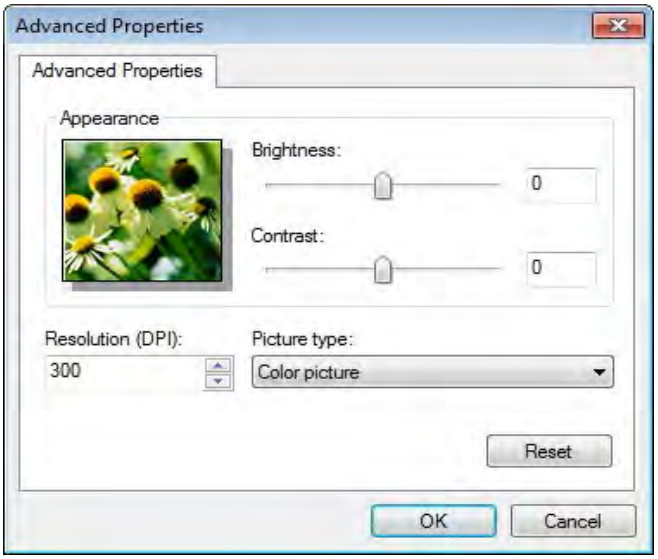

2. Photoshop

Operation Steps:

1) Launch Photoshop, click "File"- "Import" on the top left conrner and select WIA Scan, as is shown below:

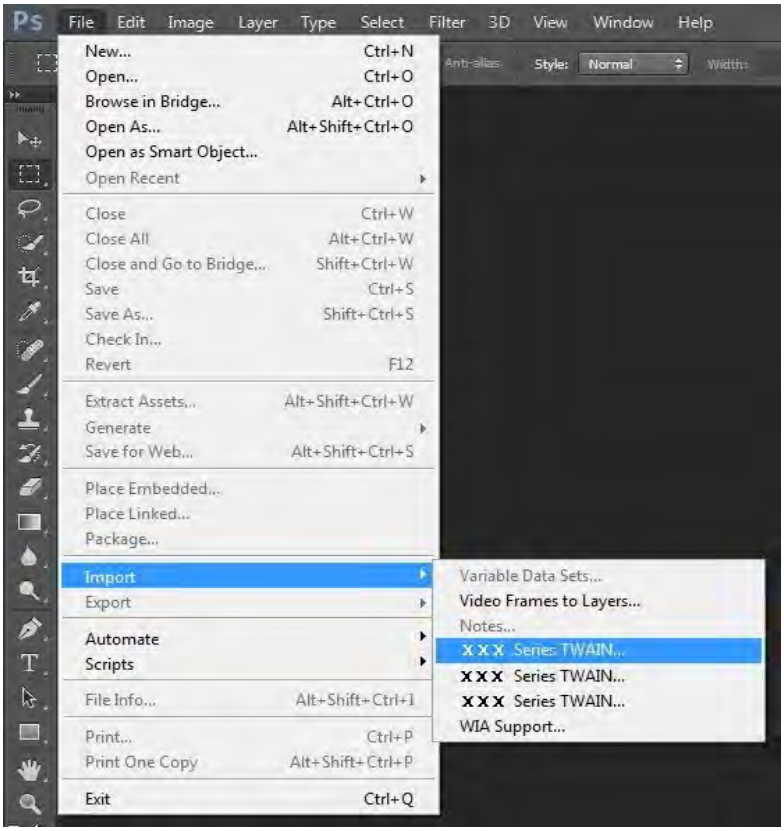

2) After the window pops up, please refer to Step 4 and Step 5 of 9.1.3.1 to see the specific operation steps.

9.1.3.2.WIA 2.0 Scan (Windows Vista / Windows Server 2008 and later versions)

Operation Steps:

1. Click on "Start"- "All Programs"- "Device and Printer" on the left bottom of the desktop.

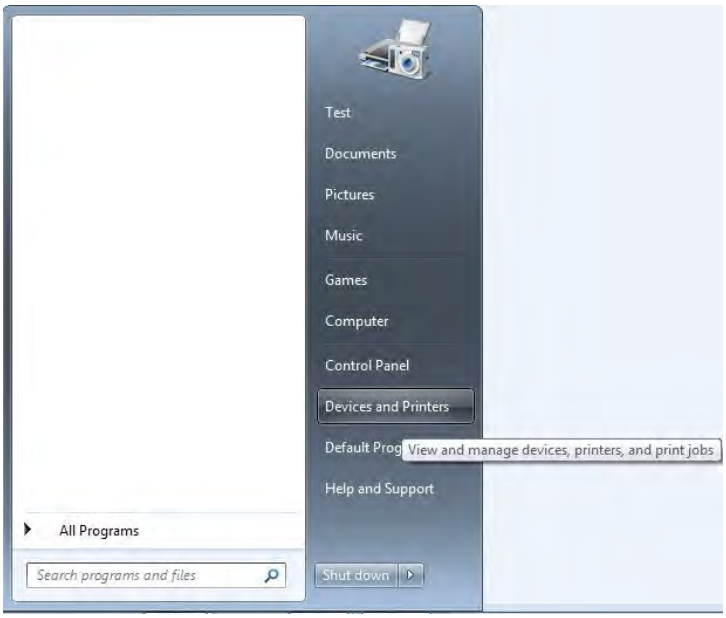

2. When the pop-up window appears, select the printer you want to use, and right click the mouse.

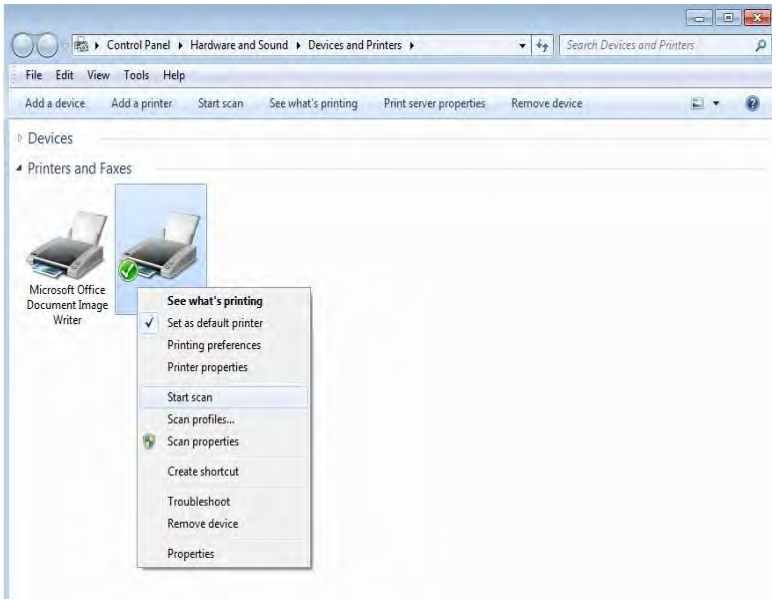

3. Click on "Start Scan" in the above option bar.

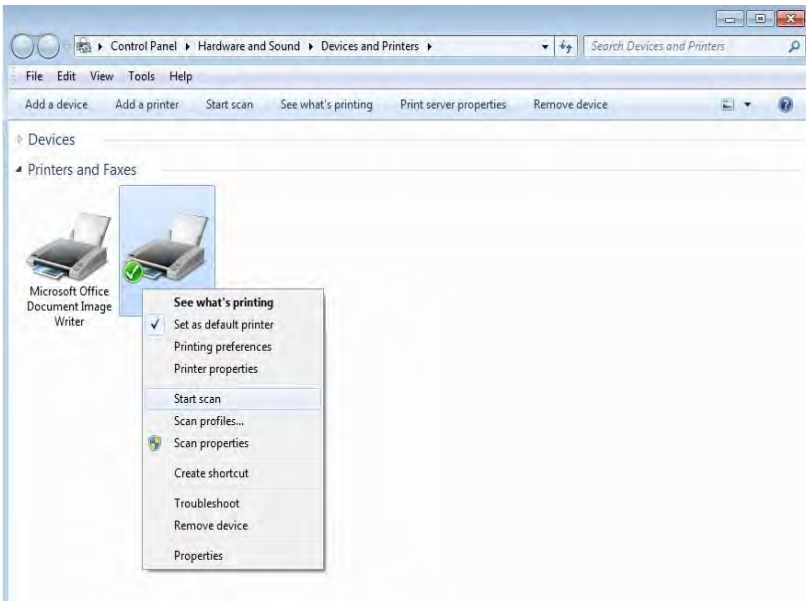

4. After the window pops up, set the scan and click "Scan" on the bottom right corner and start scan.

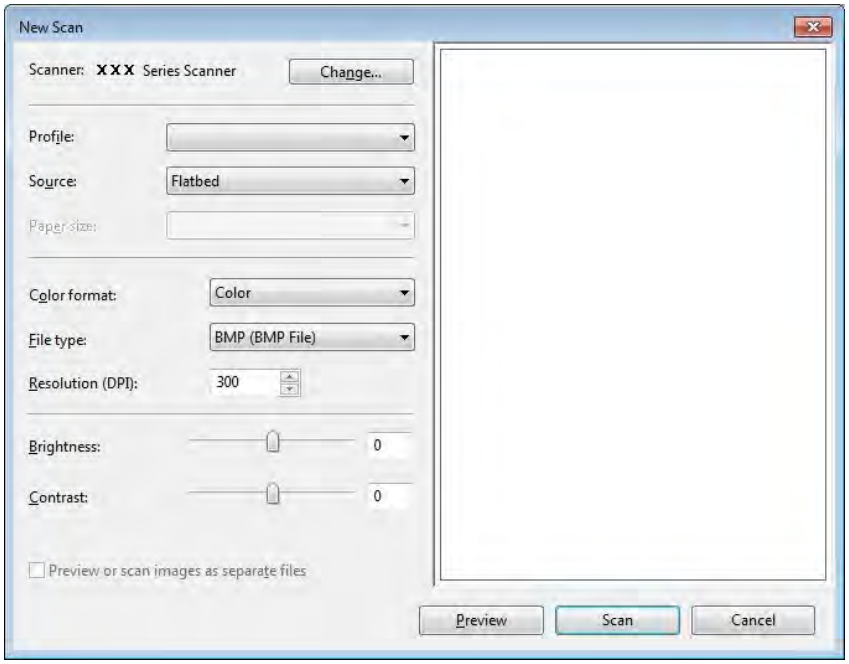

9.2. macOS System Scan

9.2.1. ICA Scan

9.2.1.1. Open ICA via "Print and Scan"

Operation Steps:

1. After installing the printer driver, click "System Preferences" icon on the bottom left corner of the computer desktop.

2. After the window pops up, click on "Print and Scan".

3. After the window pops up, click on "Scan".

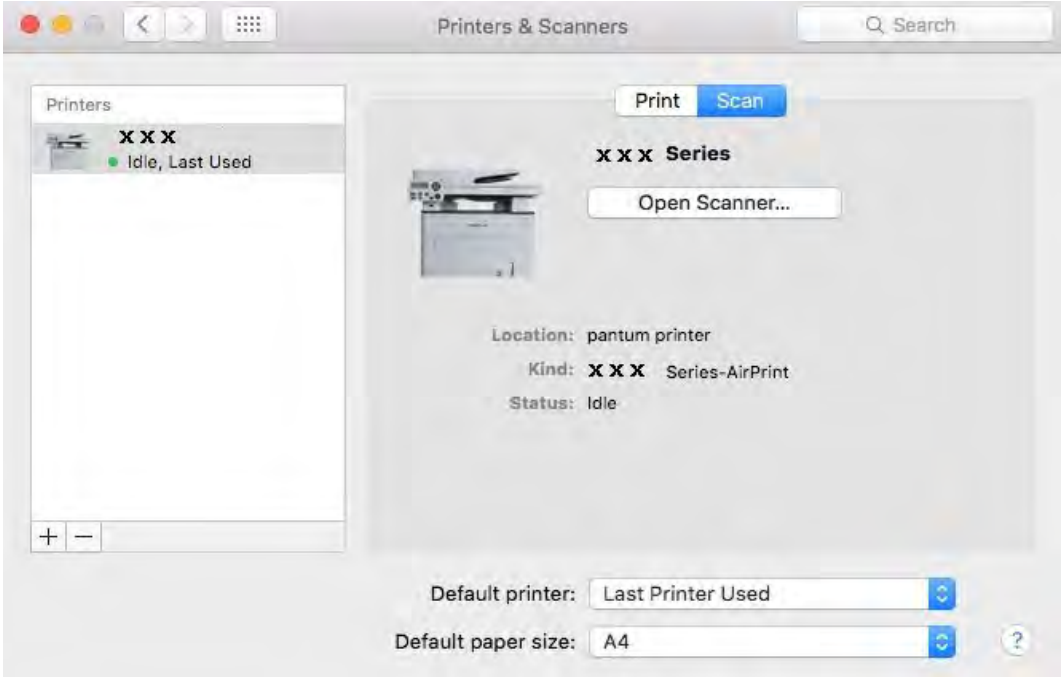

4. Click on "Open Scanner" and the scan window will pop up.

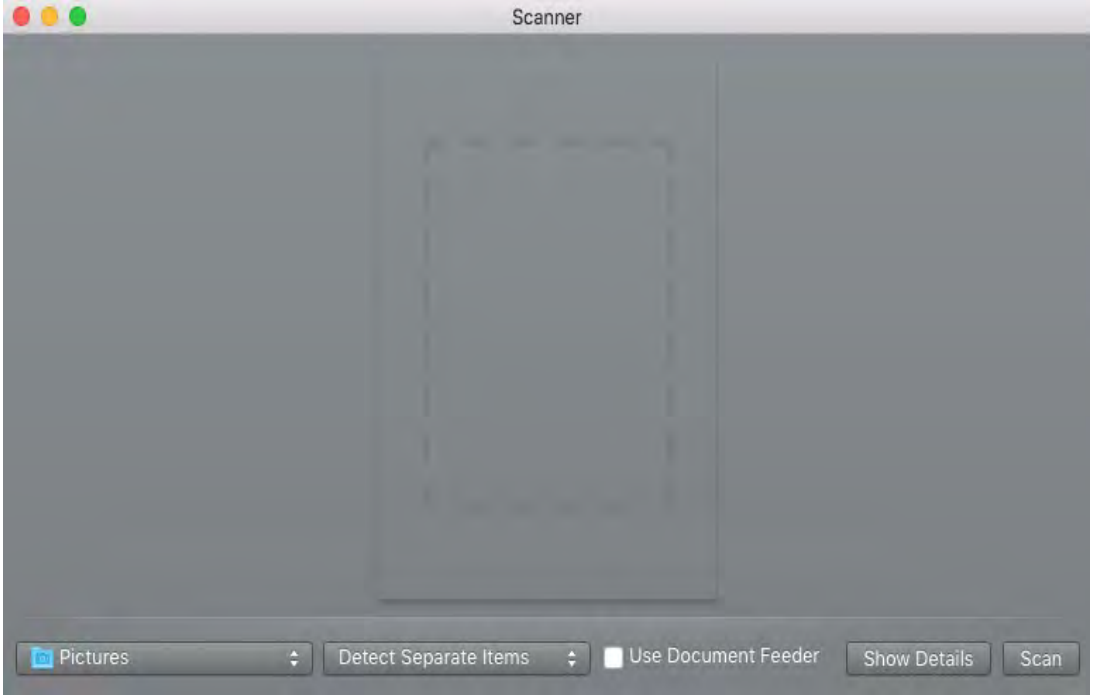

5. Click on "Show Details" on the bottom right corner to set the scan parameters.

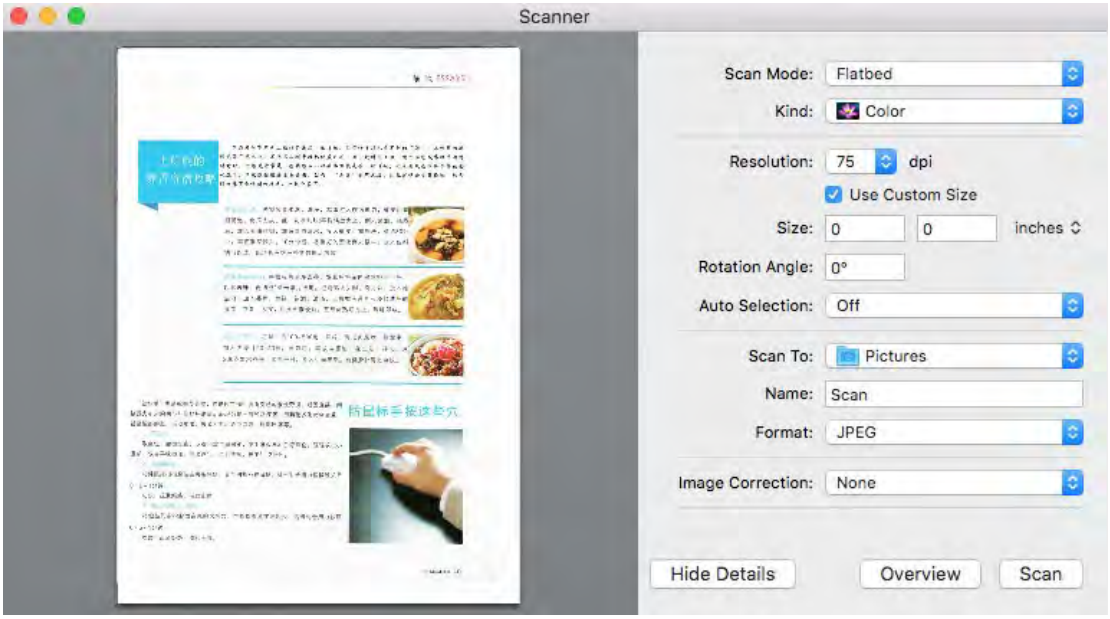

6. Click on "Scan" on the bottom right corner and start scan.

9.2.1.2. Call CIA through applications

Operation Steps:

1. Click on "Finder" icon on the bottom left corner of the computer desktop, or use keyboard shortcuts command+shift+C to open the window. Find "Image Capture" in "Applications" (or conduct keyboard shortcuts command+shift+A to directly switch to "Applications") and click to launch the application.

2. After selecting the printer in the left list, set the scan parameters in the right list. Click on "Scan" on the bottom right corner and start scan.

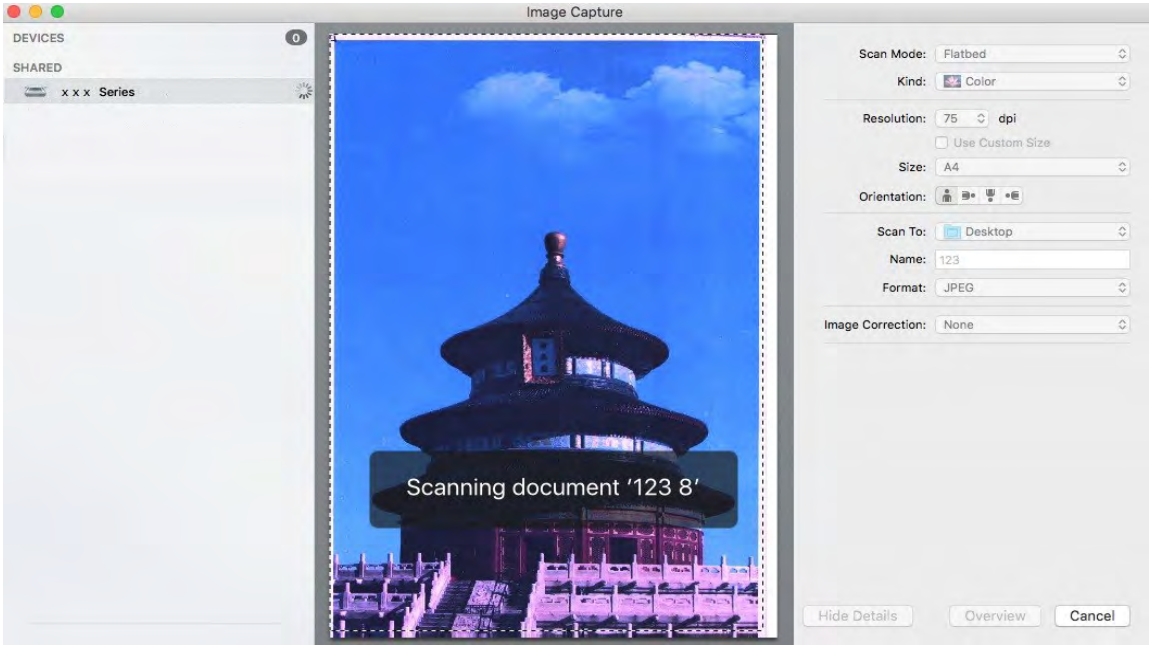

9.2.2. TWAIN Scan

Take Photoshop as an example.

Operation Steps:

1. Launch Photoshop, click on "File" – "Import" on the top left corner and select TWAIN Scan, as is shown below:

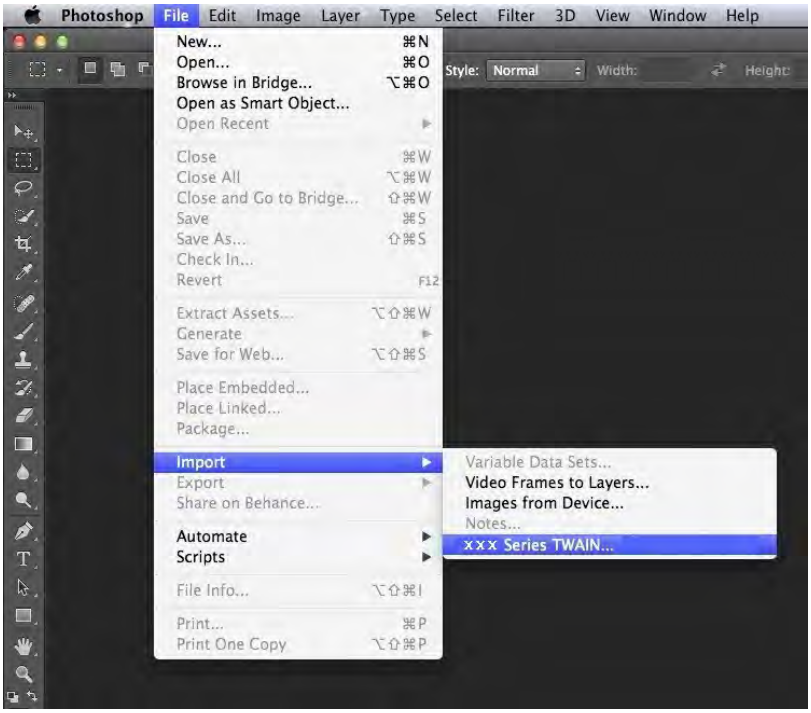

2. After the window pops up, please refer to Step 4 of 9.1.2.1 to see the specific operation steps.

9.3. Push Scan

This section is mainly to introduce how to scan files to PC, E-mail, FTP and USB with the printer's control panel.

Note: • The one-page file scanned to PC, E-mail or FTP could be saved in PDF, TIFF or JPEG; if scanned to USB, it could be saved in PDF and JPEG.

• Under merge scan mode, a file scanned to PC or USB will be saved in PDF be default; if scanned to E-mail or FTP, it will be saved in PDF, TIFF or JPEG.

9.3.1. Scan to PC

You may operate the printer's control panel to scan a file to PC. (Only support connection method of USB connection line.)

1. Be sure the printer and the computer are both switched on and connected with each other properly.

2. Put an original on the glass platen or into the ADF (please see Chapter 2.5 for how to put an original).

3. Press "Scan" and then "▲" or "▼" on control panel to select "One-page Scan" or "Merge Scan"; then, press OK.

4. Press "Menu" and then "OK" to enter the "Scan Setting" interface.

5. Press "▲" or "▼" to select "Scan To" options; then, press OK.

6. Press "▲" or "▼" to select "Scan to PC" and then press OK; press "Start" to begin scanning.

7. For merge scan, please put files to be scanned on the glass platen and then press "Start" to scan the next page (directly continuous scanning is available if scanning with the ADF).

9.3.2. Scan to E-mail

You may scan a black-white or color file as an appendix to the e-mail application, with specific operation steps as follow:

1. Be sure the printer and the computer are both switched on and connected with each other properly.

2. Please see Chapter 6.2.3.1 to configure the SMTP Client.

3. Please see Chapter 6.2.3.2 to configure the e-mail address book (for machine with the fax feature, alternatively, see Chapter 12.6).

4. Put an original on the glass platen or into the ADF (please see Chapter 2.5 for how to put an original).

5.Press "Scan" button on the control panel, and press "▲" or "▼" to select "Single Page Scan" or "Merge Scan", then press "OK" button.

6. Press "Menu" and then "OK" to enter the "Scan Setting" interface.

7. Press "▲" or "▼" to select "Scan To" options; then, press OK.

8. Press "▲" or "▼" to select "Scan to E-mail" and press "OK" button.

9. Press “▲” or “▼" to select "E-mail Address Book" or "Group Mail" and press "OK" button.

10. Press “▲” or “▼" to select address or group and then press "OK" button; press "Start" button to start scan.

11. For merge scan, please put files to be scanned on the glass platen and then press "Start" to scan the next page (directly continuous scanning is available if scanning with the ADF).

Please follow these instructions on the settings for group emails:

Set the group name for group e-mail sending by webpage, and set the members, i.e.the receivers, in the group of group email. After finishing scanning, firmware will send the scanned documents to the mail server. Then mail server sends the documents to every member of the group.

9.3.3. Scan to FTP

Be sure the user is in an Internet-connected environment in scanning files to FTP server. If you want to scan large files, you may need to input the server address, user name and password to log in the server, with specific operation steps as below:

1. Be sure the printer and the computer are both switched on and connected with each other properly.

2. Please see Chapter 6.2.3.3 to configure the FTP address book (for machine with the fax feature, alternatively, see Chapter 12.7).

3. Put an original on the glass platen or into the ADF (please see Chapter 2.5 for how to put an original).

4.Press "Scan" button on the control panel, and press “▲” or “▼" to select "Single Page Scan" or "Merge Scan", then press "OK" button.

5. Press "Menu" and then "OK" to enter the "Scan Setting" interface.

6. Press "▲" or "▼" to select "Scan To" options; then, press OK.

7. Press “▲” or “▼" to select "Scan to FTP" and press "OK" button.

8. Press “▲” or “▼" to select the server and press "OK" button; Press "Start" button to start scan.

9. For merge scan, please put files to be scanned on the glass platen and then press "Start" to scan the next page (directly continuous scanning is available if scanning with the ADF).

9.3.4. Scan to U disk

This printer supports scanning files to USB without a computer. Before operation, please make sure the USB has enough storage space. The specific operation steps are as follow:

1. Insert the USB into the printer's front USB interface.

2. Put an original on the glass platen or into the ADF (please see Chapter 2.5 for how to put an original).

3.Press "Scan" button on the control panel, and press "▲" or "▼" to select " Single Page Scan" or " Merge Scan", then press "OK" button.

4. Press "Menu" and then "OK" to enter the "Scan Setting" interface.

5. Press "▲" or "▼" to select "Scan To" options; then, press OK.

6. Press "▲" or "▼" to select "Scan to USB" and then press "OK"; press "Start" to begin scanning.

7. For merge scan, please put files to be scanned on the glass platen and then press "Start" to scan the next page (directly continuous scanning is available if scanning with the ADF).

The printer will create a folder named GG IMAGEScan in which all scanned files are saved in PDF or JPG.

Note:• USB formats supported: FAT and FAT32 for Windows system and MS-DOS (FAT) for macOS system.

9.4. Cancel Scan Job

During the scanning, two ways are available to cancel the job:

1. Press "Cancel" button on the control panel to cancel the job.

2. Click Cancel button on the scan progress bar interface of the computer to cancel the job.

10. Fax

10.1. Connect Devices

Note:• Some functions are not available depending on different printer models. If you have any questions, please contact the Customer Service.

• " LINE " port is used to connect fax with telephone line.

• " "port is used to connect external telephone.

Note:• It is recommended to use the traditional analog phone service (PSTN: Public Switched Telephone Network) in connecting telephone line. If a digital environment (for examples, DSL, PBX, ISDN or VoIP) used, please be sure to use a proper filter and configure digital settings correctly. For more information, please contact your digital service provider.

10.2. Fax Settings

You may follow the steps below to execute fax settings.

1. Press "Fax" and then "Menu" to enter the "Menu Setting" interface.

2. Press OK button to enter the Fax setting interface.

3. Choose the Fax option you want to set by pressing the page up and down keys.

4. Here can be a total of 16 settings, set the standard as follows:

No.	Options	Description
1	Resolution	You may select the faxing definition from options of “Standard, Fine, Super Fine and Image”. It defaults to “Standard”.
2	Original Size	You can select the desired size of the document to be Faxed. The available options are A4, Letter and Legal.
3	Luminosity	You can adjust the luminosity of Fax documents manually or automatically.
4	Fax Name	Input the fax name and save it.
5	Fax Number	Input the fax number and save it.
6	Group Sending	With the feature of multi-address sending, it supports inputting several numbers to be faxed one by one, with the ability of up to 20 fax numbers sent to at the same time.
7	Delay Sending	With the feature of delay in sending, you may set the fax number and delay time of sending (within 24 hours), making the fax sent upon the time set. 30 fax jobs at most supported now.
8	Forward the Received	After enabling "Forward to Fax", please set the number to be forwarded; upon receiving the fax, it will forward to the number set immediately; if enabling "Forward and Print" at the same time, the printer will automatically print a copy of fax job for saving after receiving the fax.
9	Send Settings	You can use the options in Send Settings to set the parameters for sending Fax.
10	Receive Settings	You can use the options in Receive Settings to set the parameters for receiving Fax.
11	Compatibility	If Fax is sent or received abnormally due to disturbance on telephone line, try to switch to VOIP compatibility mode.

12	Country / Region	To adapt to different telephone lines in different countries, settings on different countries or regions are needed.
13	Fax Report	You can use the options in Fax Report to print the Fax report as you need.
14	Active Job	Query for the list of all Faxes for Delay sending and you can press the Cancel button to delete a Delay sending job.
15	Communication record	Inquire the latest 30 times of Fax sending/ receiving.
16	Contacts	You can edit the contacts, group numbers, and print the contacts as well as the list of group numbers from Contacts.

10.3. Fax Functions

10.3.1. Send Fax

10.3.1.1. Auto fax sending

1. Put an original on the glass platen or into the ADF (please see Chapter 2.5 for how to put an original).
2. Press the Fax button and use the number buttons to enter the Fax number.

3. Press the Start button to start scanning the document.
4. If the original is put on the glass platen, the printer will give a prompt of "Scan the Next Page" after scanning one page. If the next page exists, please remove the original scanned and put the next page on the glass platen; then, press "Start". After all pages have been scanned, please press "OK".

5) After all scanning complete, activate the fax to send.

Note:• In order to prevent damage to this product, do not use a manuscript with correction tape, correction fluid, paper clips or staples on it. In addition, do not load photos, small manuscripts or brittle manuscripts into the automatic document feeder.

10.3.1.2. Manual fax sending

1. Put an original on the glass platen or into the ADF (please see Chapter 2.5 for how to put an original).
2. Press the Fax button and use the number buttons to enter the Fax number.
3. Press "Speaker" or pick up the receiver to input the fax number.

4. After hearing the fax prompt, press "Start" to confirm sending.

• If the party called receives the call, you may have a voice communication; after confirming the fax sending and hearing the fax prompt, press "Start" to begin sending.

10.3.2. Receive Fax

You have two ways to receive Fax, and the default for the printer is Fax mode.

Fax mode: determine each call from the calling party as a fax. When arriving the ring count set, it gives fax receiving signals and receives the fax automatically.

Telephone mode: determine each call from the calling party as a call. With this mode, you may need to pick up the receiver manually and then press “Start” on control panel to receive the fax.

10.3.2.1. Auto receiving under fax mode

In receiving the fax, the machine answers the call with the set ring count and then receive the fax automatically. The ring count defaults to 4 times.

To change the ring count, please see Chapter 10.2 and Chapter 15.

To adjust the ring volume, please see Chapter 12.1.8.

10.3.2.2. Manual receiving under telephone mode

Under telephone mode, there are 3 ways to receive a fax when there is a fax call:

1. Press “Start” on control panel and then the machine begins to receive.

2. Pick up the receiver or press “Speaker” and then “Start” on control panel; the machine begins to receive.

3. Use remote receiving method (only for external telephone), and after picking up the receiver, press "*90" on telephone panel and then the machine begins to receive.

Note:• The default for remote code is "*90". You can modify it by the path “Menu"——"Fax Settings"——"
Receive Settings"——“Remote Code”——“Turn On”——edit.
• If the toner in cartridge runs low, the printing job of fax received may not be completed perfectly. Please
replace with a new toner cartridge or find out the " Low in Toner, Continue to Print" option among the fax
receiving setting options and then set it as "On" for continuous printing.

10.3.3. Set the interference and the telephone line compatibility of VoIP system

If the fax is sent or received abnormally due to interference to telephone line, please improve the fax receiving and sending with the following methods.

1. Switch to VOIP Compatible mode with panel setting.

Please follow steps below to set :

1) After the machine is ready, press "Fax“ and then ”Menu“ to enter the ”Menu Settings" interface.

2) Press "OK" to enter the "Fax Settings" interface; next, press "OK".

3) Press "▲" or "▼" to find out the "Compatibility" option and then press "OK".

4) Press "▲" or "▼" to select "VoIP". Then, the VoIP Compatible mode is switched to.

2. Try to resend the fax in off-peak hours.

3. Consult your VoIP provider on if the network setting on fax transmission could be optimized.

10.3.4. Other Fax Functions

For settings on fax, please see Chapter 10.2 and Chapter 15.

1. Group Sending

This printer supports sending one original to several fax numbers, with the ability of up to 20 fax numbers sent to at the same time.

2. Delay Sending

You can enable Delay sending of Fax through the Control Panel. When this process is complete, the printer will scan the document to the memory, and get back to Ready state.

3. Active Job

You may check or delete the delay sending jobs stored currently with the "Active Job" menu.

4. Receive and forward

You can forward the Fax you receive. When you receive a Fax job, it will be stored in memory at first. Then the printer dials the Fax number you have specified and send the Fax. If a fax fails to be forwarded due to busy line or line failure, This printer will print a copy of fax contents to be forwarded for backup. (If the Redial feature is set, it will print after redialing) .

Please enable "Forward and Print" in enabling the forward function if there is a need of printing the fax contents to be forwarded.

5. Automatic Redial

If the number you have dialed is busy or is not responding when you send a Fax, the machine will automatically redial the number. You can set the redial attempts and interval.

6. Auto Shrink

When the paper size of the received Fax does not match the size specified in the printer, the received Fax will be shrinked according to the user-defined paper size to match the paper size in the printer.

If you disable the Auto Shrink option, the Fax will be printed at full size across multiple pages. Auto Shrink is turned on by default.

Note:
- Make sure that the default paper size setting is consistent with the size of the medium loaded in the paper tray.
- Receive in memory: in case of paper out or paper jam, This printer supports storing all faxes under receiving into its memory automatically; after handling the paper out or paper jam, it will print all of them automatically.

7. Speed dial

You may edit the quick-dial and group-dial numbers in the address book for quickly dialing in sending a fax.

1) Speed Dial Number

In the Fax interface, press the Contacts button to enter the speed dial interface, enter the speed dial number, and the system will automatically search for it. If the speed dial number exists, the corresponding information is displayed, then press the Start button to begin the Faxing; If the speed dial number does not exist, an error message is displayed; You can store 200 speed dial numbers at the maximum.

2) Group Dial Number

In a fax interface, press "Menu" key, then press "OK" button, enter the fax parameter setting interface, select Contacts - Group calls, enter the group call interface ,select the group dial to enter the group dial interface, select one of the groups, and press the Start button to begin group

Faxing. You can set a maximum of 10 groups for Group Dial with up to 99 numbers in each group.

10.4. PC-Fax

PC-Fax function allows you to send a document from your computer as a Fax.PC-Fax supports Windows system only. In this chapter, a Word file is taken as the example to show you how to operate.

10.4.1. Sending Fax with PC-Fax

1. Open the document to be faxed.
2. Click "File" and then "Print".
3. Select a printer named after the end of Fax and then click "Printer Properties"; next, set "Paper" and "Quality" of PC-Fax sending on the "Fax Settings" popup.

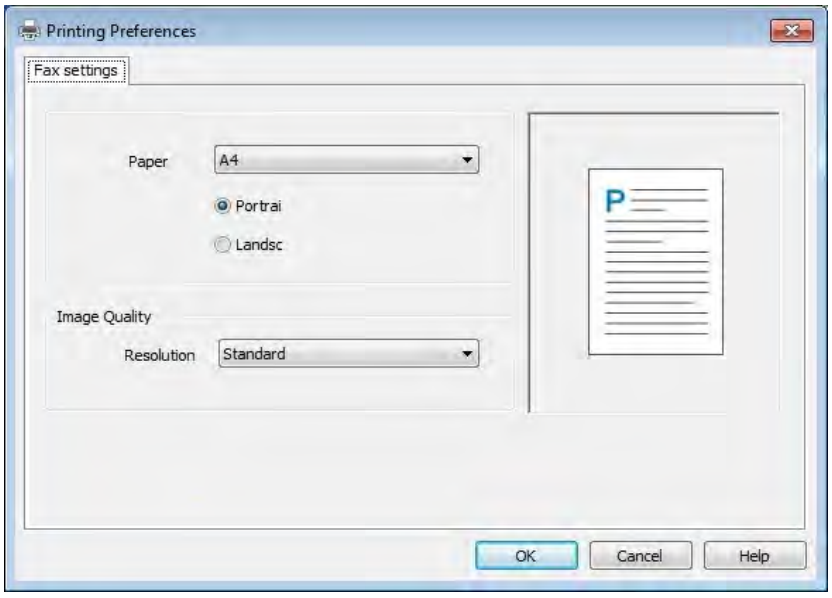

4. Click "Print" to present the "Send Fax" interface.

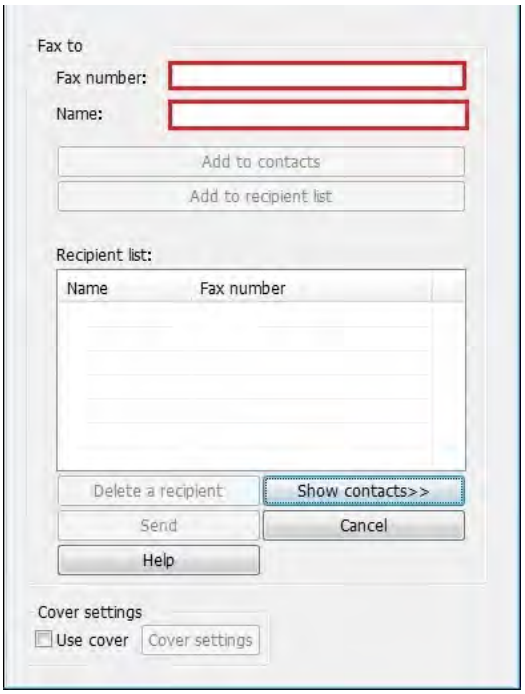

5. Enter the Name and Fax Number, then click Add to recipient list; If you want to send the Fax to multiple addresses, you can continue to enter their Name and Fax Number, then click Add to recipient list.

6. Click Send to start sending the Fax.

11. Mobile Print (applicable to Wi-Fi models)

11.1. AirPrint mobile print

Only printers that support AirPrint function can realize AirPrint printing. Please check if there is AirPrint mark on the packaging of the printer, in order to identify if the printer supports AirPrint function.

11.1.1. Operating systems supported by AirPrint mobile print

Applicable to iOS 7.0 or higher versions.

11.1.2. Preliminary preparations

1. A printer that has wireless network function.
2.iOS device mobile printing.

11.1.3. How to use AirPrint mobile printing

The printing steps may varied by applications, taking PDF as an example for explanation.

1. Turn on printer power.
2. Connect the iOS mobile device with wireless network of the printer (Please refer to Chapter 5 for how to connect).
3. Open the files you need to print in the format of PDF on the iOS device.
4. Click .
5. Tap "print".
6. Please make sure the GG IMAGE printer is selected.

If you select other printers (or no printer), please click printer option and then select your GG IMAGE printer.

7. Set printing parameters such as number of copies to print.
8. Tap "print".

Note: • If printing fails, please inspect if the iOS device is connected to the wireless network where the printer is connected to.

• If the iOS device cannot detect any printer, please inspect if power of the printer is turned on and if the printer is turned on.

12. General Settings

This Chapter mainly introduces some general settings.

Note:• The panel appearance may be a little different due to difference in type or function. All diagrams are only for reference.

12.1. System Settings

12.1.1. Ink saving setting

You can select the save toner mode which can reduce toner consumption and reduce printing cost. When save toner mode is “on”, the printed color will be lighter. Save toner mode is “off” by default.

1. Press "Menu" to enter the menu setting interface.
2. Press "▲" or "▼" to select "System Setting" and then press "OK".

3. Press "▲" or "▼" to select "Toner save set" and then press "OK" to enable/disable the Ink Saving mode.

12.1.2. Language Setting

"Language Setting" is used to select the language to be displayed on the control panel.

1. Press "Menu" to enter the menu setting interface.
2. Press "▲" or "▼" to select "System Setting" and then press "OK".
3. Press "▲" or "▼" to select "Language set" and then press "OK" to do language setting.

12.1.3. Restore Factory Settings

“Restore factory settings” is used to recover the default settings of printer. The printer will restart itself automatically after recovering factory settings.

1. Press "Menu" to enter the menu setting interface.
2. Press "▲" or "▼" to select "System Setting" and then press "OK".
3. Press direction key "▲" or "▼" to select the "Restore set" option and press "OK".

Note:• Factory settings of network printer can be recovered via embedded Web server (please refer to Chapter 6.2.4) .

12.1.4. Sleep Time Setting

Sleep mode can reduce the energy consumption of printer effectively, and “Sleep time setting” can be made in the idle time before the device enters sleep mode.

1. Press "Menu" to enter the menu setting interface.
2. Press "▲" or "▼" to select "System Setting" and then press "OK".
3. Press direction key “▲” or “▼” to select “Sleep time set” option, and press “OK” key to set the corresponding sleep time.

Note:• In sleep mode, the printer can be woken up by pressing any key or sending printing work.
• Sleep time of network printer can be set with the embedded Web server (Please refer to Chapter 6.2.3.4).

12.1.5. Mute printing

Set mute mode to realize low speed printing with low noise. When mute mode is “on”, printing will be in a low speed. This mode is “off” by default.

1. Press "Menu" to enter the menu setting interface.
2. Press "▲" or "▼" to select "System Setting" and then press "OK".
3. Press direction key “▲” or “▼” and select “Mute printing” option and press “OK” key to turn on/off this mode.

12.1.6. Print a Page for Clean & Fix

"Print a Page for Clean & Fix"function can clean the toner, paper powder and other inpurities, so as to realize better printing effect.The printer will start up Print a Page for Clean & Fix function automatically after the printer has printed a certain number of pages. You can also launch Print a Page for Clean & Fix function manually by setting up the printer panel. The steps are as follows:

1. Press "Menu" to enter the Menu Settings interface.
2. Press "OK" to select the "1.System Setting" option.
3. Press “▲”or“▼”and select "Clean & Fix" option, then press "OK" to start cleaning and fixing of the fuser unit.

12.1.7. Auto shut-off setting

“Auto shut-off setting” to set off condition and off delay of printer.

1. Press "Menu" to enter the Menu Settings interface.
2. Press "OK" to select the "System Setting" option.
3. Press direction key “▲” or “▼” to select options of “Auto off set”, press “OK” to set off condition and off delay.

Note: Set auto off condition:

- Shutdown under no-port state (default configuration. : no port is connected, Wi-Fi function deactivated, printer is under standby or sleep mode.
- Shutdown under idle state: the printer is under standby or sleep mode.
- If auto off condition is satisfied, printer will be off at the preset time.
- After printer is off, power consumption is 0.5W or lower.
- Individual countries (or regions) do not support auto off setting.

12.2. Network Settings

You can check or set network status via network setting.

1. Press "Menu" to enter the menu setting interface.
2. Press direction key “▲” or “▼” and select “ Network Set” option.
3. Press “OK” key to set “Network set”, “wireless network setting” and “Wi-Fi Direct”.

12.3. Network Information

You can check the network status through Network Information.

1. Press "Menu" to enter the menu setting interface.
2. Press direction key “▲” or “▼” and select “Network info” option and press “OK” key to view “wired network information”, “wireless network information” and “Wi-Fi Direct information”.

12.4. Print information report

You can print information report by operating control panel. These pages can help you to learn about product information, and diagnose and solve product failures.

1. Press "Menu" to enter the menu setting interface.
2. Press "▲" or "▼" to select "Info.report".

3. Press “OK” key to enter information report print. You can print product report according to needs.

Product reports that could be printed include Demo page, information page, menu structure page, network configuration, e-mail address, group e-mail, FTP address and Wi-Fi hotspot.

Note: • The product report above is the most complete version, and may be different from the product report of model that you actually use.

12.5. Residual amount of toner

You may check the current residual amount of toner in cartridge with the printer’s control panel.

1. Press "Menu" to enter the menu setting interface.
2. Press "▲" or "▼" to select "TonerRemainder".

3. Press "OK" to enter and check the residual amount.

12.6. Configure the e-mail address book

(Applicable to machine with the fax feature)

1. Press “Scan” and then “Menu” on control panel to enter the “Menu Setting” interface.
2. Press "OK" to enter the "Scan setting" interface.
3. Press "▲" or "▼" to select “Email Add.” and then press “OK”.
4. Press "▲" or "▼" to select “Add. book edit” and then press “OK” to execute operations of Create, Edit/Check, Delete and Add to Group.
5. Press "▲" or "▼" to select “Group mail ed.” and then press “OK” to execute operations of Create, Edit/Check and Delete.

Note:• the address book members cannot be added to the group before creating a group e-mail.
• You will not receive the e-mail without proper settings on your e-mail box. For specific setting steps, please consult your network administrator.

12.7. Configure the FTP address book

(Applicable to machine with the fax feature)

1. Press “Scan” and then “Menu” on control panel to enter the “Menu Setting” interface.
2. Press "OK" to enter the "Scan setting" interface.
3. Press "▲" or "▼" to select “FTP Add. book” and then press “OK” to execute operations of Create, Edit/Check and Delete.

Note: • Before configuring the FTP address book, you may need to consult your network administrator for the server IP address, port number and FTP name.

12.8. Online upgrade

This printer supports firmware upgrade with its control panel without a computer.

1. Switch on the printer and then connect it to network.
2. Press "Menu" to enter the Menu Settings interface.
3. Press "▲" or "▼" to select “Online upgrade” and then press “OK”.
4. Please follow instructions to operate. After completion, please reboot the printer.

Note: • If the firmware fails to be downloaded, please reboot the printer and then operate again.

13. Routine Maintenance

Note:• Printer appearance may differ because of various models and functions, so the schematic diagram is only for your reference.

13.1. Cleaning the Printer

Note:• Please use mild detergents.

• Some parts of the printer are still in high temperature within a short time after use. To prevent burns, please don't directly touch places labled with high temperature warning in contact with internal components after opening the printer's front or rear cover.

1. Use a soft cloth to wipe the outside of the printer clean.

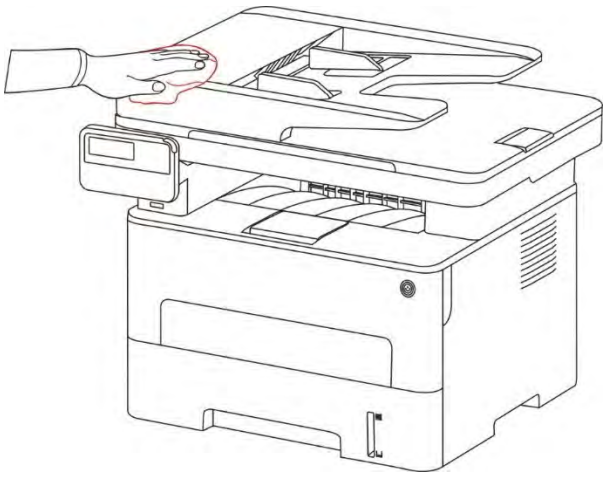

2. Open the scanner cover and then wipe the glass platen gently with a soft cloth.

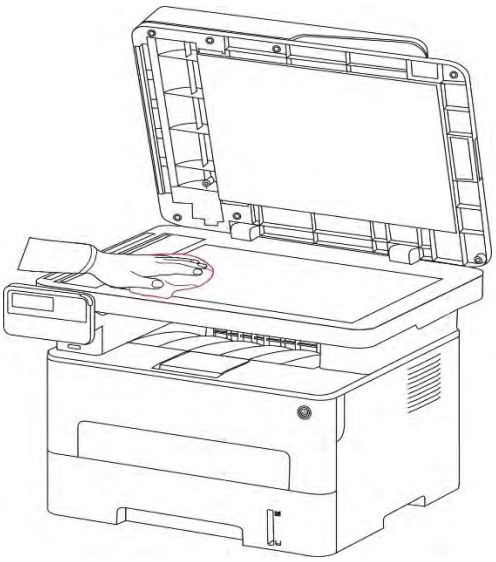

3. Open the front cover and take the laser toner cartridge out along the track.

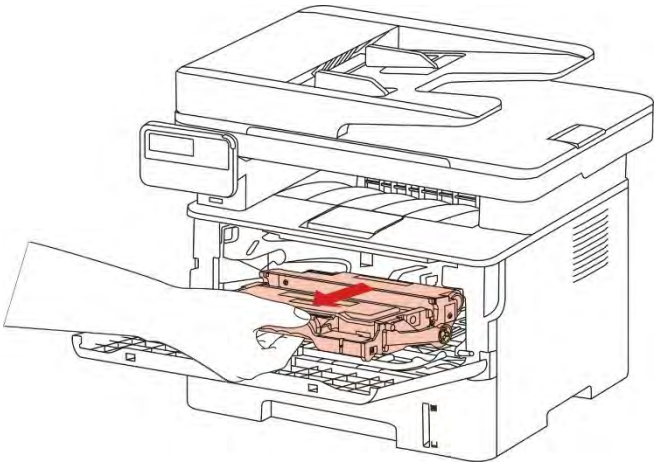

Note:• When removing the toner cartridge, put the toner cartridge in a protective bag or wrap it with thick paper to avoid direct light damaging the toner cartridge.

4. Clean the inside of the printer by gently wiping the shaded area, as shown in picture, with adry and lint-free cloth.

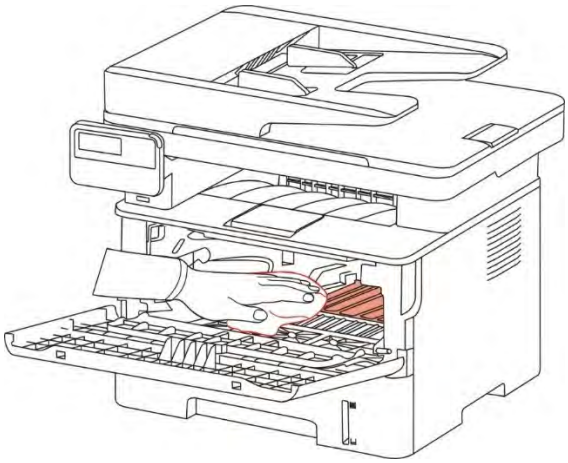

5. Wipe the LSU lens of printer gently with dry lint cloth.

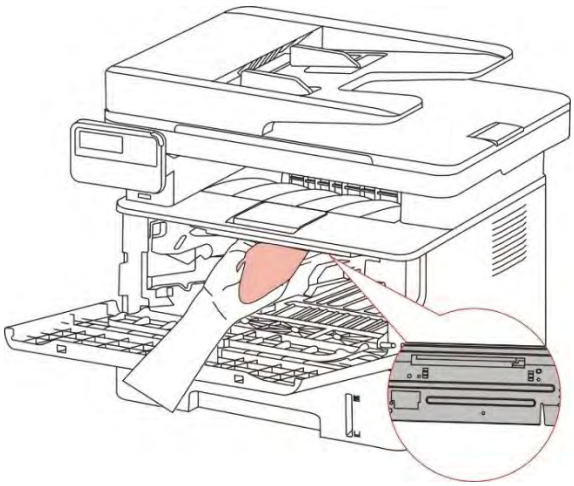

6. Open the auto feed tray and wipe the pickup roller gently with dry lint cloth.

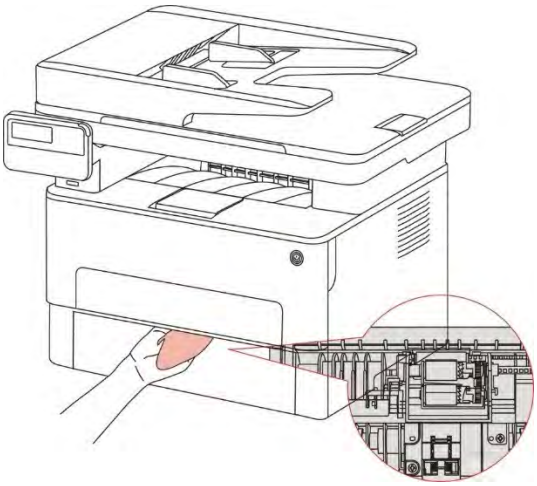

Note:• the machine with the ADF should be regularly cleaned, removing dirt on the top cover of the ADF. Please wipe the place as shown in figure with a soft cloth.

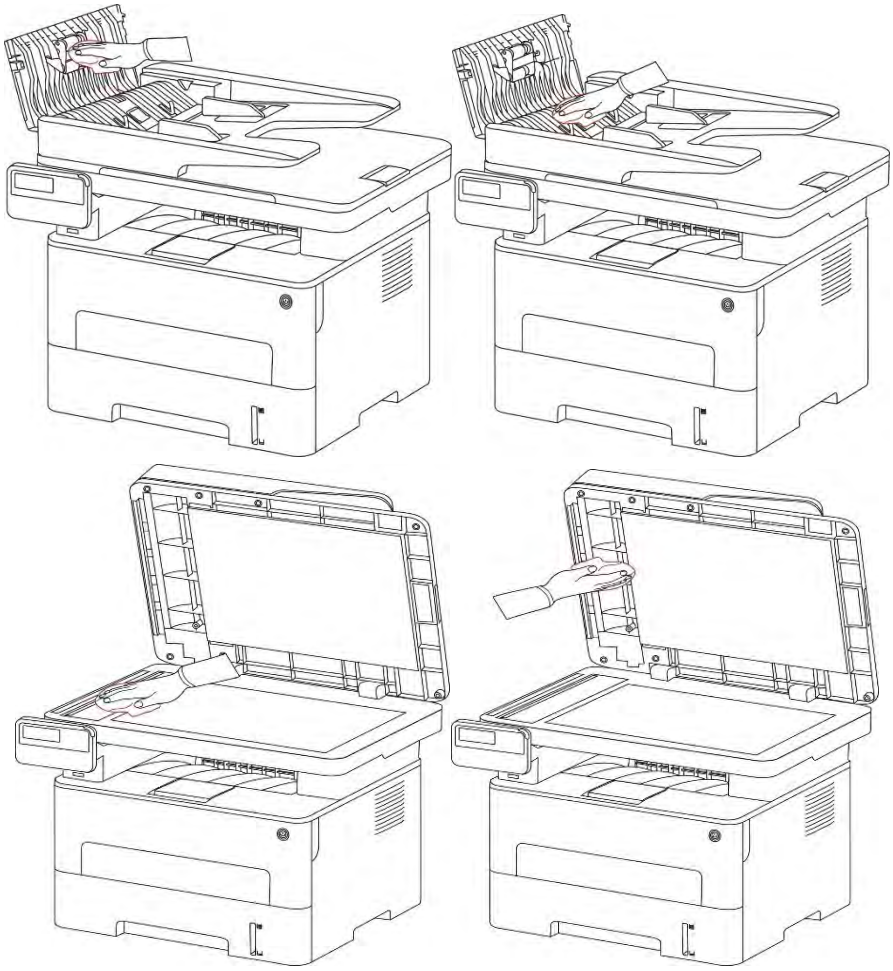

13.2. Toner cartridge and drum component maintenance

13.2.1. About toner cartridge and drum component component

1.Cartridge, use and maintenance of the drum assembly.

Please use the original toner cartridge for better printing quality.

Please pay attention to the following items while using the toner cartridge:

• Please keep the toner cartridge in a dry and dark place.

• Do not refill the toner cartridge without permission; otherwise, the damages caused will not be included in the scope of warranty of the printer.

• Please place the toner cartridge in cool and dry places.

• Please do not place the toner cartridge near ignition sources, as the toner inside it is inflammable and may cause fire.

• Please pay attention to toner leakage while it is taking out or disassembled. In case of toner leakage, skin contact with toner or spattering into eyes or mouth, please wash it with clear water immediately, or see a doctor if feeling unwell.

• When placing the cartridge, please stay away from children may contact area.

2. Service life of toner cartridge

• The service life of toner cartridge is depending on the toner quantity needed by printing.

• When a prompt that "The Toner Cartridge life Expired" appears on the display, it indicates its service life expires. So please replace it.

3. Service life of drum component

• When a prompt that "The Drum Unit life Expired" appears on the display, it indicates its service life expires. So please replace it.

13.2.2. Replace toner cartridge and drum component

Note: Please pay attention to the following matters before replacing toner cartridge:

• Since there may be toner on the surface of toner cartridge, please pay attention while taking it out to avoid spattering.

• Please place the toner cartridge taken out on paper to avoid large-scale spattering of toner.

• When installing, do not touch the surface of the toner cartridge, so as to avoid scratching it.

Toner cartridge replacement steps:

1. Power off the printer.

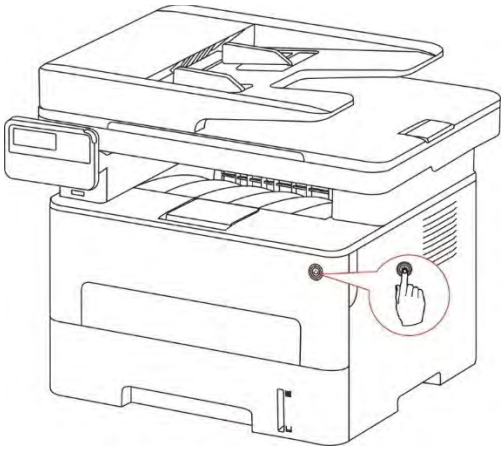

2. Open the front cover and then remove the laser toner cartridge along the guide rail.

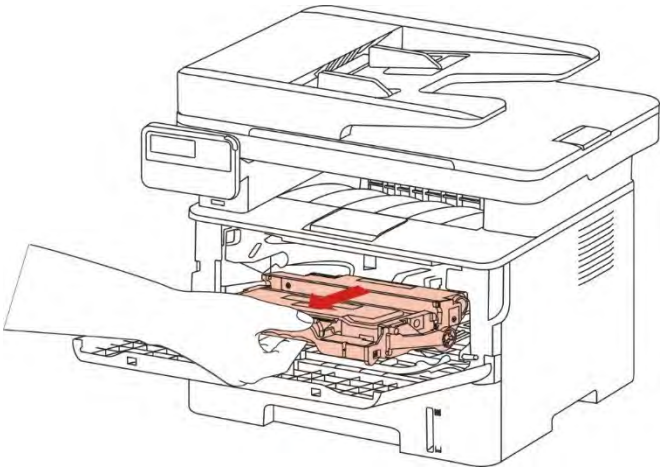

3. Press the blue button on the left side of drum component with left hand and lift the toner cartridge handle with right hand at the same time to take the toner cartridge out.

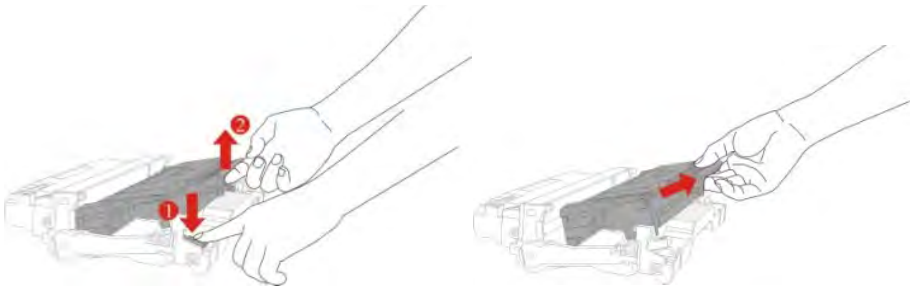

4. Open the package of the new toner cartridge and hold the toner cartridge handle to shake it left and right for 5 – 6 times, so that the toner inside can be uniformly dispersed.

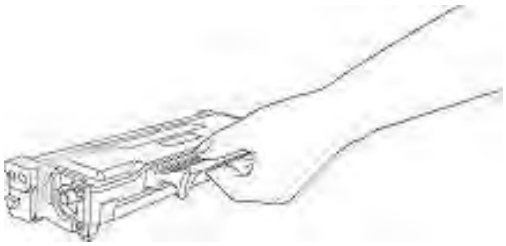

5. Pull the seal out and take the toner protection cover out.

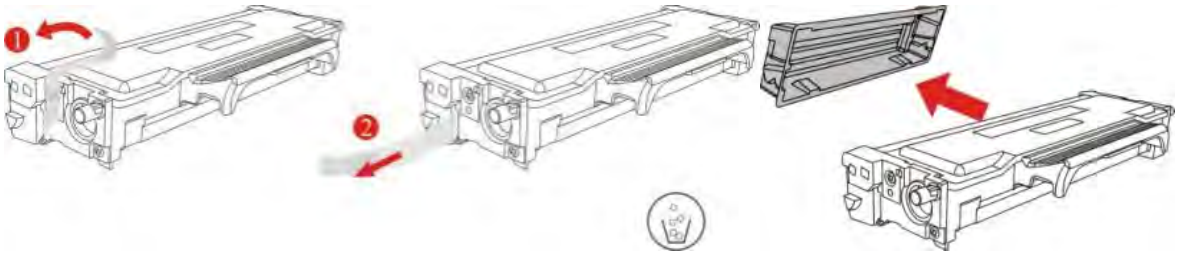

6. Install the drum component along the inner track to finish installing toner cartridge.

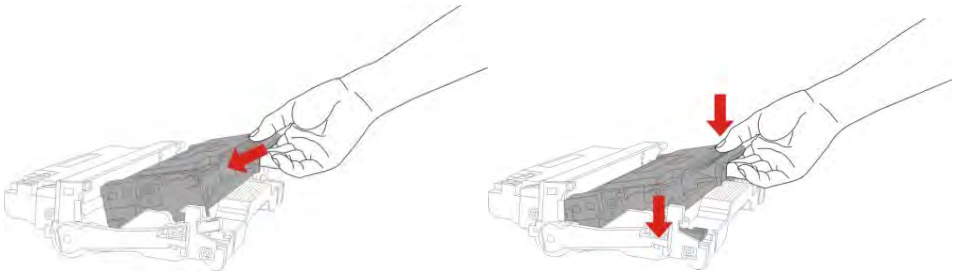

7. Take the drum component with toner cartridge installed and install it inside the printer along the inner track of printer to finish installing.

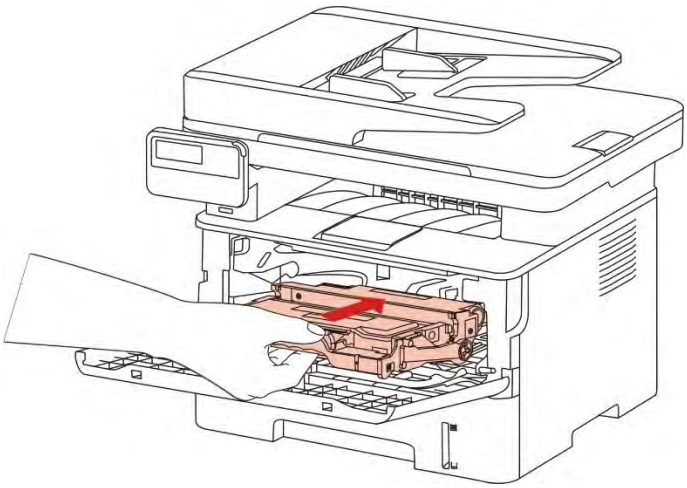

8. Close the front cover.

Replace the drum assembly steps are as follows:

1. Power off the printer.

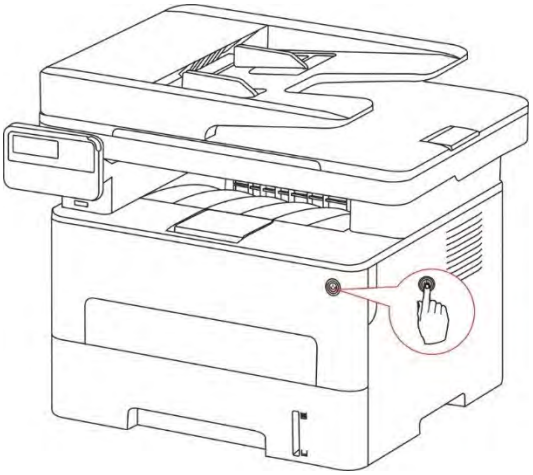

2. Open the front cover and take the laser toner cartridge out along the track.

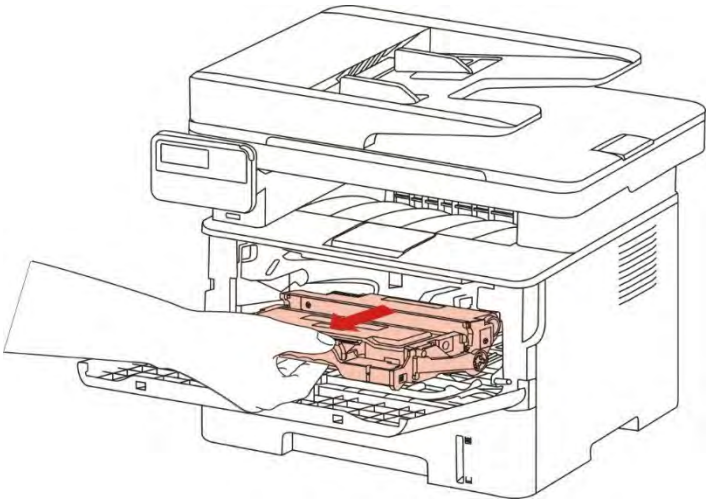

3. Press the blue button on the left side of drum component with left hand and lift the toner cartridge handle with right hand at the same time to take the toner cartridge out.

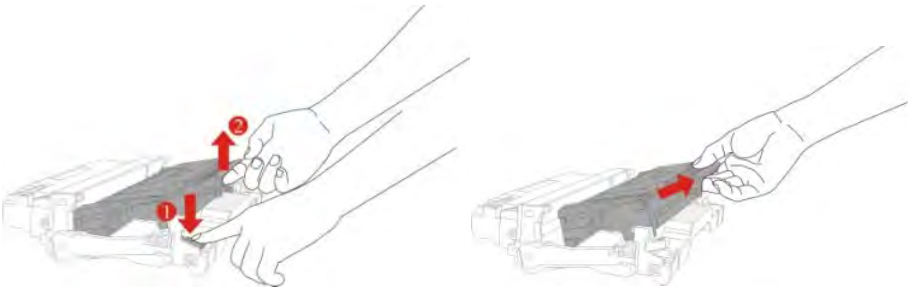

4. Open the package of new drum component, take the protection device of drum component, and put the drum component on a horizontal table.

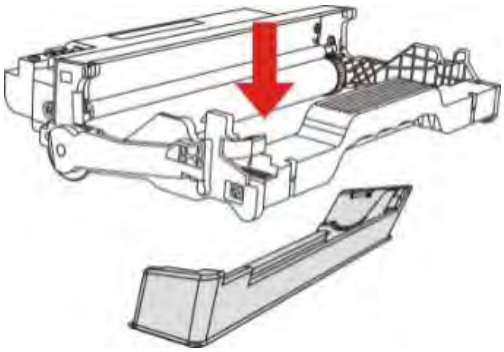

5. Install the drum component along the inner track to finish installing toner cartridge.

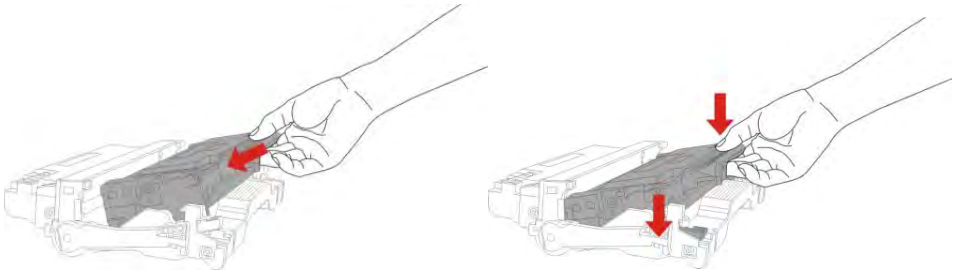

6. Take the drum component with toner cartridge installed and install it inside the printer along the inner track of printer to finish installing.

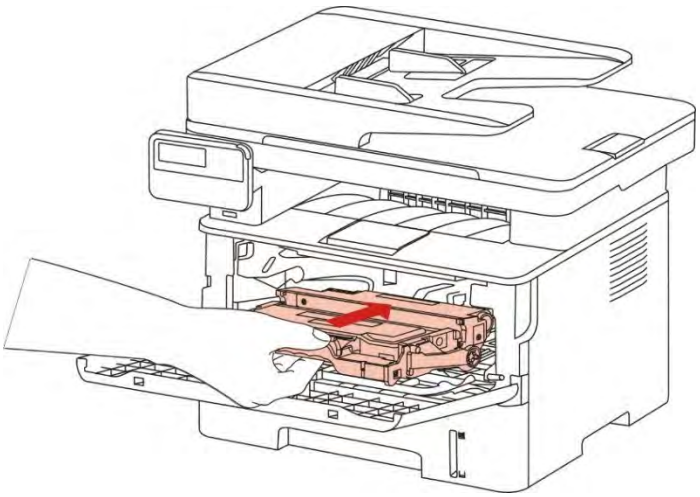

7. Close the front cover.

14. Troubleshooting

Please read this section carefully. It may help you to solve common problems encountered during the printing process. If the problems persist, please contact GG IMAGE Aftersales Service Centre.

Prior to handling common problems, first check that:

• The power cord is connected correctly and the printer is powered on.

• All of the protective parts are removed.

• The toner cartridge is installed correctly.

• The paper is correctly loaded into the tray.

• The interface cable between the printer and the computer is connected correctly.

• The correct printer driver has been selected and installed properly.

• The computer port is properly configured and is connected to the correct printer port.

14.1. Cleaning Jammed Paper

14.1.1. Middle jam

Note:• When removing the paper jam, please don't touch immediately places labled with high temperature warning in contact with internal components after opening the printer's front or rear cover, to prevent burns.

1. Pull paper tray out.

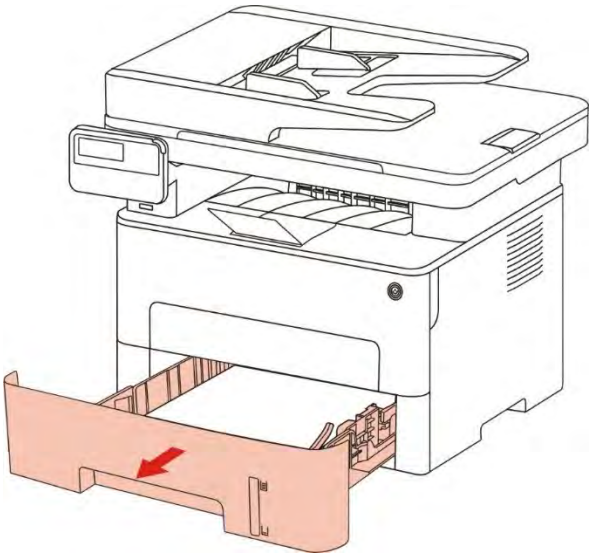

2. Gently pull the jammed paper out.

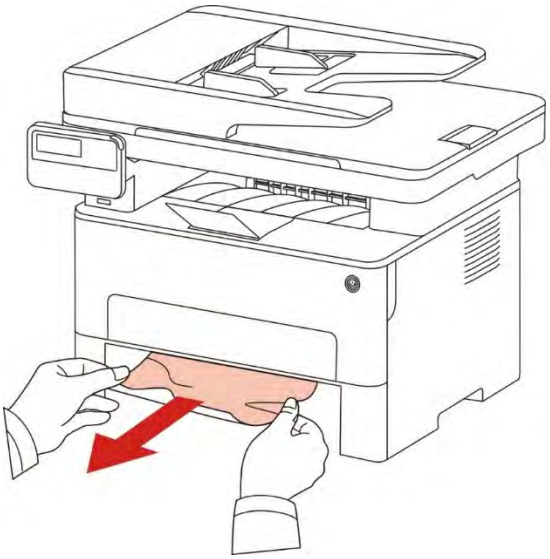

3. Install paper tray.

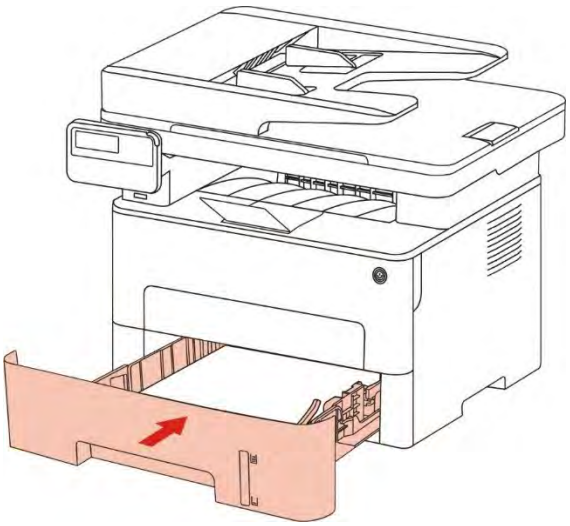

4. Open the front cover.

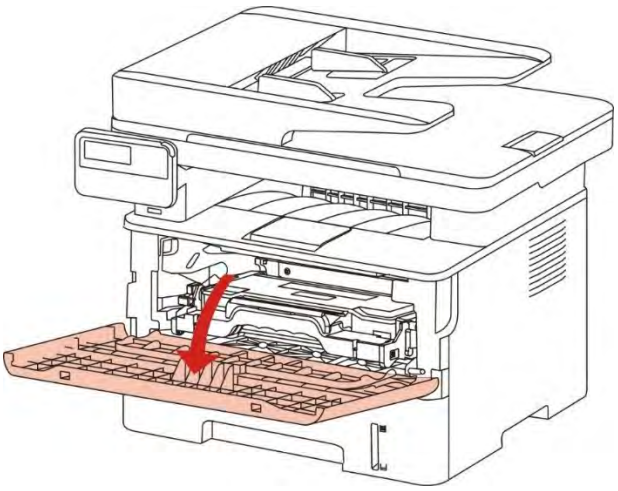

5. Take the laser toner cartridge out along the track. (For the purpose of preventing printing quality from affecting by the exposure of photosensitive drum, please put the laser toner cartridge inside the protection bag or warp it with thick paper).

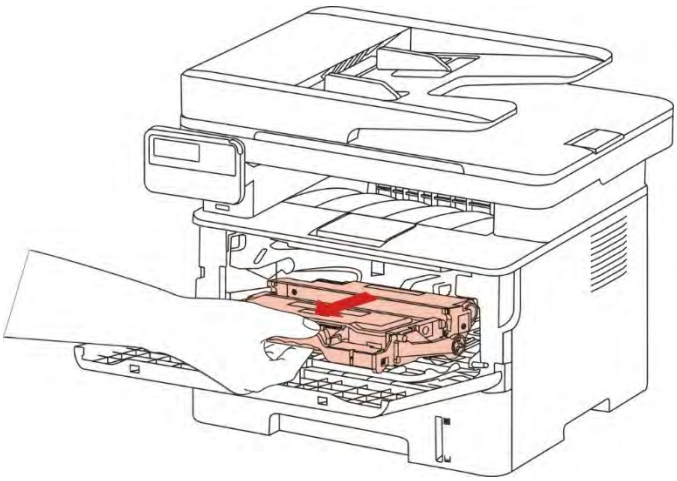

6. Gently pull the jammed paper out.

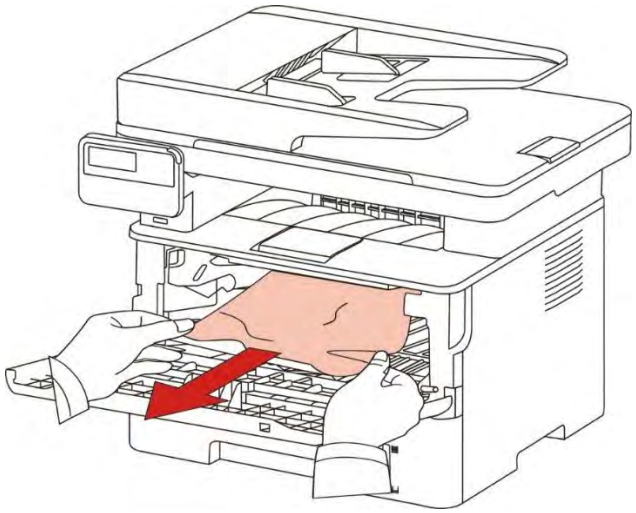

7. After taking out papers jammed, install the laser toner cartridge again and close the front cover, then the printer will recover printing.

14.1.2. Paper Jam in the Fuser Unit

Note:When papers jammed in fuser unit are taken out, please pay attention and do not touch the shaded area shown below in order to avoid burns.

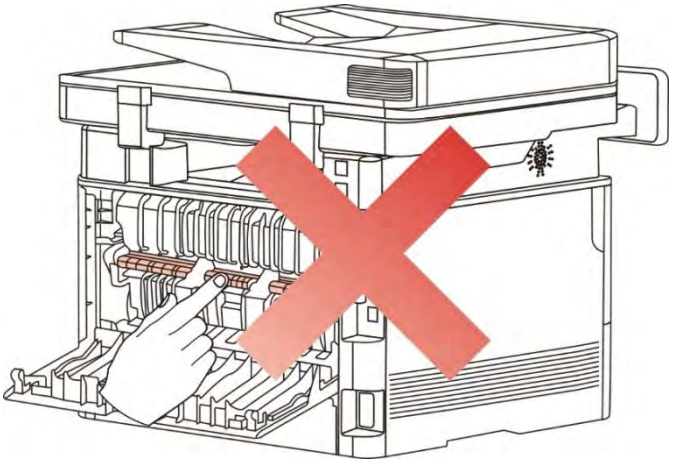

1. Open the front cover and then remove the laser toner cartridge along the guide rail.

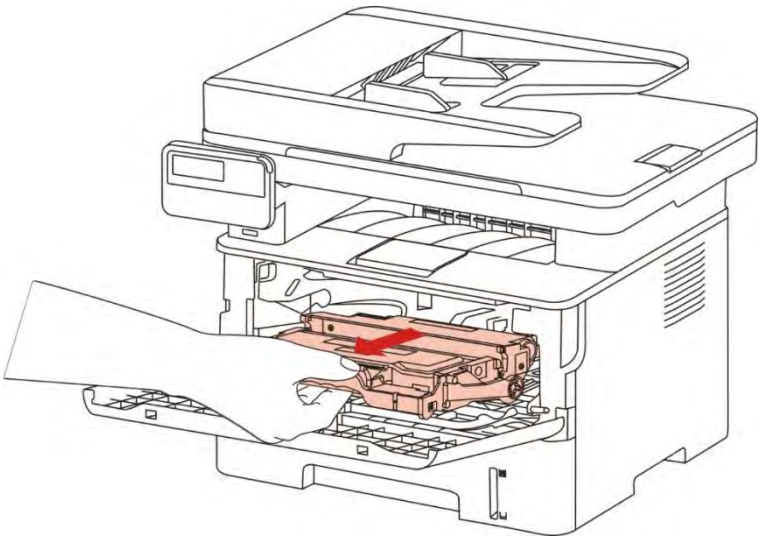

2. Open the rear cover.

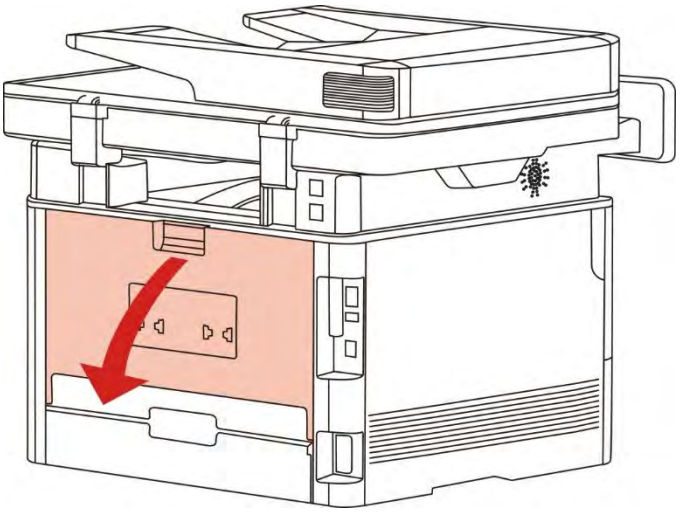

3. Open the fuser door using the handles on both sides.

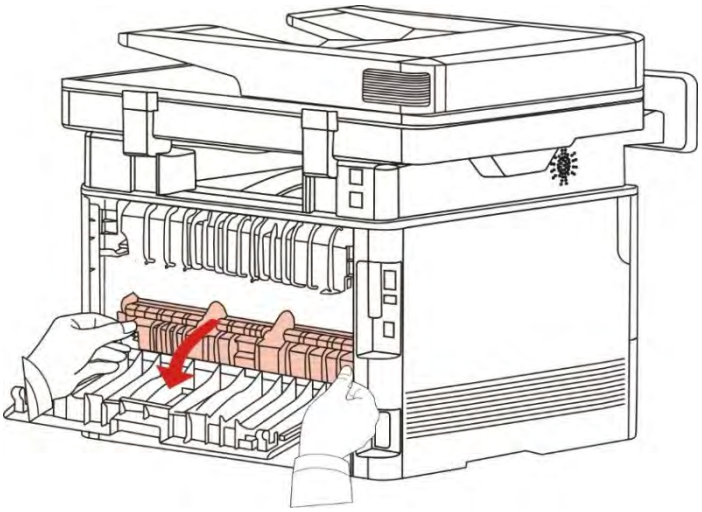

4. Gently pull the jammed paper out.

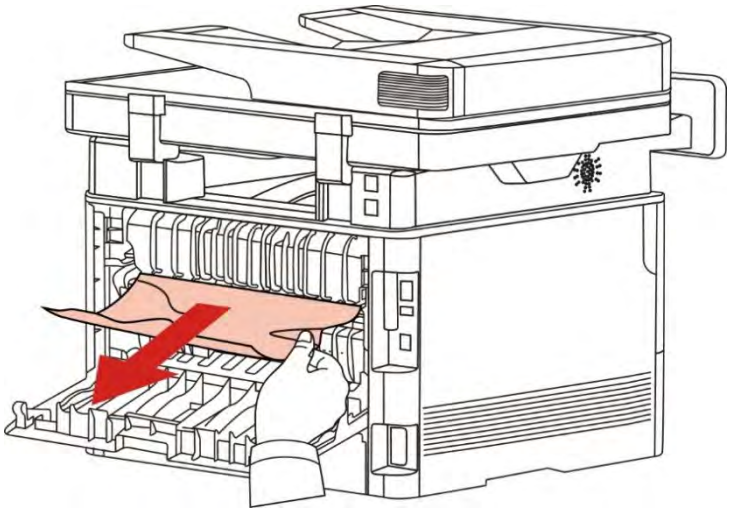

5. Close the back cover after removing the paper jammed.

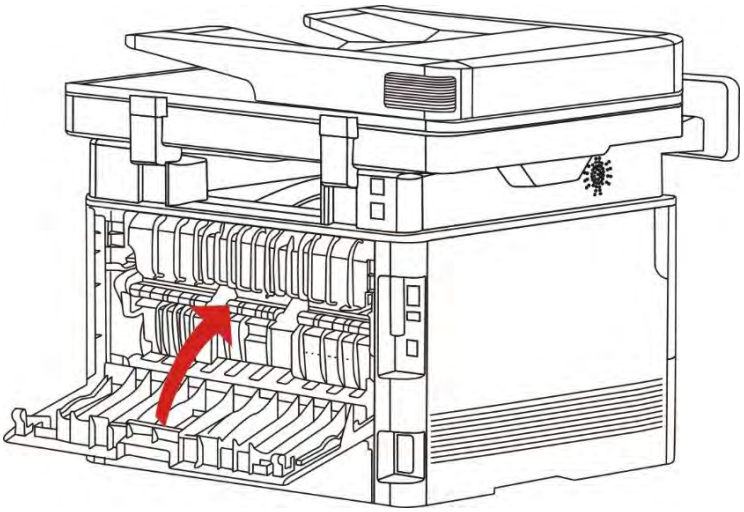

6. Install a new toner cartridge and then close the front cover; then, the printer will recover printing automatically.

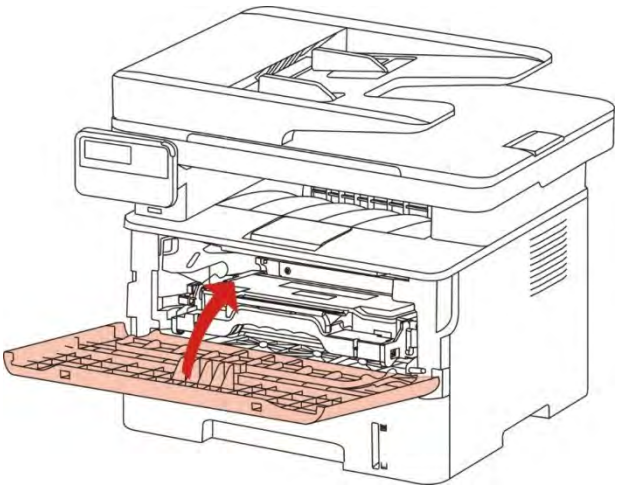

14.1.3. Duplex Unit Jam

1. Remove the duplex printing unit from the back of the printer.

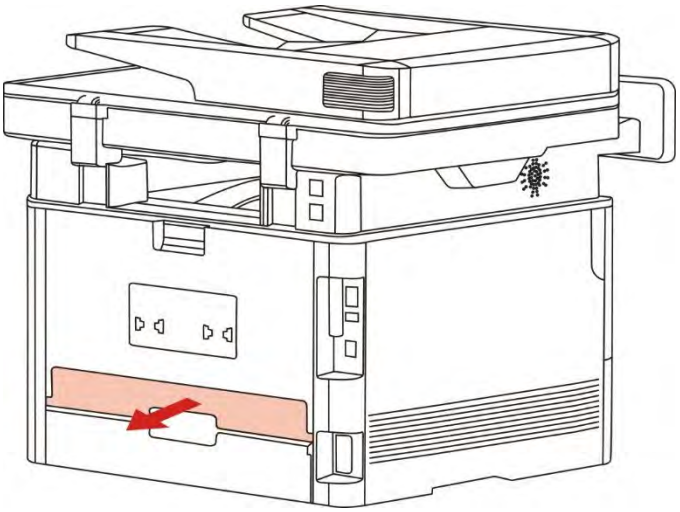

2. Remove the jammed paper from the duplex unit.

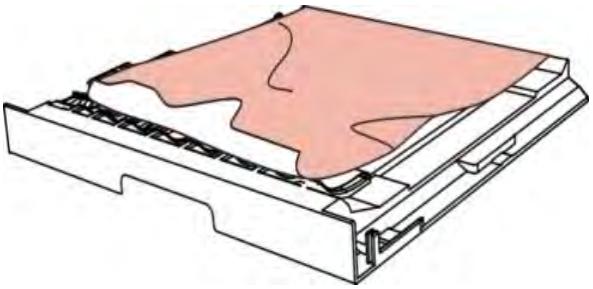

3.If the paper does not come out along with the duplex unit, open the tray and remove the jammed paper directly from the bottom.

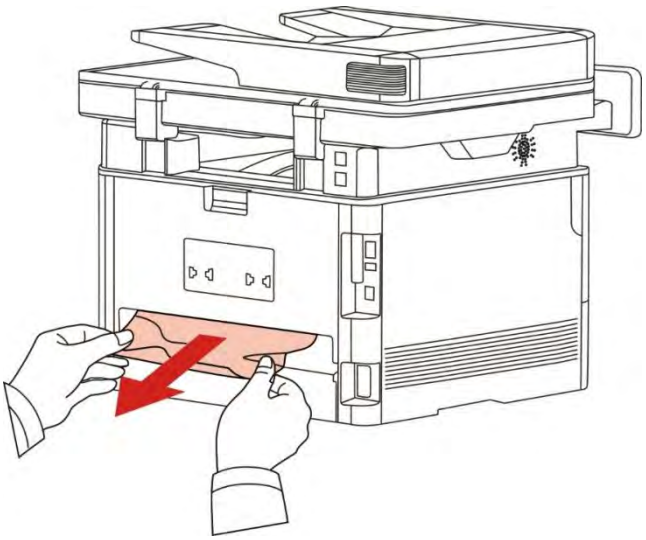

4. After taking papers jammed out, install the duplex unit back and inspect other parts to the product. If it can be ensured that there are no jammed papers, open and close the front cover and then the printer will recover printing automatically.

Note:After all papers jammed are taken out according to the above steps, close the front cover and tidy the papers in paper tray, then the printer will recover to print automatically.

• If the printer still does not start printing, please check that all the jammed paper inside the printer has been cleared.

• If you cannot remove the jammed paper yourself, please contact your local GG IMAGE authorized repair center or send the printer to the nearest GG IMAGE authorized service center for repair.

• Printer appearance may differ because of various models and functions, so the schematic diagram is only for your reference.

14.1.4. A paper jam occurs on the automatic document feeder (ADF)

1. Open the ADF's top cover.

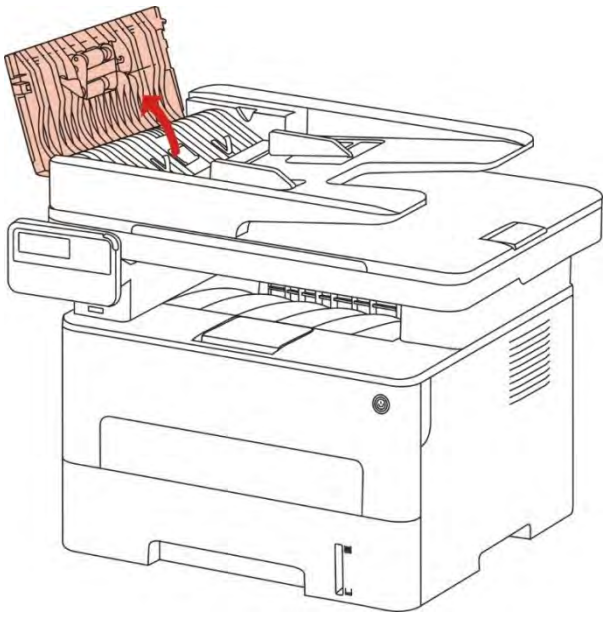

2. Remove the paper jammed from the ADF.

3. After removing the paper jamed, close the top cover and then the printer will be back to the ready state.

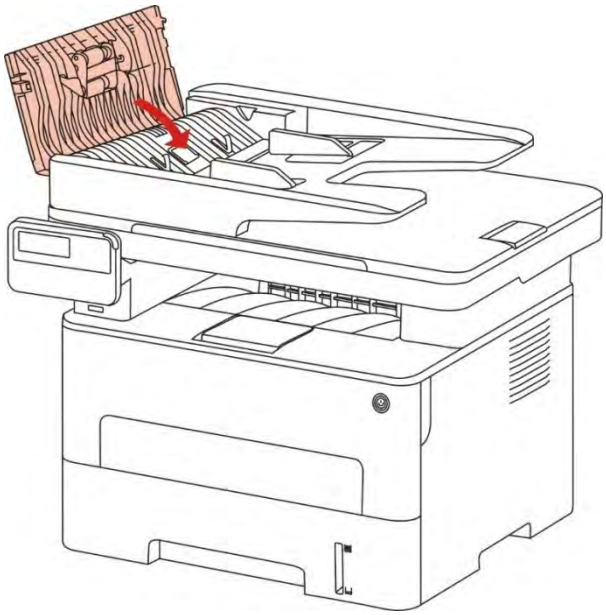

4.If it is difficult to remove the paper jammed, please try to open the scanner cover and remove it from the pressing block.

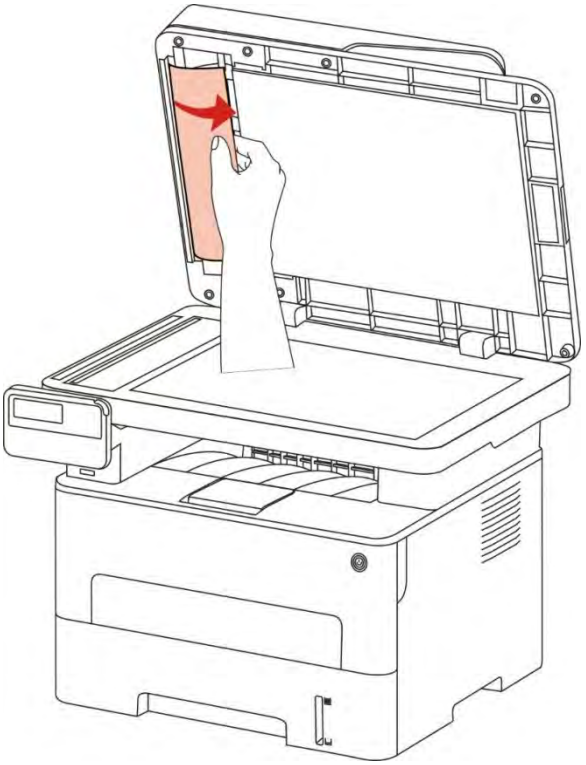

14.2. Software Failure

Problem	Solution
The printer icon will not be displayed in the “Printer and fax” folder.	Reinstall the printer driver. Ensure that the USB interface cable and the
The printer is in Ready mode but it will not perform any print job.	If the failure still exists after restarting the Make sure the network cable of USB cable is connected correctly.
Failed to install the driver	Check whether the print spooler service is enabled. Check the power supply and the connection of the printer.
The driver cannot be used if the IP address of the printer has been changed	Modify the port IP address of the printer driver. If the above method does not work, please reinstall the printer driver. It is recommended that a fixed IP address should be set to the network printer. In the DHCP network, it is recommended to bind the IP address with the MAC address of the printer.

14.3. Error Message

Error Message	Cause	Measure
No Laser Toner Cartridge Detected	The laser toner cartridge is installed incorrectly or laser toner cartridge is damaged.	The laser toner cartridge is installed correctly or new laser toner cartridge is replaced.
Toner Low (this prompt is displayed together with the standby picture alternately.)	The toner in cartridge runs low.	Please replace with a new toner cartridge.
As the toner is low, it is not available to accept the printing job (this prompt is displayed together with the standby picture alternately.)	If the toner in cartridge runs low, the printing of fax job received cannot be executed. (Normal in fax sending, file printing, copying and scanning.)	Please replace with a new toner cartridge or find out the " Low in Toner, Continue to Print" option among the fax receiving setting options and then set it as "On" for continuous printing. (Note: once the printer detects that the toner in cartridge doesn't run low during booting or opening and closing its cover, it will set the "Low in Toner, Continue to Print" option enabled before by user back to "Off".)
Toner cartridge life expired.	The toner in cartridge runs out.	Please replace with a new toner cartridge.
Feed jam	The print paper is loaded incorrectly. The paper is outside of the specification range.	Please correctly load the print paper.
Printer paper jam	The print paper is loaded incorrectly.	Please correctly load the print paper.
Scanner is Busy	With other scan jobs.	Please cancel the current scan job or wait for the completion of other scan jobs.
Scan failed	Scanner internal failure.	Please contact GG IMAGE Customer Service.
No paper in ADF	If you have selected ADF as the scan source, this message appears when you start a copy or scan job without loading paper in the ADF.	Please put in the original properly.

Paper jam occurred on ADF	This prompt appears when there is a feed jam or feed failure in copying or scanning with the ADF.	Please remove the paper jam, arrange well and put originals into the ADF for scanning again.

Note: • If the problem remains, please contact GG IMAGE Customer Service.

14.4. Common Troubleshooting

14.4.1. Common Trouble

Trouble Type	Fault phenomenon	Cause	Solution
Problems in printing	Poor print quality	See 14.4.2 Image Defects.	See 14.4.2 Image Defects.
Problems in copying	Failed to copy	The scanner is damaged.	Please contact GG IMAGE Customer Service.
	Copy Image Abnormal	• The scanner is dirty or defective. • The toner cartridge is dirty or damaged.	• Clean the scanner. • It is suggested to replace the original toner cartridge.
Problems with the Printer	The printer does not work	• Power cord of the device is not properly connected. • The cable between the computer and the printer is not connected properly. • Error in specifying the print port. • The printer is offline and User Guide of Printer is checked. • The printer has not recovered from an internal error, such as a paper jam, paper empty, etc. • Driver program of printer is not installed correctly. • The LCD screen prompts error messages.	• Ensure proper connection of the power cord. • Please disconnect the printer cable and then connect it again. • Please check printer settings of the Windows to make sure the printing job could be sent to the correct port. If the computer is equipped with several ports, please be sure to connect the printer to the correct port. • Please make sure the printer is online without any abnormality. • Please remove errors to make the printer return to normal. • Please uninstall and then reinstall the printer driver.

	Online printing does not work	• The cable between the computer and the printer is not connected properly. • Driver program of printer is not installed correctly. • Printer internal failure.	• Please disconnect the printer cable and then connect it again. • Please uninstall and then reinstall the printer driver.
Problems in scanning	Scanning error	• Data cable of the device is not properly connected. • The scan driver is installed incorrectly. • The LCD screen prompts error messages.	• Ensure proper connection of the data cable. • Reinstall the scan driver.
Problems with Paper Handling	Paper feed failure	• The printer paper isn't put properly. • The print media is beyond the usage specification range. • The pickup roller is dirty. Too many papers in paper tray.	• Please install printing medium correctly; please print with manual feed tray if special printing medium is used to print. • Please use the print media within the specification range. • Please clean the pickup roller. Take the excessive papers out from paper tray; please print with manual feed tray if special printing medium is used to print.
	Paper Jam	• Too many papers in paper tray. • The print media is beyond the usage specification range. • There is foreign matter in the feed channel. • The pickup roller is dirty. • Internal parts failure.	• Take the excessive papers out from paper tray; please print with manual feed tray if special printing medium is used to print. • Make sure to use the paper that meets specifications. please print with manual feed tray if special printing medium is used to print. • Clean the paper path. • Please clean the pickup roller.
	Print multipage feed	• Excessive static electricity on the print media. • The print media is damp or sticks together. • Internal parts failure.	• Re-separate the print media to eliminate some static electricity. It is suggested that you use the recommended print media. • Separate the print media or use better quality and dry print media..

Note:• If the trouble still can not be shooted after the above operations, please contact GG IMAGE Customer Service.

14.4.2. Image Defects

Problem	Cause	Solution
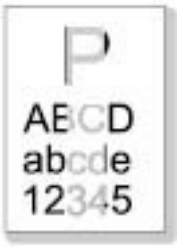 The printout is whitish or light	• The print media does not meet the usage specifications, for example the media is damp or too rough. • The resolution in the print program is set too low, concentration setting is too low, or toner saving mode is ticked. • Toner cartridge is damaged. • Toner is low.	• Please use proper print media within the specification range. • Set the resolution and concentration setting of program, or cancel ticking the save toner mode. • It is suggested to replace the original toner cartridge.
Toner spots	• Dirty toner cartridge or toner leakage. • Toner cartridge is damaged. • The print media that does not meet usage specification is used. For example, the media is damp or too rough. • The paper path is dirty. • If toner spots appear when copying and scanning, the platen glass may be dirty. • The scanner is dirty or damaged.	• It is suggested to replace the original toner cartridge. • Please use the print media within the specification range. • Clean the paper path. • Clean the platen glass.
White spots	• The print media that does not meet usage specification is used. For example, the media is damp or too rough. • The paper path is dirty. • Inner damage of toner cartridge. • The reflective glass of the laser inside the printer is dirty.	• Please use the print media within the specification range. • Clean the paper path. • It is suggested to replace the original toner cartridge. • Please clean the LSU lens.
Toner comes off	• The print media that does not meet usage specification is used. For example, the media is damp or too rough. • The printing paper medium set and paper medium placed are not consistent. • The inside of the printer is dirty. • Toner cartridge is damaged. • The parts inside the printer are damaged.	• Please use printing medium within the specification scope, and use manual feed tray for printing in case of special medium. • Please print with corresponding paper medium. • Clean the inside of the printer. • It is suggested to replace the original toner cartridge.

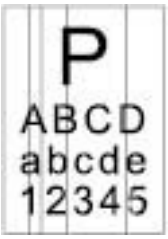 Black vertical stripes	• Dirty toner cartridge. • Damaged inner parts of toner cartridge. • The reflective glass of the laser inside the printer is dirty. • The paper path is dirty. • If black vertical stripes appear when copying or scanning, the scanner or the platen glass may be dirty. • Scanner Light bulb has smudges. • The scanner is damaged.	• Clean or replace toner cartridge • Clean the mirror of the laser at the back of the printer. • Clean the feed path of printer. • Clean the scanner or the platen glass.
 Black background(gray background)	• The print media that does not meet usage specification is used. For example, the media is damp or too rough. • Dirty toner cartridge • Damaged inner parts of toner cartridge. • The paper path is dirty. • The transfer voltage inside the printer is abnormal. • Scanning exposure. • If black background or gray background appears when copying and scanning, the platen glass may be dirty.	• Please use the print media within the specification range. • Clean or replace toner cartridge • Clean the paper path inside the printer. • Please close the cover on the manuscript, and then carry out copying and scanning. • Clean the platen glass.
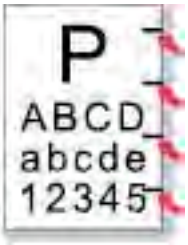 Cyclical traces appear	• Dirty toner cartridge. • Damaged inner parts of toner cartridge. • The fuser component is damaged.	• Clean or replace toner cartridge • Please contact customer services center to replace to a new fuser assembly.
 Skewed pages	• The printer paper isn’t put properly. • The feed channel of the printer is dirty.	• Make sure the print paper is placed correctly. • Clean the paper path inside the printer.

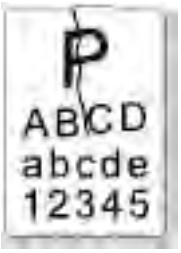 Wrinkled paper	• The printer paper isn't put properly. • The print media does not meet the usage specification. • The feed channel of the printer is dirty. • The fuser component is damaged.	• Make sure the print paper is placed correctly. • Please use print media within the specification range. • Clean the paper path inside the printer. • Please contact customer services center to replace to a new fuser assembly.
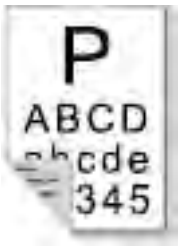 The back of the printout is dirty	• Dirty toner cartridge • The transfer roller inside the printer is dirty. • The transfer voltage inside the printer is abnormal.	• Clean or replace toner cartridge • Clean the internal transfer part of the printer.
 Whole page dark	• Toner cartridge is improperly installed. • Inner damage of toner cartridge. • Abnormal internal charging of machine or the toner cartridge is not charged. • If all-black image appear when copying and scanning, maybe it is scanning exposure, and the cover on the manuscript is not properly closed. • The scanner is damaged.	• Install ink cartridge correctly. • It is suggested to replace the original toner cartridge. • Please close the cover on the manuscript, and then carry out copying and scanning.
 The toner does not adhere to the paper	• The print media that does not meet usage specification is used. For example, the media is damp or too rough. • The inside of the printer is dirty. • Toner cartridge is damaged. • The parts inside the printer are damaged.	• Please use printing medium within the specification scope, and use manual feed tray for printing in case of special medium. • Clean the inside of the printer. • It is suggested to replace the original toner cartridge.
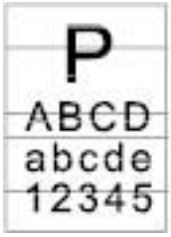 Horizontal stripes	• The toner cartridge is not installed correctly. • The toner cartridge may be damaged. • The parts inside the printer are damaged.	• Install ink cartridge correctly. • It is suggested to replace the original toner cartridge.

Note:• Failures above can be improved by cleaning or replacing toner cartridge. Please contact customer services center if the problem can still not be solved.

14.5. Fax faults

Trouble Type	Fault phenomenon	Solution
Telephone line or connection fault	The dialing tone cannot be heard.	• If you cannot hear the dialing tone after picking up the receiver, please check the connection of all telephone lines between the fax and the wall-mounted socket. • Use the telephone connecting another line to test the wall-mounted socket; if there is no dialing tone, please check the communication line.
	The printer cannot response in a fax call automatically.	• Make sure it is not the "Telephone Mode" as the receiving mode. (Please see Chapter 10.3.2 to set the receiving mode as "Fax Mode".)
Fax receiving fault	The fax cannot be received	• Make sure the fax is set with the correct receiving mode. (Please see Chapter 10.3.2 to select the receiving mode.) • If the telephone line is interfered, please try to set it as VoIP in compatibility (For compatibility setting, please see Chapter 10.3.3) .
	The fax received is somewhat blank or of poor quality	• The fax sending faxes may have a fault. • The telephone line may have a fault due to noise. • Check the printer through copy. • The toner cartridge comes to the end of its expected service life. Please replace it. (Please see Chapter 13.2.2 "Replace the Toner Cartridge".)
	The fax is well received but cannot be printed	• Check if the toner in cartridge has run low. Replace with a new toner cartridge and then print. • Find out the option of " Low in Toner, Continue to Print" among receiving setting options and then set it as On.
	An external call is being handled.	• If the Telephone mode adopted, please press Startup and then pick up the receiver immediately. • If answering the call with the extension telephone, please input the 3-digit fax receiving code (*90 by default). When the fax begins to response, please hang up.

	The dialing fails to be done	• Please check the connection of power cable. • Please check the connection of telephone line. • Change the (audio/pulse) settings. Please set in the fax sending menu with the dialing way supported for telephone line.
Fax sending fault	The printer is poor in transmitting files	• Make one copy of original to check if the fax scanner could work normally. • Transmit with a higher resolution.
	A prompt of "Communication Failure" appears in printing the fax confirmation report	• The telephone line may suffer from temporary noise or electrostatic interference. Please send the fax again. • Please try to set as VoIP in compatibility and then send again. (Please see Chapter 10.3.3 for compatibility setting.) If the problem still occurs, please check the telephone line.

15. Menu Structure

With the help of menu structure of this printer on the panel menu, you may know and set various functions. The steps of printing are as follows:

1. Press "Menu" to enter the menu setting interface.
2. Press "▲" or "▼" to select "Information Report".
3. Press "OK" and then "▲" or "▼" to select "Print Menu Structure".
4. Press "OK" to print.

16. Product Specifications

Note: • Specification values vary slightly from printers with different models with different functions ,and product specifications vary from different countries and regions.

16.1. Overview of the Specifications

Product Size(W*D*H)	415mm*360mm*352mm
Product weight (exclusive of the random toner cartridge and packaging)	10Kg
Print Environment	Print temperature range:10-32 (5-35)℃
	Print humidity range:20%RH~80%RH
Power Voltage	110V Model: AC100~127V, 50Hz/60Hz,9A
	220V Model: AC220~240V, 50Hz/60Hz,4.5A
Noise (acoustic pressure level)	Print/scan: ≤52dB(A)
	Standby: ≤30dB(A)
	Mute mode: ≤46 dB (A)
Enter network standby time:	5 minutes
Power Consumption	Network standby: the model with wireless function: 2.366W the model without wireless function: 1.888W
	Standby: ≤ 45W
	Shutdown: ≤ 0.5W
Operating System	Microsoft Windows XP/ Windows Vista/ Windows 7/ Windows 8/ Windows 8.1/ Windows 10/ Windows Server 2003/ Windows Server 2008/ Windows Server 2012（32/64 Bit）
	macOS 10.8/10.9/10.10/10.11/10.12/10.13/10.14
	Ubuntu 14.04/ Ubuntu 16.04/ Ubuntu 18.04(32/64 Bit)
	Versions higher than iOS 7.0
Communication interface	Hi-speed USB 2.0
	IEEE802.3 10Base-T/100Base-Tx
	IEEE802.11b/g/n (support WPS)

16.2. Print Specifications

Print Speed	Please see Chapter 1.1.
Print Time of First Page	≤8.5sec
Print Language	Please see Chapter 1.1.

16.3. Copy Specifications

Copy Speed	30cpm(A4)/33cpm(Letter)
FCOT	Flatbed <10 seconds ADF <12 seconds
Maximum Pages for Successive Print	99 pages
Zoom Ratio	25%~400%
Other Copy Functions	"ID copy, Receipt copy, N-up copy, Clone copy"

16.4. Scan Specifications

Scan Type	Flatbed+ADF
Maximum Scan Size	Flatbed: 216×297mm ADF: 216×356 mm
Chromoscan	Yes
Scan Output Function	Scan to E-mail, PC, FTP and USB

G&G