BRITISH FIRES

// INSTALLATION & USER INSTRUCTIONS

NEW FOREST ELECTRIC FIRE

// INSTALLATION & USER INSTRUCTIONS

Section	Contents	Page
1.0	Important Notes	01–03
2.0	Grounding Instructions	03
3.0	Appliance Data for EF40-48B	04
4.0	Component Checklist	05
5.0	Site Requirements	05
6.0	Clearances To Combustibles	06
7.0	Unpacking The Appliance	06
8.0	Installation	07
8.1	Installation – Stud Wall	08–10
8.2	Installation – Floating	11–13
9.0	Preparing The appliance	14
10.0	Forest View Fuel Bed Layout	15–16
10.1	Slate Fuel Bed Layout	17–18
10.2	Diamond Light Fuel Bed Layout	19–20
11.0	Pairing The Remote Control	21
12.0	Operating The Appliance	21–25
13.0	Safety Cut-out System	26
14.0	Cleaning and Maintenance	26
15.0	Troubleshooting Guide	27
16.0	Appliance Dimensions	29
17.0	Three Year Guarantee	30
17.0	Terms and Conditions	30

// 1.0 IMPORTANT NOTES

Important – these instructions should be read carefully and retained for future reference.

When using this electrical appliance, basic precautions should be followed to reduce the risk of fire, electric shock and injury to person, including the following:

1) Read all instructions before using this heater.

2) This heater is hot when in use. To avoid burns, do not let bare skin touch hot surface. If provided, use handles when moving this heater. Keep combustible materials, such as furniture, pillows, bedding,

3) Extreme caution is necessary when any heater is used by or near children or invalids and whenever the heater is left operating and unattended.

4) Do not operate any heater after it malfunctions. Disconnect power at service panel and have heater inspected by a reputable electrician before reusing.

5) Do not use outdoors.

6) To disconnect heater, turn controls to off, and turn off power to heater circuit at main disconnect panel (or operate internal disconnect switch if provided).

7) Do not insert or allow foreign objects to enter any ventilation or exhaust opening as this may cause an electric shock or fire,or damage the heater.

8) To prevent a possible fire, do not block air intakes or exhaust in any manner. Do not use on soft surfaces, like a bed, where openings may become blocked.

9) A heater has hot and arcing or sparking parts inside. Do not use it in areas where gasoline, paint, or flammable liquids are used or stored.

10) Use this heater only as described in this manual. Any other use not recommended by the manufacturer may cause fire, electric shock, or injury to persons.

11) If heater may include an audible or visual alarm to warn that parts of the heater are getting excessively hot. If the alarm sounds (or illuminates), immediately turn the heater off and inspect for any objects on or adjacent to the heater that may have blocked the airflow or otherwise caused high temperatures to have occurred.

DO NOT OPERATE THE HEATER WITH THE ALARM SOUNDING OR ILLUMINATING.

12) SAVE THESE INSTRUCTIONS

This heater must be used on an AC supply only and the voltage marked on the heater's rating label must correspond to the supply voltage.

DO NOT switch the appliance on until it is properly installed as described in this manual.

This appliance can be used by children aged from 8 years and above and persons with reduced physical, sensory or mental capabilities or lack of experience and knowledge if they have been given supervision or instruction concerning use of the appliance in a safe way and understand the hazards involved. Children shall not play with the appliance. Cleaning and user maintenance shall not be made by children without supervision.

Children of less than 3 years should be kept away unless continuously supervised. Children aged from 3 years and less than 8 years shall only switch on/off the appliance provided that it has been placed or installed in its intended normal operating position and they have been given supervision or instruction concerning use of the appliance in a safe way and understand the hazards involved.

Children aged from 3 years and less than 8 years shall not plug in, regulate and clean the appliance or perform user maintenance.

CAUTION: Some parts of this appliance can become very hot and cause burns. Particular attention has to be given where children and vulnerable people are present.

Check that all parts included are intact and not damaged. If the supply cord is damaged, it must be replaced by the manufacturer, its service agent or similarly qualified persons in order to avoid a hazard. Never use the appliance if the cord or any part of the appliance shows signs of damage. The heater must not be located immediately below a socket-outlet.

DO NOT use this heater in the immediate surroundings of a bath, a shower or a swimming pool.

WARNING: In order to avoid overheating, do not cover the fan of the heater.

DO NOT use this heater with a programmer, timer, separate remote-control system or any other device that switches the heater on automatically, since a fire risk exists if the heater is covered or positioned incorrectly.

CAUTION: In order to avoid a hazard due to inadvertent resetting of the thermal cut-out, this appliance must not be supplied through an external switching device, such as a timer, or connected to a circuit that is regularly switched on and off by the utility.

WARNING: This heater is not equipped with a device to control the room temperature. Do not use this heater in small rooms when they are occupied by persons not capable of leaving the room on their own, unless constant supervision is provided.

Keep furniture, curtains and other fabric material away from the appliance.

DO NOT leave the appliance unattended during use.

DO NOT run the mains cable under carpets, rugs etc.

DO NOT cover or obstruct the heater in any way. Overheating will result if it is accidentally covered.

Never immerse the appliance in water or any other liquids.

DO NOT use the appliance outdoors.

Before cleaning the appliance, ensure it is unplugged from the power and that it is completely cool.

DO NOT clean the appliance with abrasive chemicals.

Never use accessories that are not recommended or supplied by the manufacturer. It could cause danger to the user or damage to the appliance.

DO NOT insert or allow foreign objects to enter the inlet or outlet vents as this may result in electric shock, fire or damage to the appliance.

DO NOT install the fire using an extension cord.

Unplug from the mains supply if the appliance is not to be used for long periods.

This appliance is only suitable for well-insulated spaces or occasional use.

DO NOT use this appliance in an open flue. CAUTION: The user is cautioned that changes or modifications not expressly approved by the party responsible for compliance could void the user's authority to operate the equipment. This device complies with Part 15 of the FCC Rules.

Operation is subject to the following two conditions: (1) this device may not cause harmful interference, and (2) this device must accept any interference received, including interference that may cause undesired operation.

NOTE: This equipment has been tested and found to comply with the limits for a Class B digital device, pursuant to Part 15 of the FCC Rules.

These limits are designed to provide reasonable protection against harmful interference in a residential installation.

This equipment generates, uses and can radiate radio frequency energy and, if not installed and used in accordance with the instructions, may cause harmful interference to radio communications. However, there is no guarantee that interference will not occur in a particular installation. If this equipment does cause harmful interference to radio or television reception, which can be determined by turning the equipment off and on, the user is encouraged to

© 2020 British Fires

// 1.0 IMPORTANT NOTES

Important Notes Continued

try to correct the interference by one or more of the following measures:

Reorient or relocate the receiving antenna.-- Increase the separation between the equipment and receiver.

Connect the equipment into an outlet on a circuit different from that to which the receiver is connected.

Consult the dealer or an experienced radio/TV technician for help.

FCC Radiation Exposure Statement:

This equipment complies with FCC radiation exposure limits set forth for an uncontrolled environment.

This equipment should be installed and operated with a minimum distance of 20cm between the radiator and your body.

This transmitter must not be co-located or operating in conjunction with any other antenna or transmitter.

// 2.0 GROUNDING INSTRUCTIONS

This heater is for use on 120 volts. The cord has a plug as shown at (A) in figure below. An adaptor as shown at (C) is available for connecting three-blade grounding-type plugs to two-slot receptacles. The green grounding lug extending from the adaptor must be connected to a permanent ground such as a properly grounded outlet box.

The adaptor should not be used if a three-slot grounded receptacle is available.

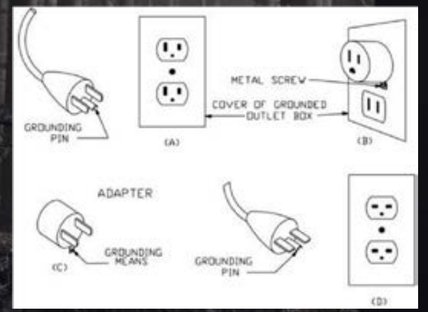

// NOTE:

Adaptors are NOT for use in Canada

// WARNING:

Before enclosing the appliance, test the power in situation in order to ensure the power to the appliance working properly.

// 3.0 APPLIANCE DATA FOR THE NEW FOREST ELECTRIC FIRE

EF40-48B

Weight (lb.s)	84.2 lbs.
Dimensions (in.)	H 22.1 x W 47.2 x D 11.7 in.
Supply Voltage and Rating Power	120V AC, 60Hz 1500W
Heating Elements	1500 W
Lighting	LED

This fire is fitted with LED's (Light Emitting Diode) in place of conventional bulbs. LED's generate the same light levels as conventional bulbs, but use a fraction of the energy consumed.

Item	Symbol	Value	Unit
Heat Output			
Nominal heat output	Pnom	1.5	KW
Minimum heat output (indicative)	Pmin	0.75	KW
Maximum continuous heat output	Pmax, c	1.5	KW

Item	Unit
Types of heat input, for electric storage local space heaters only	
Manual heat charge control with integrated thermostat	N/A
Manual heat charge control with room and/or outdoor temp. feedback	N/A
Electronic heat charge control with room and/or outdoor temp. feedback	N/A
Fan assisted heat output	N/A

Item	Unit
Other control options	
Room temperature control with presence detection	No
Room temperature control with open window detection	Yes
With distance control option	No
With adaptive start control	No
With black bulb sensor	No

Auxiliary electricity consumption			
At nominal heat output	elmax	0.0	KW
At minimum heat output	elmin	0.0	KW
In standby mode	elSB	0.0	KW

Type of heat output/room temperature control	
Single stage heat output and no room temperature control	No
Two or more manual stages no temperature control	No
With mechanical thermostat room temperature control	Yes
With electronic room temperature control	No
Electronic room temperature control plus day timer	Yes
Electronic room temperature control plus week timer	Yes

© 2020 British Fires

// 4.0 COMPONENT CHECKLIST

Quantity	Description
1	Heater unit
1	Wall bracket
1	Remote control handset
1	Box of logs
1	Bag of slate
1	Bag of bark
1	Bag husk
1	Bag of large crystals
1	Bag of small crystals
2	AAA batteries
2	Blanking plates
4	Small end trims
2	Large end trims
12	Firebox screws
8	Wall plugs
8	Fixing screws

// 5.0 SITE REQUIREMENTS

It should be noted that the appliance creates warm convected air currents. These currents move heat from the room surroundings to, and up the wall surfaces adjacent to the heater.

Installing the appliance next to these types of wall coverings or operating the heater where imputiries in the air, (such as tobacco smoke) exist, may slightly discolour wall finishing.

If the appliance is to be secure on a dry lined or timber framed construction then the integrity and ability of the wall to secure the appliance must be confirmed. It is important in these circumstances that any vapour barrier and/or structural members of the house frame are not damaged.

If you are unsure of the ability of the wall to secure the appliance and/or which type of wall fixing to use, you should take professional advice and obtain the correct fixings. Alternatively, find a more suitable wall location.

DO NOT run the supply cable under carpets.
DO NOT site in a position where curtains or drapes could cover the appliance, or other soft materials could cover e.g. below a coat rack.
DO NOT site behind an opening door where mechanical impact/damage could occur.
DO NOT site where the supply cable would become a trip hazard.
DO NOT sit, stand or forcefully pull on the appliance.
DO NOT obstruct, cover or force items into the openings.
DO NOT use the heater to dry clothes.
DO NOT site/use in an outdoor location(s).

It is important that the following clearances are maintained from the appliance to combustible materials. These clearances are dependent on the securing location as defined on the following pages.

// 6.0 CLEARANCES TO COMBUSTIBLES

The minimum distance to the front of the appliance is 35.4in.

There are no clearances for above or to the side of the appliance, apart from being clear of curtains and drapes for a flush wall installation.

If the stud wall immediately above the heater of the appliance protrudes in front of the appliance rather then finishing flush, then the over hanging section of the installation must be made from a non-combustible material, such as calcium silicate.

*See page 10 for more details

// CAUTION:

This appliance is heavy. Always seek assistance whilst unpacking and/or during installation. Please read all the instructions before continuing to unpack or install appliance.

© 2020 British Fires

// 7.0 UNPACKING THE APPLIANCE

BEFORE STARTING THE INSTALLATION OF THIS FIREPLACE, PLEASE READ THE FOLLOWING:

1) The installation should be carried out by two adults to avoid injury or damage. If for any reason it is considered too heavy, please obtain assistance.

2) When lifting the electric appliance, always keep your back straight. Bend your legs and not your back. Avoid twisting at the waist. It is better to reposition your feet.

3) Avoid upper body / top heavy bending. Always bend from the knees rather than the waist. Do not lean forward or sideways while handling the appliance.

4) Always grip the appliance with the palm of the hand – do not use the tips of fingers for support.

5) Always keep the appliance as close to the body as possible. This will minimize the cantilever action.

6) Use gloves to provide additional grip.

7) Unpack the package and lift the appliance gently out of the box. Put it on a flat surface with the front panel facing forward.

// IMPORTANT:

Please read completely through the instructions and verify that all listed parts are present before assembly.

// 8.0 INSTALLATION

British Fires assumes absolutely no responsibility for injuries and damages that may occur due to improper installation or handling.

Remove any protective film coatings from the finished/decorative surfaces of the appliance, if any. After having selected the final position of the appliance taking into account the integrity of the wall the electric appliance may be secured to the wall.

To ensure customer safety, be sure to design the installation so that the strength of both the wall and any wall fixings used are sufficient. Do not block the ventilation holes of the appliance. The wall onto which the appliance/stud wall is installed must be flat. Install only on a vertical surface. Avoid sloped surfaces. Installation onto anything other than a vertical wall may result in fire, damage or injury.

If the appliance/stud wall is to be mounted on a dry lined wall or a timber framed construction wall then efforts should be made to fix into two or more wooden studs, or supporting wooden members of the wall using the fixing screws provided. If this is not achievable then the wall should be strengthened using appropriate building materials.

Ensure that the correct wall plugs are used for the type of wall that the stud work is being connected to.

Ensure the plug or fuse spur is fully accessible.

// WARNING:

Before enclosing the appliance, test the power in situation in order to ensure the power to the appliance working properly.

⚠ WARNING

The wall where the appliance is to be installed must be capable of long-term support of the total load of the appliance. Measures should also be taken to ensure sufficient strength to withstand the force of earthquakes, vibration and other external forces. Plasterboard alone is not considered to be a structural material. It is not recommended to rely on plasterboard fixings alone to support the weight of the appliance.

Check regularly for security of wall fixings as appropriate. Also check security of supply cable and connections. If the supply cable becomes damaged, it must be replaced by a service agent or competent person, such as a qualified electrician.

// 8.1 INSTALLATION – STUDWALL

Stud wall installation

The stud wall **MUST** include a header at the dimensions, highlighted on the following pages. This is to ensure that the weight of the finished wall is not resting on top of the appliance.

The power inlet cable can be installed through your choice of two locations on the top, right hand corner of the appliance. Each can be accessed through one removable plate.

This appliance should be positioned on a firm level surface and in a clean 'dust free' environment. If fitted into an open chimney, the chimney must be blocked off to reduce the risk of draught and damp through the fire, which may cause the safety cut out system in the fan heater to operate.

The base of the opening/stud work must be able to take the full weight of the appliance.

Any protruding headers MUST be made of a non-combustible material. See page 10.

To install into a stud wall the mounting bracket must be removed from the rear of the appliance as shown in section 8.2.

Once the frame work has been constructed and secured to the wall and the appliance is in its end position, ensure that there is power to the appliance before any cladding/plasterboard is installed.

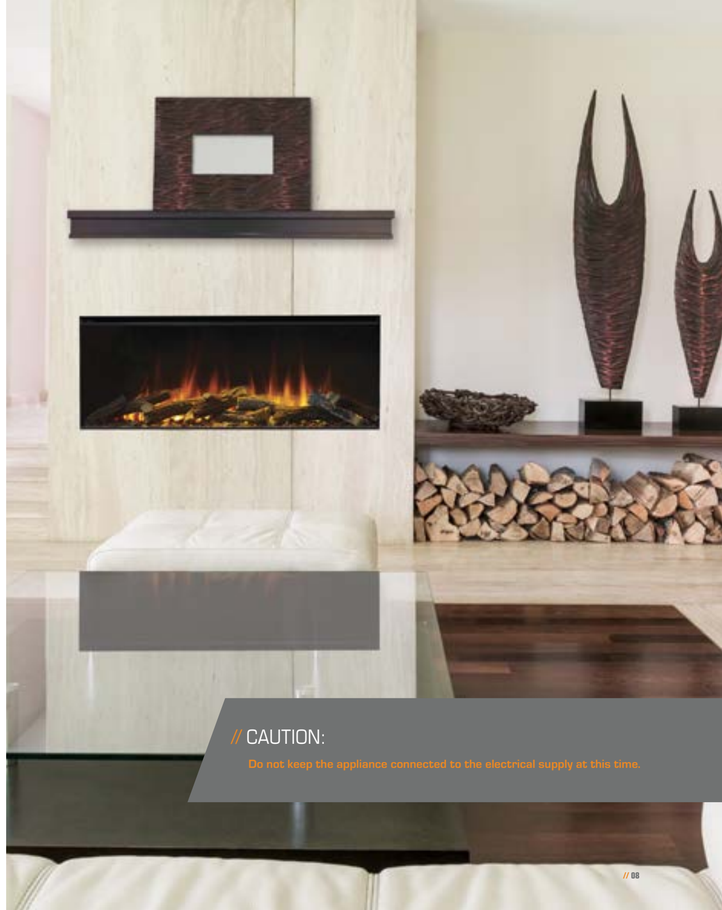

// CAUTION:

Do not keep the appliance connected to the electrical supply at this time.

© 2020 British Fires

// 8.1 INSTALLATION – STUDWALL

Stud wall installation Continued

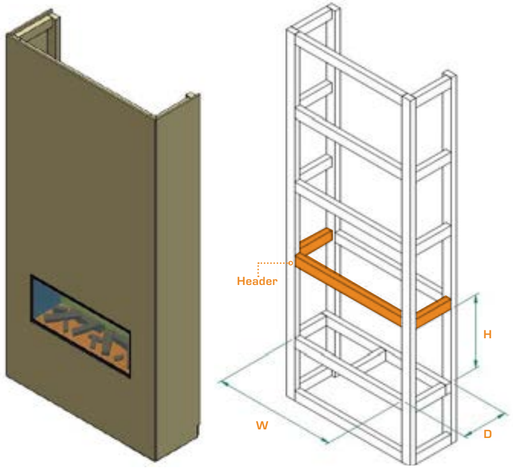

// One-sided (fully-recessed) installation

Open Dimensions		
Height	Width	Depth
22.4in	46.5in	11.8in

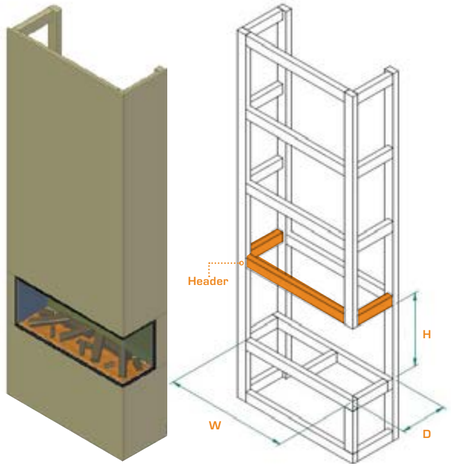

// Two-sided installation

Open Dimensions		
Height	Width	Depth
22.4in	46.5in	11.8in

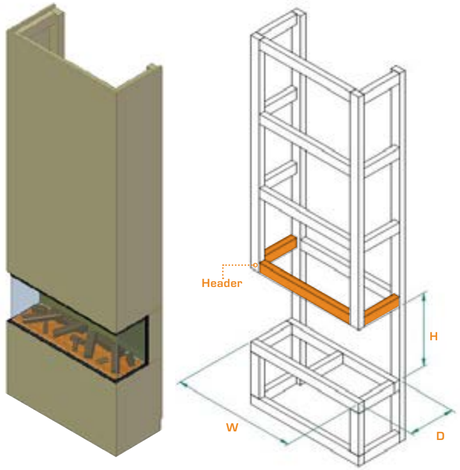

// Three-sided installation

Open Dimensions		
Height	Width	Depth
22.4in	46.5in	11.8in

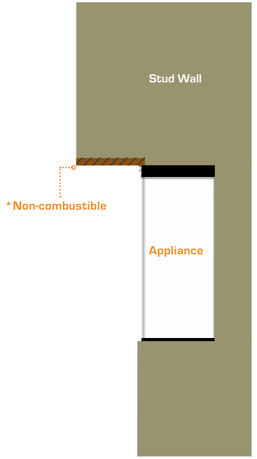

*If the stud wall immediately above the heater protrudes beyond the front of the appliance then the over-hanging section of the installation must be made from a non-combustible material, such as calcium silicate/fireboard.

© 2020 British Fires

// 8.2 INSTALLATION – FLOATING

Floating installation

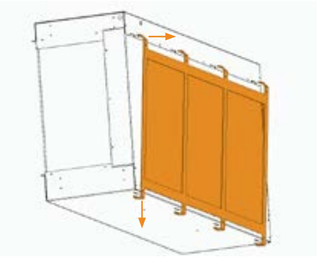

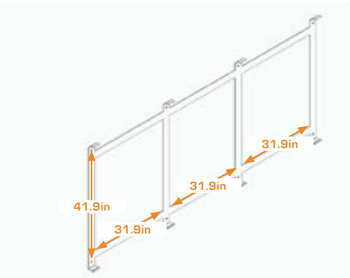

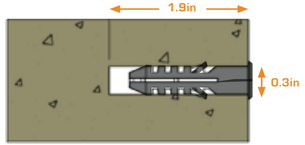

Before Installing the appliance onto the wall with the surround, secure the side trims each side of the appliance as described in section 9.0 Preparing the Appliance.

The installation should be carried out by two adults to avoid injury or damage. If for any reason it is considered too heavy, please obtain assistance.

1) Remove the mounting bracket from rear of the appliance by moving the bracket down *and* out from the appliance.

2) Find the optimal place to mount your appliance. Consider the proper position relative to your room, placement of furniture and windows.

3) Hold the mounting bracket up to the wall to verify the correct location and ensure that the mounting bracket is level. Use a pencil to mark the eight mounting holes on the wall at the desired mounting location, using the mounting bracket as a template.

4) Drill a 0.3in diameter holes to at least 1.9in deep on the marked points.

NOTE: If installing the mounting bracket to a wall stud, there is no need to drill the holes in the wood and no need for the plastic wall anchors. It is recommended to install the mounting bracket to at least one wooden stud.

5) Tap the 8x wall anchors into the pre–drilled holes with a hammer until they are flush with the wall.

6) Secure the mounting bracket to the wall by using all 8 wall-fixing screws.

7) Carefully, install the appliance back onto the wall bracket.

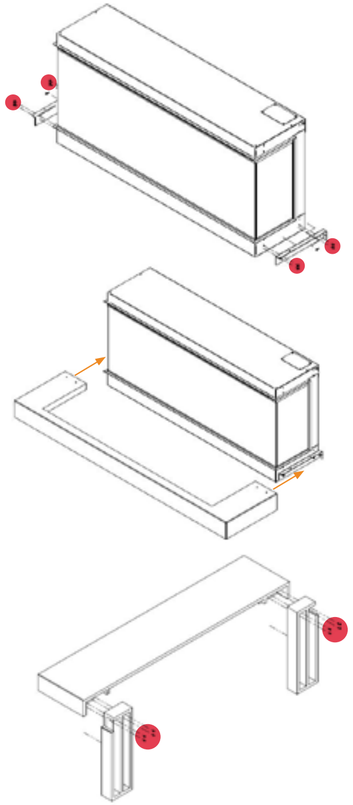

8) With the appliance on the wall offer the floating shelf brackets to either sides of the appliance lining up all 8x holes on the floating bracket with the 8x holes on the side of the firebox. Then mark with a pencil through the hole in the end of the bracket against the wall.

9) Remove the appliance off of the wall.

10) Drill a 0.3in hole at least 1.9in deep on either side of the appliance.

11) Tap the two wall anchors into the pre–drilled holes with a hammer until they are flush with the wall.

12) Install the appliance back onto the wall and screw the floating shelf brackets on to the sides of the appliance with the 8x loose firebox screws provided.

13) Then screw the wall screws through the rear of the floating shelf brackets and into the wall plugs.

14) Carefully slide the bottom of the surround onto the floating shelf brackets.

15) Screw the two legs of the surround from the rear onto the back of the top section of the surround as shown, left

© 2020 British Fires

// 8.2 INSTALLATION – FLOATING

Floating installation continued

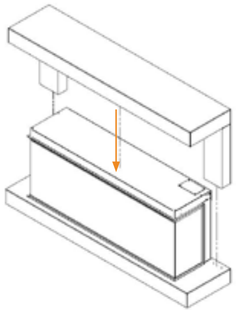

16) Carefully lower the top section of the surround onto the top of the firebox.

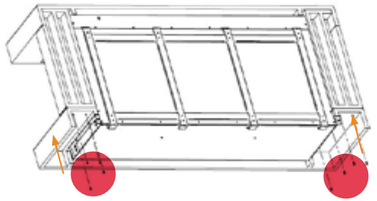

17) Underneath the appliance, with the surround screws, screw up through the bottom surround and into the legs of the surround top section and up through the floating shelf brackets on the appliance the top section.

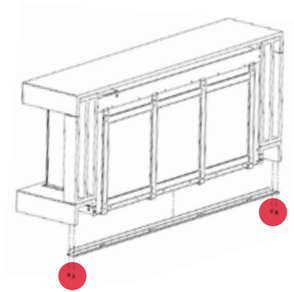

18) Install the bottom panel onto the underside to the surround with the four surround screws left over.

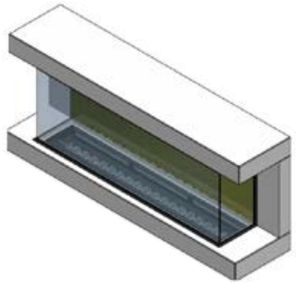

// 9.0 PREPARING THE APPLIANCE

For a two or three-sided installation

For a two-sided installation, add one of the blanking plates and secure with the six firebox screws into position. Next add the two small trims and the large trim to the side of the appliance. Then line the holes of the trims with the corresponding holes of the firebox and screw into position with the six countersunk screws, previously removed.

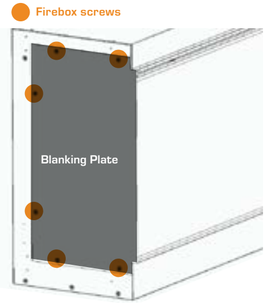

For a three-sided installation, secure the small and large trims on both ends of the appliance in line with the corresponding holes of the firebox. Secure into position with the 12 supplied firebox screws, six on each side.

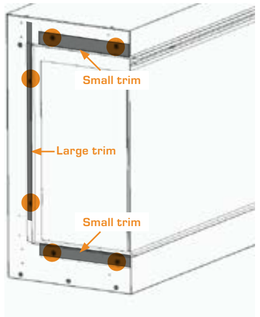

We strongly recommend that two people are used to remove the glass, both using protective gloves.

To remove the front glass from the appliance, use a cross headed screwdriver to remove the screws from either end of the top bracket of the appliance, holding the glass in place.

Ensure the glass is supported at all times.

Next, gently leaver the top of the glass towards you, ensuring you have full support of the glass.

Lift the glass up and out from the appliance and place the glass on a soft, flat surface on the floor.

Insert your preferred fuel bed options as shown in the following pages in section 10.0 – 10.2.

To re-install the glass, see the instructions in reverse order.

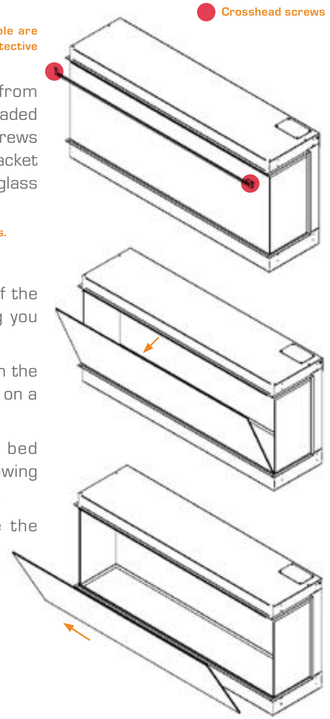

© 2020 British Fires

// 10.0 FOREST VIEW FUEL BED LAYOUT

Forest View

Taking a small account of the small crystals, scatter randomly over the frosted base as shown above.

PRO TIP – Use the small crystals to pick up extra light from the fuel bed to give you the best effect.

Use the contents from the Forest terrain bag and place this in the formation shown above (image 2) towards the front and sides of the frosted base. There should be a single layer to cover this area of the frosted bed and the crystals still visible.

Using the contents from the Husk bag, cover the area on the frosted bed that is still exposed, making sure the crystals are still visible.

Use the slate pieces and place these randomly on the bed as shown in image 4, above.

Place the logs on top of the base layer created by the crystals, Forest terrain, Husk and slate pieces. Position them as shown above. The logs can be placed in any order, for this look the larger logs are in the center with the remaining logs around them.

IMPORTANT – Place the logs carefully on the fuel bed so you do not make contact with the rear and side glass. Contact with glass may cause damage.

© 2020 British

// 10.1 SLATE VIEW FUEL BED LAYOUT

Slate View

Evenly scatter the small crystals over the frosted base as shown in image 1, left. The crystals should be spread out across the whole base and form a layer covering the whole area.

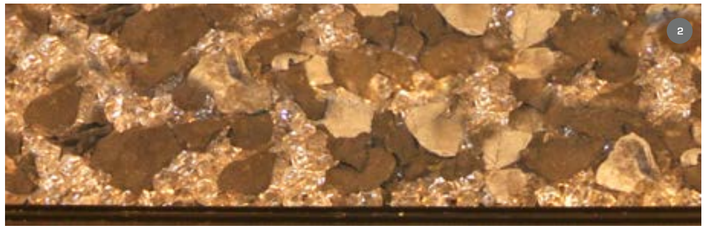

Take the two types of the slate effect pieces and spread these evenly throughout, on top of the bed of crystals.

Place the logs on top of the base layer created by the crystals and slate pieces. Position them as shown in image 3. The logs can be placed in any order, we have used the larger ones as centre pieces and placed the remaining logs around them.

IMPORTANT – Place the logs carefully on the fuel bed ensuring you do not make contact with the rear or side glass. Coming into contact with glass may cause damage.

// 10.2 DIAMOND LIGHT VIEW FUEL BED LAYOUT

Diamond light View

Evenly scatter the small crystals over the frosted base as shown in image 1, left. The crystals should be spread out across the whole base and form a layer covering the whole area.

Take the larger crystals and place these in position as shown in image 2, left. For the best results, remove a small amount of the small crystals and place the larger crystal directly on the frosted base.

Three Diamond Light colour settings

© 2020 British Fires

// 11.0 PAIRING THE REMOTE CONTROL

Pairing the remote control

Within 1 minute of turning the power on by the main ON/OFF switch (located on the front, top right hand side of the appliance), press and hold and the and buttons on the remote control for 3 seconds, to remotely pair to the appliance, the LCD only displays bL (displayed at the display temperature position) and flashes 5S, then returns to the current display state.

The remote is then paired to the appliance.

// 12.0 OPERATING THE APPLIANCE

The ON/OFF switch is located on the front, top right hand side of the appliance.
Press the O/I button once to turn the fire on.

REMOTE CONTROL

The button distribution of the remote controller is as shown right, and the current state information of the electric fireplace, such as the flame effect, fuel bed, setting, temperature and time set, is displayed on the LCD screen on the remote control.

1) Standby
Turns the appliance ON/OFF standby, the default settings are: heater set to 82°F/80°F, the main flame effect is F1, the Fuel bed is L1 (no temperature display).

2) Flame Control
Changes the flame effect brightness F1, F2, F3, F4, F1 (cycle adjustment)

3) Heater
Heater button switches to the temperature adjustment option when the weekly timing function is adjusted. Then use the ⊕ and ⊖ buttons to select the desired temperature. The temperature cannot be adjusted while the daily timer control is in use. Only the heating function can be switched.

Temperature Setting range:
Centigrade: 17°C, 18°C, 19°C, 20°C, 21°C, 22°C, 23°C, 24°C, 25°C, 79°F, 80°F, ON, 17°C (Cycle)
Fahrenheit: 62°F, 63°F, 64°F, 65°F, 66°F, 67°F, 68°F, 69°F, 70°F, 71°F, 72°F, 73°F, 74°F, 75°F, 76°F, 77°F, 78°F, 79°F, 80°F, 81°F, 82°F, ON, 62°F (Cycle)
*Press and hold the heater button for 3 seconds can transfer from °C to °F.

4) Fuel Bed
Changes the colour of the fuel bed. L1, L2, L3, L4, L1 (cycle adjustment)

5) Sleep Timer
Adjusts the timer: 1H, 2H, 3H, 4H, 5H, 6H, 7H, 8H, 9H, OF, 1H (cycle)

6) Down Light
Turns the down lighting ON/OFF, (the down light symbol will be lit when it is turned on).

7) Time and Week Settings
Press to enter the time and week timer settings.

8) Lower temperature 1°F
Press this button to lower the temperature by –1°F, incrementally, while the heating is turned on.

9) Raise Temperature 1°F
Press this button to raise the temperature by +1°F, incrementally, while the heating is turned on.

10) Date Set
To choose from Monday to Sunday or week timer mode option. Option mode:1-2-3-4-5-6-7-A-oF.

© 2019 British Fires

// 12.0 OPERATING THE APPLIANCE

Continued

Standby Button:

When powering up for the first time, press the "on/off switch" on the fire. The default parameters of the system are: the heating gear position is "82°F/27°C", the main flame gear position is L1 (Orange), no heating.

Changing Flame Effect:

In the power-on state, press this button, the digital screen displays the flame position and the flame indicator is bright, and the main flame position can be adjusted. The flame brightness settings are: F1, F2, F3, F4, Set as follows:

Button	Display	Flame Effect
1st Press	F1	Full
2nd Press	F2	Medium
3rd Press	F3	Low
4th Press	F4	Cycle through settings

Heating Operations:

1) Press the heater button to turn the heating function on and off and adjust the temperature setting. Heater is divided into temperature settings: 62°, 63°, 64°, 65°, 66°, 67F, 68°, 69°, 70°, 71°, 72, 73°, 74°, 75°, 76°, 77°, 78°, 79°, 80°, 81°, 82°F, ON. (Circular operation control)

2) Press and hold the heater button for 3 seconds to convert the temperature unit from °C to °F. The temperature display window will flash. After the temperature is set, the display unit will flash 5 times, then automatically saves the settings and exits the setting state. After the display unit is turned on, if there is no operation within 10 seconds, the setting status is also exited.

3) Fan delay function: After the appliance is turned off, the fan will continue running for 15 seconds then stop.

Open Window Detection function: When the appliance is heating, the ambient temperature suddenly drops ≥-5°C within 10 minutes, and the environment cannot be warmed up within 30 minutes.

The appliance will automatically display "OP". The heating function will be automatically turned off, and when the "OP" is displayed, it can be turned off and then restarted by turning off and on the appliance to clear the fault code.

4) This appliance has a non-self-resetting overheat protection device (thermal cut-out) which will activate if the air inlets or outlets are obstructed. For safety reasons the fire will NOT switch on again automatically, the following procedure must be carried out before the fire can be operated.

NOTE: The flame-effect will remain operational if the cut-out is activated, only the fan heater is prevented from working.

Switch OFF the appliance at the wall socket or outlet. Leave the fire OFF for a period of no less than 10 minutes, ensuring all obstructions are removed. Switch the appliance ON at the wall. Ensure the appliance is turned ON at the control switches. If the fire fails to operate correctly, repeat the above procedure.

Fuel Bed Options:

Once powered, press the "Fuel Bed" button and the LCD screen on the remote will display the fuel bed icon. Now, the fuel bed colour can be adjusted. The different settings are: L1, L2, L3, L4; Fuel bed light. Set as follows:

Button	Display	Flame Effect
1st Press	L1	Orange
2nd Press	L2	Blue
3rd Press	L3	Orange + Blue
4th Press	L4	Cycle through settings

Setting Sleep Timer:

In the timed display, press the "Sleep Timer" button to adjust the time, plus one hour for each press. (You can't enter the weekly timing selection, you can only set the current automatic shutdown time. This function is available when the weekly timing function is turned on. Will not operate). Timing range: 1H, 2H, 3H, 4H, 5H, 6H, 7H, 8H, 9H, OF, 1H (cycle adjustment).

Control Down Lighting:

Turns the down lighting lights on and off.

Setting Clock and Timer:

Use the date button to choose from Monday to Sunday or week timer mode option. Option mode: 1-2-3-4-5-6-7-A-oF.

Clock setting:

1) At standby state (after the unit is plugged in and before pressing "main power"), press and hold the Setting button on the remote for 3 seconds, the digital display will the flash "00:00".

2) Press ⊕ on the remote control to set the hour, press the remote control ⊖ to set the minutes.

3) Press "Setting" to enter the setting of the week timer. Press to select Sunday to Saturday, The date symbol will be light up after the day is selected. When finished, press the button to exit setting.

4) The current clock must be set after the initial power-on or power-off, otherwise the clock will remain "00:00" status and you won't be able to set the week timer function.

© 2020 British Fires

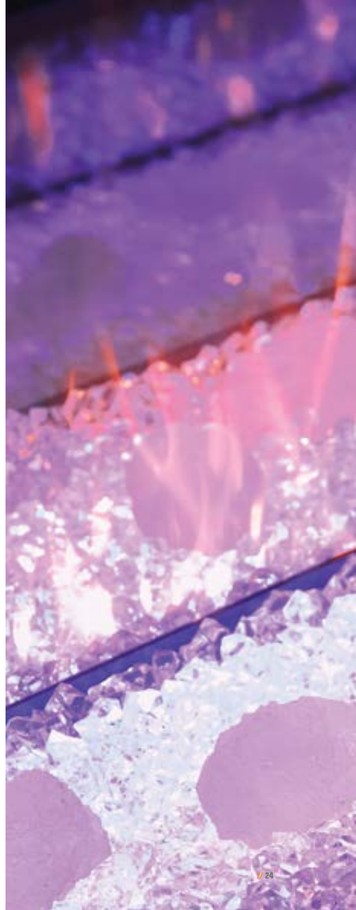

// 12.0 OPERATING THE APPLIANCE

Continued

Heat settings:

Use remote control's Heater button to select the temperature. The system default parameters are: 82°F/80°F. Press ⊕ & ⊖ buttons to select the temperature when the heating is turned on. Temperature range: 62°, 63°, 64°, 65°, 66°, 67F, 68°, 69°, 70°, 71°, 72, 73°, 74°, 75°, 76°, 77°, 78°, 79°, 80°, 81°, 82°F. (Cycle)

Timing switch ON/OFF preset:

1) While in the standby state, press the sleep timer button on the remote for three seconds to pre set timing switch on/off the week timer. Enter mode 1, while the display is "1 ON", the clock will be "01:00", press ⊕ to set hour, press ⊖ to set minute, press to set the week, every press on the will show SU, MO, TU, WE, TH, FR, SA and flash in turn, you can use the ⊕ key to select or de-select the desired date. The ▲indicates all of the selected days. Press the "Heater" button to enter the temperature setting, then press the ⊕ & ⊖ button to set temperature.

2) Press "Setting" again to set the timer switch off, the display is 1 OFF, the clock is displayed as "02:00", press ⊕ to set hour, press ⊖ to set minute, the date of the timer off is the same as the timer on, you can't change this manually. After setting, press to enter the setting of mode 2, which operates the same as mode 1. You can set mode 1 to mode 7 with the above method. Press or on the remote for 3 seconds to save setting and exit week timer setting.

3) After the preset timing ON/OFF switch, you can use clock/timer button to select the desired timing mode 1-2-3-4-5-6-7- auto option, after the option shows five seconds without any operation, it will save the selected option and enter the current setting of the option, the timer logo of the display lighten and will automatically run the preset switch setting program. You can individually select each setting of modes 1–7 for automatic ON/OFF switching, or you can preset the desired settings, and then select "auto mode" for multiple preset series executions.

4) If you want to set the ON/OFF switch and temperature setting for different periods of the week, then set the switching time and temperature of each day from Sunday to Monday in mode 1–7. After setting, use "auto mode" to run timing switch and then system will run the week timer of 1–7 modes. You can also set 1–7 modes within 1 day, use "auto mode" to run timing switch ON/OFF within one day. Be aware that when you use "auto mode", you need to make sure the settings of times does not overlap each other, otherwise the timer will not operate.

5) After entering the week timer setting, press the button for 3 seconds to exit week timer mode, then the timer symbol will be extinguished. You can check the 1–7 timer settings by pressing the "Setting" button. Example: press to display (1 ON "01:00" temperature 80°F), press again to display (1 OFF "02:00" temperature 80°F). Press the "Setting" button again to display (2 On "03:00" temperature 79°F) then press the Setting button to display (7 OFF "13:00" temperature 80°F). The wireless remote control and the appliance must be kept within 4 meters to prevent the remote control and the appliance from failing due to the distance exceeding the effective remote control range when working at the weekly timing. After the weekly time is turned on, the remote controller automatically controls the appliance at the set appointment time.

// 13.0 SAFETY CUT-OUT SYSTEM

This appliance has a non-self-resetting overheat protection device (thermal cut-out) which will activate if the air inlets or outlets are obstructed. For safety reasons the fire will NOT switch on again automatically.

The following procedure must be carried out before the fire can be operated again:

1) Switch OFF the appliance at the wall socket or outlet. Leave the fire OFF for a period of no less than 10 minutes, ensuring all obstructions are removed.

2) Switch the appliance to ON at the wall.

3) Ensure the appliance is turned ON at the ON/OFF switches.

NOTE: During the cut-out test the fire will automatically display '88'.

If the fire fails to operate correctly, repeat steps one and two. If an attempt to switch on the appliance is made before the safety cut-out has reset, the appliance may cut-out for a further period of time.

If the sequence has been followed correctly and the appliance still fails to function, check the fuse in the wall outlet. If this is not the cause, call an electrician or maintenance engineer.

NOTE: The flame-effect will remain operational if the cut-out is activated and only the fan heater is prevented from working.

© 2020 British Fires

// 14.0 CLEANING AND MAINTENANCE

Cleaning:

For general cleaning use a soft clean duster – never use harsh abrasive or cleaners. The glass panels should be cleaned carefully with a soft cloth. To clean the inside of the glass please refer to section 9.0.

Except for periodic cleaning of dust, there are no specific requirements for care, other than regular cleaning of the general appliance. A wipe with a dry cloth is normally sufficient. DO NOT use abrasive cleaners as they can damage the finish. Make sure the heater outlet and inlet grille (located on the top, front, centre of the appliance) is kept clear of dust, pet hair and other airborne household matter. These should be vacuum cleaned periodically using a brush attachment. The LED light strips are designed and tested to last 20,000 hours.

Handset Battery Replacement

Battery Requirements:

Two (2) AAA 1.5V

1) Remove the battery cover and the used batteries from the back of the remote control.

2) Insert the two replacement batteries the correct way into the battery holder—making sure the batteries are firmly seated.

3) Then insert the battery cover back into position.

4) You will then need to pair the remote to the appliance. Please refer to section 11.0 Pairing The Remote Control.

If in doubt consult a qualified electrician. Refer to Section 3.0 Appliance Data for fuse specification. Excluding fuses, use only genuine manufacturers spare parts available from your supplier.

// CAUTION:

Always disconnect the appliance from the mains supply outlet socket before undertaking any cleaning or maintenance!

// 15.0 TROUBLESHOOTING GUIDE

My Wall Inset Electric Fire...	Remedy
Is not switching on	Ensure mains switch is on. Replace the fuse in the plug.
Is not emitting any heat	The fire is fitted with an energy saving thermostat. If the temperature in the room is higher than the temperature selected on the fire, then the thermostat will stop the heater from turning on. For example, if the room temperature is 22°C or above and the fires heater is set at 22°C, then the heater will not be required until the room temperature drops below 22°C. If this is the case select a higher temperature setting than the room's temperature and the heater will begin to operate. The safety cut-out may have been operated. Switch the appliance off, leave for 10 minutes then switch back on.
Shuts off after a period of time	Check that the temperature is not set onto the lower settings. If the room is warm enough the thermostat will stop the fire switching the heat on. Check that the chimney/flue is blocked off. Check that the window detection sensor has not activated.
Display panel	When the display panel displays a red LED, which lights up the EE icon. When the thermostat fails, the display panel displays a blue LED, which lights up the 88 icon. When the window alarm occurs, the display panel displays orange and lights up the OP icon.

// WARNING:

Never connect live or neutral wires to the earth terminal of the plug.

NOTE: If a moulded plug is fitted and has to be removed take great care in disposing of the plug and severed cable, it must be destroyed to prevent engaging into a socket. Refer to Section 3.0, Appliance Data for fuse specification. Excluding fuses, use only genuine manufacturers spare parts available from your supplier.

© 2020 British Fires

// 16.0 APPLIANCE DIMENSIONS

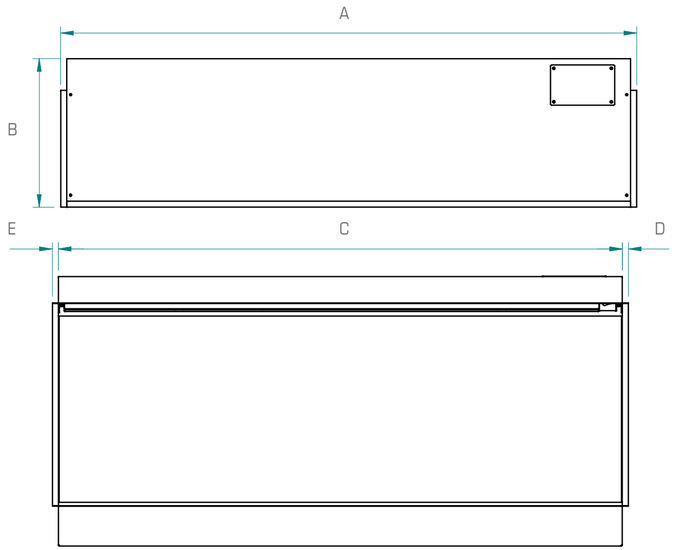

// APPLIANCE DIMENSIONS (in.)

A:	47.2 in	E:	0.5 in
B:	12.2 in	F:	11.7 in
C:	46.4 in	G:	16.7 in
D:	0.5 in	H:	22.1 in

// 17.0 GUARANTEE AND TERMS & CONDITIONS

AUTOMATIC 1-YEAR GUARANTEE

We offer a standard one-year guarantee on every electric appliance.

FREE 3-YEAR GUARANTEE WITH REGISTRATION

At British Fires we pride ourselves on quality and performance, so much so that each of our appliances is eligible for a **three-year guarantee** when purchased from an authorised dealer. To cover your appliance for a further two years, free registration is required on our website www.britishfires.com/guarantee. Full warranty terms and conditions are available to view at www.britishfires.com.

TERMS & CONDITIONS

All appliances must be installed in a correctly ventilated space in accordance with the manufacturer's installation instructions and the rules in force. This brochure is for guidance only and is not intended to replace the installation manual, which provides more detailed information. All of our fires carry CE Approval. April 2019. British Fires™

1) For any claim to be made within three years from date of purchase you will be required to provide and supply your original proof of purchase.

2) All appliances must have been installed and operated in accordance with the manufacturer's instructions.

3) Purchase(s) must be made through an authorised stockist/retailer.

Please note all consumable items such as any ceramics including; coals, pebbles, logs, bark, crystals, rear panels are not covered by the 3-year guarantee.

During the guarantee period any appliance or component which is proved to be faulty or defective in manufacture, will be repaired or replaced free of material and labour charges, providing that we have authorised or carried out the repair or replacement.

We will not accept or reimburse the costs of any third-party who undertakes any work carried on the appliance or fits parts, unless we have approved such work in advance of it being carried out.

The guarantee period will not be extended even if we repair or replace any appliance or part.

Making a claim:

If you wish to make a claim under our guarantee and all the terms and conditions for your appliance have been met then please submit the following information for the attention of the Service Department to the address below.

Alternatively, you can email or fax. British Fires, Service Department, Reid Street, Christchurch, Dorset, BH23 2BT.

Email: Guarantee@britishfires.co.uk Fax: 01202 588639.

Details required:

1) Name, full address including postal code and contact telephone number.

2) A copy of your proof of purchase (e.g. receipt or bank statement). Please note that this does not affect your statutory rights.

Waste electrical appliances should not be disposed of with household waste. Please recycle where facilities exist. Check with your local authority or retailer for recycling advice.

As our policy is one of continuous improvement and development, we therefore, hope that you will understand we must retain the right to amend details and/or specifications without prior notice.

© 2020 British Fires

// NOTES

© 2020 British Fires

// NOTES

© 2020 British Fires

BRITISH FIRES

This appliance is only suitable for well insulated spaces or occasional use. Please note: Except where otherwise stated, all rights, including copyright in the text, images and layout of this booklet is owned by British Fires. You are not permitted to copy or adapt any of the content without the prior written permission of British Fires. © 2020 British Fires

Models covered by these instructions:
New Forest Electric Fire (EF40-48B)

US Patent Application No. US 16/710.568

All instructions must be handed to the user for safekeeping.

Revision A – 05/2020

British Fires
Christchurch, Dorset
BH23 2BT
T: 0808 169 9911
W: www.britishfires.com
E: sales@ britishfires.com