FCC Radio Test Report

FCC ID: *2AVAA-XN002*

Original Grant

Report No.	:	TB-FCC174643
Applicant	:	Shenzhen Double New Technology Co.,Ltd
Equipment Under Test (EUT)		
EUT Name	:	Micro laser engraving machine
Model No.	:	XN002
Serial Model No.	:	XN003,XN004,XN005,XN006,XN007,XN008
Brand Name	:	----
Sample ID	:	TBBJ-20200720-15-1#
Receipt Date	:	2020-08-06
Test Date	:	2020-08-06 to 2020-08-19
Issue Date	:	2020-08-20
Standards	:	FCC Part 15, Subpart C 15.247
Test Method	:	ANSI C63.10: 2013
Conclusions	:	**PASS**
		In the configuration tested, the EUT complied with the standards specified above,
Test/Witness Engineer	:	Jack Deng
Engineer Supervisor	:	Ivan Su
Engineer Manager	:	Ray Lai

This report details the results of the testing carried out on one sample. The results contained in this test report do not relate to other samples of the same product. The manufacturer should ensure that all products in series production are in conformity with the product sample detailed in the report.

Contents

CONTENTS **2**
1. GENERAL INFORMATION ABOUT EUT **5**
1.1 Client Information 5
1.2 General Description of EUT (Equipment Under Test) 5
1.3 Block Diagram Showing the Configuration of System Tested 6
1.4 Description of Support Units 7
1.6 Description of Test Software Setting 8
1.7 Measurement Uncertainty 8
1.8 Test Facility 9
2. TEST SUMMARY **10**
3. TEST SOFTWARE **10**
4. TEST EQUIPMENT **11**
5. CONDUCTED EMISSION TEST **12**
5.1 Test Standard and Limit 12
5.2 Test Setup 12
5.3 Test Procedure 13
5.4 Deviation From Test Standard 13
5.5 EUT Operating Mode 13
5.6 Test Data 13
6. RADIATED EMISSION TEST **14**
6.1 Test Standard and Limit 14
6.2 Test Setup 15
6.3 Test Procedure 16
6.4 Deviation From Test Standard 17
6.5 EUT Operating Condition 17
6.6 Test Data 17
7. RESTRICTED BANDS REQUIREMENT **18**
7.1 Test Standard and Limit 18
7.2 Test Setup 18
7.3 Test Procedure 18
7.4 Deviation From Test Standard 19
7.5 EUT Operating Condition 19
7.6 Test Data 19
8. BANDWIDTH TEST **20**
8.1 Test Standard and Limit 20
8.2 Test Setup 20
8.3 Test Procedure 20
8.4 Deviation From Test Standard 20
8.5 EUT Operating Condition 20

8.6 Test Data 20
9. PEAK OUTPUT POWER TEST 21
9.1 Test Standard and Limit 21
9.2 Test Setup 21
9.3 Test Procedure 21
9.4 Deviation From Test Standard 21
9.5 EUT Operating Condition 21
9.6 Test Data 21
10. POWER SPECTRAL DENSITY TEST 22
10.1 Test Standard and Limit 22
10.2 Test Setup 22
10.3 Test Procedure 22
10.4 Deviation From Test Standard 22
10.5 EUT Operating Condition 22
10.6 Test Data 22
11. ANTENNA REQUIREMENT 23
11.1 Standard Requirement 23
11.2 Deviation From Test Standard 23
11.3 Antenna Connected Construction 23
11.4 Result 23
ATTACHMENT A-- CONDUCTED EMISSION TEST DATA 24
ATTACHMENT B-- RADIATED EMISSION TEST DATA 26
ATTACHMENT C-- PEAK OUTPUT POWER TEST DATA 31

Revision History

Report No.	Version	Description	Issued Date
TB-FCC170183	Rev.01	Initial issue of report	2019-12-03
TB-FCC174643	Rev.02	Class II Permissive Change	2020-08-20

1. General Information about EUT

1.1 Client Information

Applicant	:	Shenzhen Double New Technology Co.,Ltd
Address	:	301B, No.13, phase I, zone 3, Xinhe community, Fuhai street, Bao'an District, Shenzhen, China
Manufacturer	:	Shenzhen Double New Technology Co.,Ltd
Address	:	301B, No.13, phase I, zone 3, Xinhe community, Fuhai street, Bao'an District, Shenzhen, China

1.2 General Description of EUT (Equipment Under Test)

EUT Name	:	Micro laser engraving machine	
Models No.	:	XN002,XN003,XN004,XN005,XN006,XN007,XN008	
Model Different	:	All these models are in the same PCB, layout and electrical circuit, the only difference is color.	
Product Description	:	Operation Frequency:	Bluetooth 4.1(BLE): 2402MHz~2480MHz
		Number of Channel:	Bluetooth 4.1(BLE): 40 channels **see note(3)**
		RF Output Power:	BLE: -2.548dBm (Max)
		Antenna Gain:	1.5dBi PCB Antenna
		Modulation Type:	GFSK
		Bit Rate of Transmitter:	1Mbps(GFSK)
Power Supply	:	DC Voltage Supply from AC/DC Adapter.	
Power Rating	:	AC/DC Adapter : MA24W1-1202000U Input: 100~240V/50~60Hz 0.7A Output: 12V 2A	
Software Version	:	V1.0	
Hardware Version	:	V1.8	
Connecting I/OPort(S)	:	Please refer to the User's Manual	
Remark	:	The antenna gain provided by the applicant, the verified for the RF conduction test provided by TOBY test lab.	

Note:

This Test Report is FCC Part 15.247 for Bluetooth BLE, the test procedure follows the FCC KDB 558074 D01 DTS Means Guidance v05.

(1) For a more detailed features description, please refer to the manufacturer's specifications or the User's Manual.

(2) Antenna information provided by the applicant.

(3) Channel List:

Channel	Frequency (MHz)	Channel	Frequency (MHz)	Channel	Frequency (MHz)
00	2402	14	2430	28	2458
01	2404	15	2432	29	2460
02	2406	16	2434	30	2462
03	2408	17	2436	31	2464
04	2410	18	2438	32	2466
05	2412	19	2440	33	2468
06	2414	20	2442	34	2470
07	2416	21	2444	35	2472
08	2418	22	2446	36	2474
09	2420	23	2448	37	2476
10	2422	24	2450	38	2478
11	2424	25	2452	39	2480
12	2426	26	2454		
13	2428	27	2456		

1.3 Block Diagram Showing the Configuration of System Tested

Conducted Test

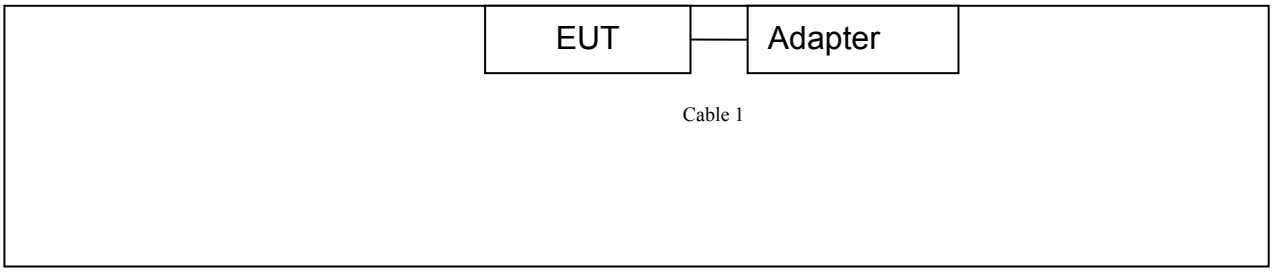

1.4 Description of Support Units

Equipment Information				
Name	**Model**	**FCC ID/VOC**	**Manufacturer**	**Used "√"**
----	----	----	----	----
Cable Information				
Number	**Shielded Type**	**Ferrite Core**	**Length**	**Note**
----	----	----	----	----

1.5 Description of Test Mode

To investigate the maximum EMI emission characteristics generates from EUT, the test system was pre-scanning tested base on the consideration of following EUT operation mode or test configuration mode which possible have effect on EMI emission level. Each of these EUT operation mode(s) or test configuration mode(s) mentioned follow was evaluated respectively.

For Conducted Test	
Final Test Mode	**Description**
Mode 1	Adapter + TX Mode

For Radiated Test	
Final Test Mode	**Description**
Mode 2	Adapter + TX 1Mbps Mode (Channel 00/20/39)

Note:

(1) For all test, we have verified the construction and function in typical operation. And all the test modes were carried out with the EUT in transmitting operation in maximum power with all kinds of data rate.
According to ANSI C63.10 standards, the measurements are performed at the highest, middle, lowest available channels, and the worst case data rate as follows:
BLE Mode: GFSK Modulation Transmitting mode.

(2) During the testing procedure, the continuously transmitting with the maximum power mode was programmed by the customer.

(3) The EUT is considered a portable unit; in normal use it was positioned on X-plane. The worst case was found positioned on X-plane. Therefore only the test data of this X-plane was used for radiated emission measurement test.

1.6 Description of Test Software Setting

During testing channel& Power controlling software provided by the customer was used to control the operating channel as well as the output power level. The RF output power selection is for the setting of RF output power expected by the customer and is going to be fixed on the firmware of the final end product power parameters of RF setting.

Test Software Version	**LaunchEngmode**		
Frequency	2402 MHz	2442MHz	2480 MHz
BLE GFSK	DEF	DEF	DEF

1.7 Measurement Uncertainty

The reported uncertainty of measurement y ± U，where expended uncertainty U is based on a standard uncertainty multiplied by a coverage factor of k=2，providing a level of confidence of approximately 95 %.

Test Item	**Parameters**	**Expanded Uncertainty (U_{Lab})**
Conducted Emission	Level Accuracy: 9kHz~150kHz 150kHz to 30MHz	±3.50 dB ±3.10 dB
Radiated Emission	Level Accuracy: 9kHz to 30 MHz	±4.60 dB
Radiated Emission	Level Accuracy: 30MHz to 1000 MHz	±4.50 dB
Radiated Emission	Level Accuracy: Above 1000MHz	±4.20 dB

1.8 Test Facility

The testing was performed by the Shenzhen Toby Technology Co., Ltd., in their facilities located at:1A/F., Bldg.6, Yusheng Industrial Zone, The National Road No.107 Xixiang Section 467, Xixiang, Bao'an, Shenzhen, Guangdong, China.
At the time of testing, the following bodies accredited the Laboratory:

CNAS (L5813)
The Laboratory has been accredited by CNAS to ISO/IEC 17025: 2005 General Requirements for the Competence of Testing and Calibration Laboratories for the competence in the field of testing. And the Registration No.: CNAS L5813.

A2LA Certificate No.: 4750.01
The laboratory has been accredited by American Association for Laboratory Accreditation(A2LA) to ISO/IEC 17025：2005 General Requirements for the Competence of Testing and Calibration Laboratories for the technical competence in the field of Electrical Testing. And the A2LA Certificate No.: 4750.01. FCC Accredited Test Site Number: 854351.

IC Registration No.: (11950A)
The Laboratory has been registered by Certification and Engineering Bureau of Industry Canada for radio equipment testing. The site registration: Site# 11950A.

2. Test Summary

FCC Part 15 Subpart C(15.247)/RSS 247 Issue 2					
Standard Section		Test Item	Test Sample(s)	Judgment	Remark
FCC	IC				
15.203		Antenna Requirement	TBBJ-20200720-15-1#	PASS	N/A
15.207(a)	RSS-GEN 7.2.4	Conducted Emission	TBBJ-20200720-15-1#	PASS	N/A
15.247(b)(3)	RSS 247 5.4 (4)	Conducted Max Output Power	TBBJ-20200720-15-1#	PASS	N/A
15.205, 15.209&15.247(d)	RSS 247 5.5	Transmitter Radiated Spurious &Unwanted Emissions into Restricted Frequency	TBBJ-20200720-15-1#	PASS	N/A
Note: N/A is an abbreviation for Not Applicable.					

3. Test Software

Test Item	Test Software	Manufacturer	Version No.
Conducted Emission	EZ-EMC	EZ	CDI-03A2
Radiation Emission	EZ-EMC	EZ	FA-03A2RE

4. Test Equipment

Conducted Emission Test					
Equipment	**Manufacturer**	**Model No.**	**Serial No.**	**Last Cal.**	**Cal. Due Date**
EMI Test Receiver	Rohde & Schwarz	ESCI	100321	Jul. 12, 2020	Jul. 11, 2021
RF Switching Unit	Compliance Direction Systems Inc	RSU-A4	34403	Jul. 12, 2020	Jul. 11, 2021
AMN	SCHWARZBECK	NNBL 8226-2	8226-2/164	Jul. 12, 2020	Jul. 11, 2021
LISN	Rohde & Schwarz	ENV216	101131	Jul. 12, 2020	Jul. 11, 2021
Radiation Emission Test					
Equipment	**Manufacturer**	**Model No.**	**Serial No.**	**Last Cal.**	**Cal. Due Date**
Spectrum Analyzer	Agilent	E4407B	MY45106456	Jul. 12, 2020	Jul. 11, 2021
EMI Test Receiver	Rohde & Schwarz	ESPI	100010/007	Jul. 12, 2020	Jul. 11, 2021
Spectrum Analyzer	Rohde & Schwarz	FSV40-N	102197	Jul. 06, 2020	Jul. 05, 2021
Bilog Antenna	ETS-LINDGREN	3142E	00117537	Mar.01, 2020	Feb. 28, 2021
Horn Antenna	ETS-LINDGREN	3117	00143209	Mar.01, 2020	Feb. 28, 2021
Horn Antenna	ETS-LINDGREN	BBHA 9170	BBHA9170582	Aug.07, 2020	Aug. 06, 2021
Loop Antenna	SCHWARZBECK	FMZB 1519 B	1519B-059	Jul. 07, 2020	Jul. 06, 2021
Pre-amplifier	Sonoma	310N	185903	Mar.01, 2020	Feb. 28, 2021
Pre-amplifier	HP	8449B	3008A00849	Mar.01, 2020	Feb. 28, 2021
Pre-amplifier	SKET	LNPA_1840G-50	SK201904032	Jul. 27, 2020	Jul. 26, 2021
Cable	HUBER+SUHNER	100	SUCOFLEX	Mar. 07, 2020	Mar. 06, 2021
Positioning Controller	ETS-LINDGREN	2090	N/A	N/A	N/A
Antenna Conducted Emission					
Equipment	**Manufacturer**	**Model No.**	**Serial No.**	**Last Cal.**	**Cal. Due Date**
Spectrum Analyzer	Agilent	E4407B	MY45106456	Jul. 12, 2020	Jul. 11, 2021
Spectrum Analyzer	Rohde & Schwarz	ESCI	100010/007	Jul. 12, 2020	Jul. 11, 2021
MXA Signal Analyzer	Agilent	N9020A	MY49100060	Sep. 16, 2019	Sep. 15, 2020
Vector Signal Generator	Agilent	N5182A	MY50141294	Sep. 16, 2019	Sep. 15, 2020
Analog Signal Generator	Agilent	N5181A	MY50141953	Sep. 16, 2019	Sep. 15, 2020
RF Power Sensor	DARE!! Instruments	RadiPowerRPR3006W	17I00015SNO26	Sep. 16, 2019	Sep. 15, 2020
	DARE!! Instruments	RadiPowerRPR3006W	17I00015SNO29	Sep. 16, 2019	Sep. 15, 2020
	DARE!! Instruments	RadiPowerRPR3006W	17I00015SNO31	Sep. 16, 2019	Sep. 15, 2020
	DARE!! Instruments	RadiPowerRPR3006W	17I00015SNO33	Sep. 16, 2019	Sep. 15, 2020

5. Conducted Emission Test

5.1 Test Standard and Limit

5.1.1Test Standard

FCC Part 15.207

5.1.2 Test Limit

Conducted Emission Test Limit

Frequency	Maximum RF Line Voltage (dBμV)	
	Quasi-peak Level	Average Level
150kHz~500kHz	66 ~ 56 *	56 ~ 46 *
500kHz~5MHz	56	46
5MHz~30MHz	60	50

Notes:
(1) *Decreasing linearly with logarithm of the frequency.
(2) The lower limit shall apply at the transition frequencies.
(3) The limit decrease in line with the logarithm of the frequency in the range of 0.15 to 0.50MHz.

5.2 Test Setup

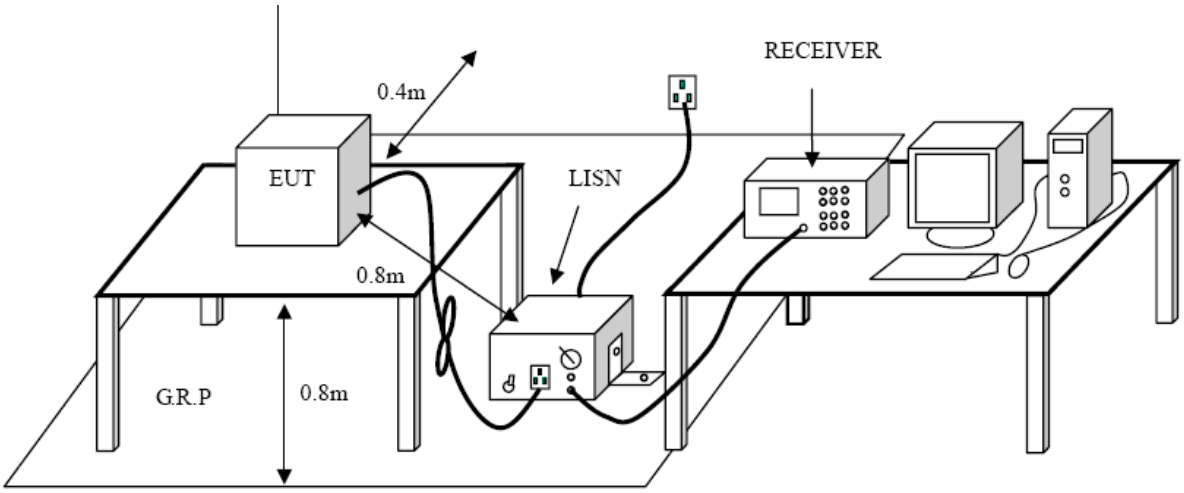

5.3 Test Procedure

The EUT was placed 0.8 meters from the horizontal ground plane with EUT being connected to the power mains through a line impedance stabilization network (LISN). All other support equipments powered from additional LISN(s). The LISN provide 50 Ohm/ 50uH of coupling impedance for the measuring instrument.

Interconnecting cables that hang closer than 40 cm to the ground plane shall be folded back and forth in the center forming a bundle 30 to 40 cm long.

I/O cables that are not connected to a peripheral shall be bundled in the center. The end of the cable may be terminated, if required, using the correct terminating impedance. The overall length shall not exceed 1 m.

LISN at least 80 cm from nearest part of EUT chassis.

The bandwidth of EMI test receiver is set at 9 kHz, and the test frequency band is from 0.15MHz to 30MHz.

5.4 Deviation From Test Standard

No deviation

5.5 EUT Operating Mode

Please refer to the description of test mode.

5.6 Test Data

Please refer to the Attachment A.

6. Radiated Emission Test

6.1 Test Standard and Limit

6.1.1 Test Standard

FCC Part 15.247(d)

6.1.2 Test Limit

Radiated Emission Limits (9kHz~1000MHz)

Frequency (MHz	Field Strength (microvolt/meter)	Measurement Distance (meters)
0.009~0.490	2400/F(KHz)	300
0.490~1.705	24000/F(KHz)	30
1.705~30.0	30	30
30~88	100	3
88~216	150	3
216~960	200	3
Above 960	500	3

Radiated Emission Limit (Above 1000MHz)

Frequency (MHz)	Distance Meters(at 3m)	
	Peak (dBuV/m)	Average (dBuV/m)
Above 1000	74	54

Note:

(1) The tighter limit applies at the band edges.

(2) Emission Level (dBuV/m)=20log Emission Level (uV/m)

6.2 Test Setup

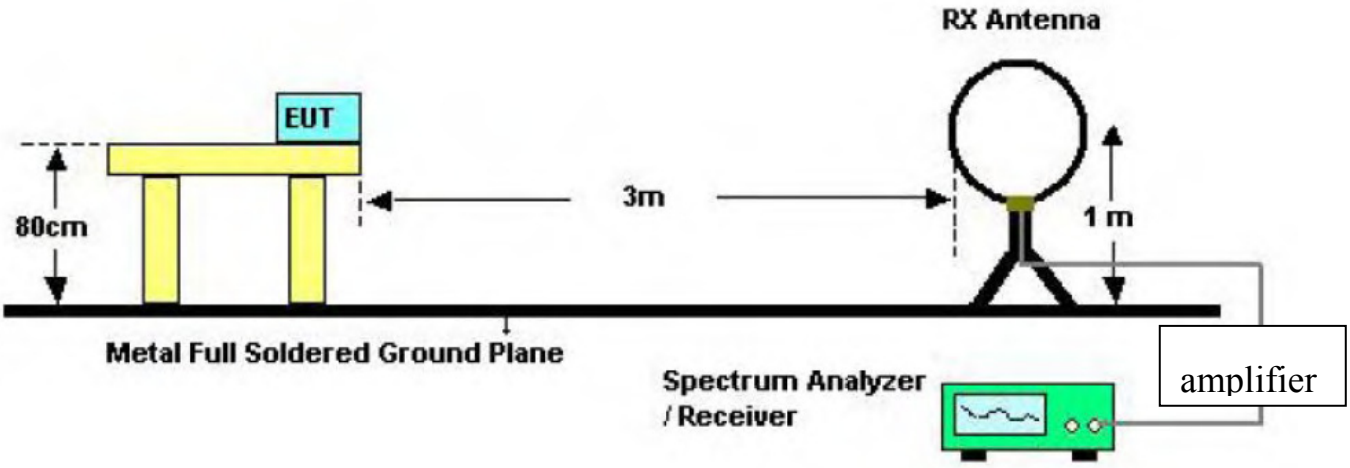

Below 30MHz Test Setup

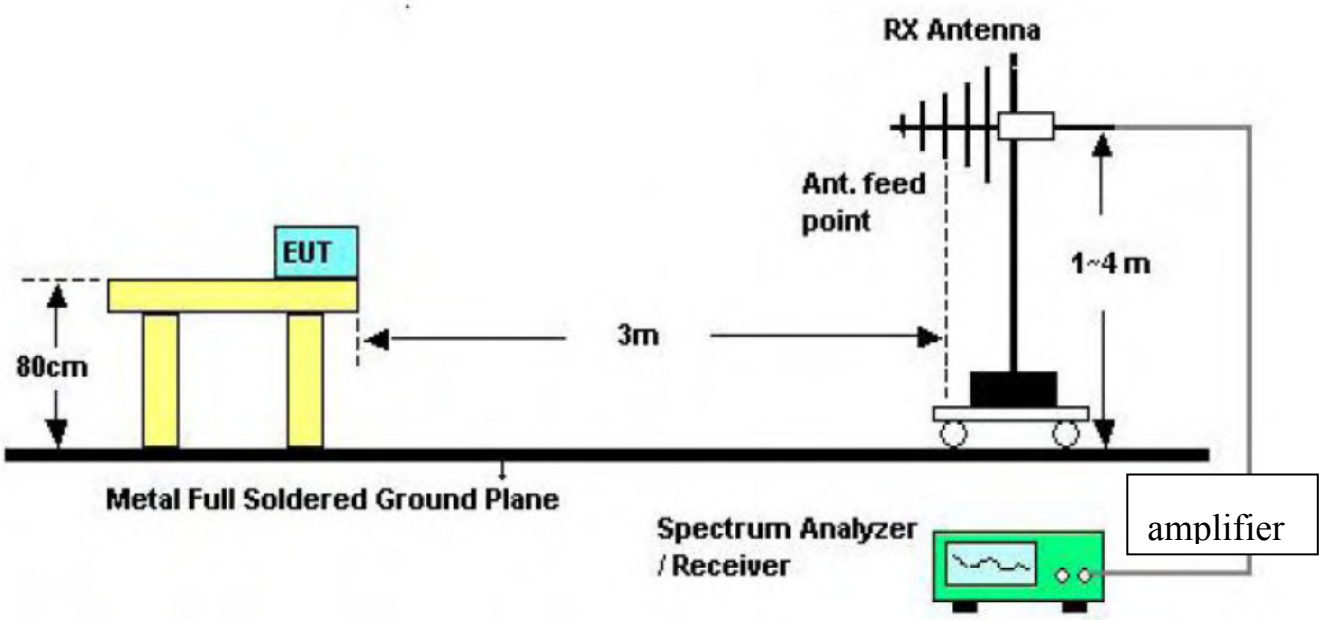

Below 1000MHz Test Setup

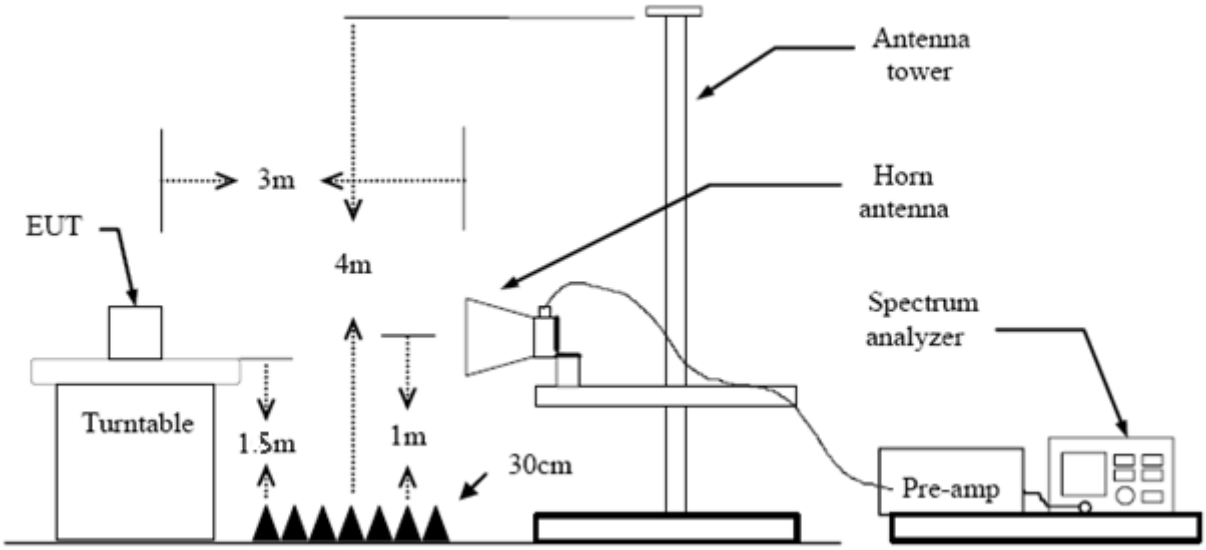

Above 1GHz Test Setup

6.3 Test Procedure

(1) The measuring distance of 3m shall be used for measurements at frequency up to 1GHz and above 1 GHz. The EUT was placed on a rotating 0.8m high above ground, the table was rotated 360 degrees to determine the position of the highest radiation.

(2) Measurements at frequency above 1GHz. The EUT was placed on a rotating 1.5m high above the ground. RF absorbers covered the ground plane with a minimum area of 3.0m by 3.0m between the EUT and measurement receiver antenna. The RF absorber shall not exceed 30cm in high above the conducting floor. The table was rotated 360 degrees to determine the position of the highest radiation.

(3) The Test antenna shall vary between 1m and 4m, Both Horizontal and Vertical antenna are set to make measurement.

(4) The initial step in collecting conducted emission data is a spectrum analyzer peak detector mode pre-scanning the measurement frequency range. Significant peaks are then marked and then Quasi Peak detector mode re-measured.

(5) If the Peak Mode measured value compliance with and lower than Quasi Peak Mode Limit Bellow 1 GHz, the EUT shall be deemed to meet QP Limits and then no additional QP Mode measurement performed. But the Peak Value and average value both need to comply with applicable limit above 1 GHz.

(6) Testing frequency range below 1GHz the measuring instrument use VBW=120 kHz with Quasi-peak detection.

(7) Testing frequency range above 1GHz the measuring instrument use RBW=1 MHz and VBW=3 MHz with Peak Detector for Peak Values, and use RBW=1 MHz and VBW=10 Hz with Peak Detector for Average Values.

(8) For the actual test configuration, please see the test setup photo.

6.4 Deviation From Test Standard

No deviation

6.5 EUT Operating Condition

The Equipment Under Test was set to Continual Transmitting in maximum power.

6.6 Test Data

Remark: During testing above 1GHz the measuring instrument use RBW=1 MHz and VBW=3 MHz with Peak Detector for Peak Values, and use RBW=1 MHz and VBW=10 Hz with Peak Detector for Average Values.

Please refer to the Attachment B.

7. Restricted Bands Requirement

7.1 Test Standard and Limit

7.1.1 Test Standard

FCC Part 15.247(d) FCC Part 15.205

7.1.2 Test Limit

Restricted Frequency Band (MHz)	Distance Meters(at 3m)	
	Peak (dBuV/m)	Average (dBuV/m)
2310 ~2390	74	54
2483.5 ~2500	74	54

7.2 Test Setup

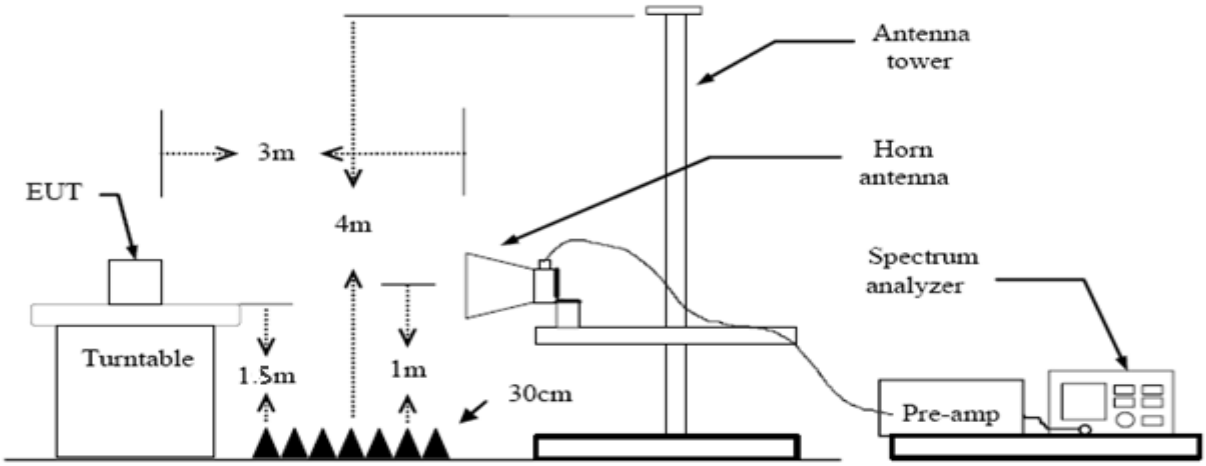

7.3 Test Procedure

(1) The measuring distance of 3m shall be used for measurements at frequency up to 1GHz and above 1 GHz. The EUT was placed on a rotating 0.8m high above ground, the table was rotated 360 degrees to determine the position of the highest radiation.

(2) Measurements at frequency above 1GHz. The EUT was placed on a rotating 1.5m high above the ground. RF absorbers covered the ground plane with a minimum area of 3.0m by 3.0m between the EUT and measurement receiver antenna. The RF absorber shall not exceed 30cm in high above the conducting floor. The table was rotated 360 degrees to determine the position of the highest radiation.

(3) The Test antenna shall vary between 1m and 4m, Both Horizontal and Vertical antenna are set to make measurement.

(4) The initial step in collecting conducted emission data is a spectrum analyzer peak detector

mode pre-scanning the measurement frequency range. Significant peaks are then marked and then Quasi Peak detector mode re-measured.

(5) If the Peak Mode measured value compliance with and lower than Quasi Peak Mode Limit Bellow 1 GHz, the EUT shall be deemed to meet QP Limits and then no additional QP Mode measurement performed. But the Peak Value and average value both need to comply with applicable limit above 1 GHz.

(6) Testing frequency range below 1GHz the measuring instrument use VBW=120 kHz with Quasi-peak detection.

(7) Testing frequency range above 1GHz the measuring instrument use RBW=1 MHz and VBW=3 MHz with Peak Detector for Peak Values, and use RBW=1 MHz and VBW=10 Hz with Peak Detector for Average Values.

(8) For the actual test configuration, please see the test setup photo.

7.4 Deviation From Test Standard

No deviation

7.5 EUT Operating Condition

The Equipment Under Test was set to Continual Transmitting in maximum power.

7.6 Test Data

N/A

8. Bandwidth Test

8.1 Test Standard and Limit

8.1.1 Test Standard

FCC Part 15.247 (a)(2)

8.1.2 Test Limit

FCC Part 15 Subpart C(15.247)/RSS-247		
Test Item	**Limit**	**Frequency Range(MHz)**
Bandwidth	>=500 KHz (6dB bandwidth)	2400~2483.5

8.2 Test Setup

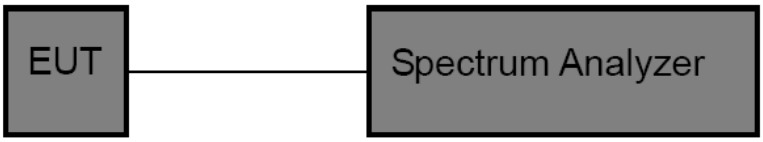

8.3 Test Procedure

(1) The EUT was directly connected to the spectrum analyzer and antenna output port as show in the block diagram above.

(2) The bandwidth is measured at an amplitude level reduced 6dB from the reference level. The reference level is the level of the highest amplitude signal observed from the transmitter at the fundamental frequency. Once the reference level is established, the equipment is conditioned with typical modulating signal to produce the worst –case (i.e the widest) bandwidth.

(3)Measure the channel separation the spectrum analyzer was set to Resolution Bandwidth:100 kHz, and Video Bandwidth:300 kHz, Detector: Peak, Sweep Time set auto.

8.4 Deviation From Test Standard

No deviation

8.5 EUT Operating Condition

The EUT was set to continuously transmitting in each mode and low, middle and high channel for the test.

8.6 Test Data

N/A

9. Peak Output Power Test

9.1 Test Standard and Limit

9.1.1 Test Standard

FCC Part 15.247 (b)(3)

9.1.2 Test Limit

FCC Part 15 Subpart C(15.247)/RSS-247		
Test Item	**Limit**	**Frequency Range(MHz)**
Peak Output Power	1 Watt or 30 dBm	2400~2483.5

9.2 Test Setup

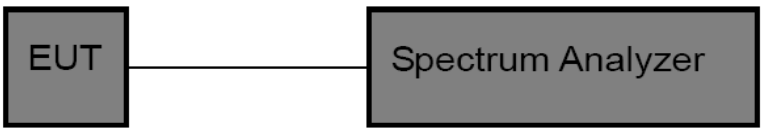

9.3 Test Procedure

The EUT was directly connected to the Spectrum Analyzer and antenna output port as show in the block diagram above. The measurement is according to section 9.1.1 of KDB 558074 D01 DTS Meas Guidance v05.

(1) Set the RBW⩾DTS Bandwidth
(2) Set VBW⩾3*RBW
(3) Set Span⩾3*RBW
(4) Sweep time=auto
(5) Detector= peak
(6) Trace mode= max hold.
(7) Allow trace to fully stabilize, and then use peak marker function to determine the peak amplitude level.

9.4 Deviation From Test Standard

No deviation

9.5 EUT Operating Condition

The EUT was set to continuously transmitting in the max power during the test.

9.6 Test Data

Please refer to the Attachment C.

10. Power Spectral Density Test

10.1 Test Standard and Limit

10.1.1 Test Standard

FCC Part 15.247 (e)

10.1.2 Test Limit

FCC Part 15 Subpart C(15.247)		
Test Item	**Limit**	**Frequency Range(MHz)**
Power Spectral Density	8dBm(in any 3 kHz)	2400~2483.5

10.2 Test Setup

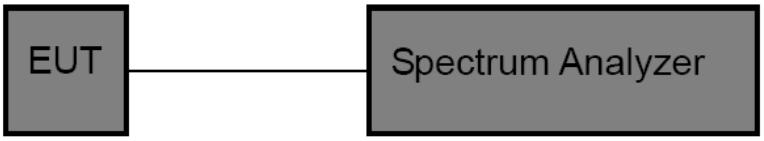

10.3 Test Procedure

The EUT was directly connected to the Spectrum Analyzer and antenna output port as show in the block diagram above. The measurement according to section 10.2 of KDB 558074 D01 DTS Meas Guidance v05.

(1) The EUT was directly connected to the spectrum analyzer and antenna output port as show in the block diagram above.
(2) Set analyser centre frequency to DTS channel centre frequency.
(3) Set the span to 1.5 times the DTS bandwidth.
(4) Set the RBW to: 3 kHz
(5) Set the VBW to: 10 kHz
(6) Detector: peak
(7) Sweep time: auto
(8) Allow trace to fully stabilize. Then use the peak marker function to determine the maximum amplitude level.

10.4 Deviation From Test Standard

No deviation

10.5 EUT Operating Condition

The EUT was set to continuously transmitting in each mode and low, Middle and high channel for the test.

10.6 Test Data

N/A

11. Antenna Requirement

11.1 Standard Requirement

11.1.1 Standard

FCC Part 15.203

11.1.2 Requirement

An intentional radiator shall be designed to ensure that no antenna other than that furnished by the responsible party shall be used with the device. The use of a permanently attached antenna or of an antenna that uses a unique coupling to the intentional radiator shall be considered sufficient to comply with the provisions of this Section. The manufacturer may design the unit so that a broken antenna can be replaced by the user, but the use of a standard antenna jack or electrical connector is prohibited.

11.2 Deviation From Test Standard

No deviation

11.3 Antenna Connected Construction

The gains of the antenna used for transmitting is 1.5dBi, and the antenna de-signed with permanent attachment and no consideration of replacement. Please see the EUT photo for details.

11.4 Result

The EUT antenna is a PCB Antenna. It complies with the standard requirement.

Antenna Type
☒Permanent attached antenna
☐Unique connector antenna
☐Professional installation antenna

Attachment A-- Conducted Emission Test Data

Temperature:	25℃	**Relative Humidity:**	55%
Test Voltage:	AC 120V 60Hz		
Terminal:	Line		
Test Mode:	Mode 1		
Remark:	Only worse case is reported		

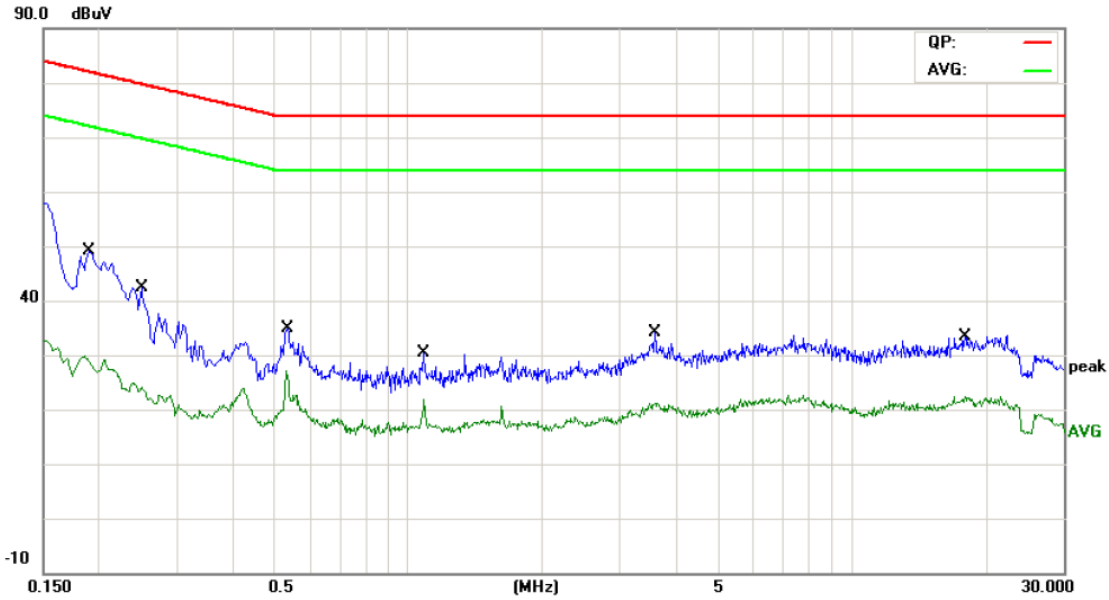

No.	Mk.	Freq.	Reading Level	Correct Factor	Measure-ment	Limit	Over	
		MHz	dBuV	dB	dBuV	dBuV	dB	Detector
1		0.1900	29.44	9.70	39.14	82.03	-42.89	QP
2		0.1900	18.04	9.70	27.74	72.03	-44.29	AVG
3		0.2500	21.24	9.70	30.94	79.75	-48.81	QP
4		0.2500	10.86	9.70	20.56	69.75	-49.19	AVG
5		0.5340	20.04	9.70	29.74	74.00	-44.26	QP
6	*	0.5340	11.89	9.70	21.59	64.00	-42.41	AVG
7		1.0820	11.14	9.79	20.93	74.00	-53.07	QP
8		1.0820	6.53	9.79	16.32	64.00	-47.68	AVG
9		3.5860	16.54	9.90	26.44	74.00	-47.56	QP
10		3.5860	10.29	9.90	20.19	64.00	-43.81	AVG
11		17.9980	16.75	10.00	26.75	74.00	-47.25	QP
12		17.9980	9.61	10.00	19.61	64.00	-44.39	AVG

Emission Level= Read Level+ Correct Factor

Temperature:	25℃	**Relative Humidity:**	55%
Test Voltage:	AC 120V 60Hz		
Terminal:	Neutral		
Test Mode:	Mode 1		
Remark:	Only worse case is reported		

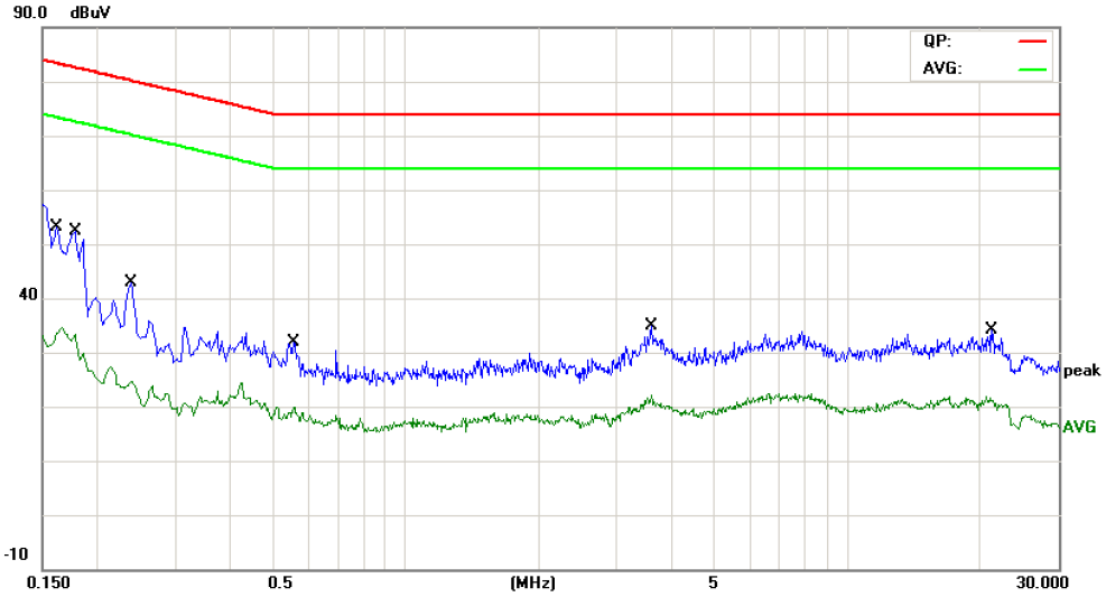

No.	Mk.	Freq.	Reading Level	Correct Factor	Measure-ment	Limit	Over	
		MHz	dBuV	dB	dBuV	dBuV	dB	Detector
1		0.1620	33.91	9.70	43.61	83.36	-39.75	QP
2		0.1620	21.81	9.70	31.51	73.36	-41.85	AVG
3	*	0.1780	33.41	9.70	43.11	82.57	-39.46	QP
4		0.1780	17.43	9.70	27.13	72.57	-45.44	AVG
5		0.2380	25.92	9.70	35.62	80.16	-44.54	QP
6		0.2380	12.85	9.70	22.55	70.16	-47.61	AVG
7		0.5580	20.50	9.70	30.20	74.00	-43.80	QP
8		0.5580	14.13	9.70	23.83	64.00	-40.17	AVG
9		3.5980	17.07	9.90	26.97	74.00	-47.03	QP
10		3.5980	10.40	9.90	20.30	64.00	-43.70	AVG
11		21.1860	15.76	10.03	25.79	74.00	-48.21	QP
12		21.1860	9.58	10.03	19.61	64.00	-44.39	AVG

Emission Level= Read Level+ Correct Factor

Attachment B-- Radiated Emission Test Data

9 KHz~30 MHz

From 9 KHz to 30 MHz: Conclusion: PASS

Note: The amplitude of spurious emissions which are attenuated by more than 20dB Below the permissible value has no need to be reported.

30MHz~1GHz

Temperature:	25℃	**Relative Humidity:**	55%
Test Voltage:	AC 120V 60Hz		
Ant. Pol.	Horizontal		
Test Mode:	Mode 2 2402MHz (1Mbps)		
Remark:	Only worse case is reported		

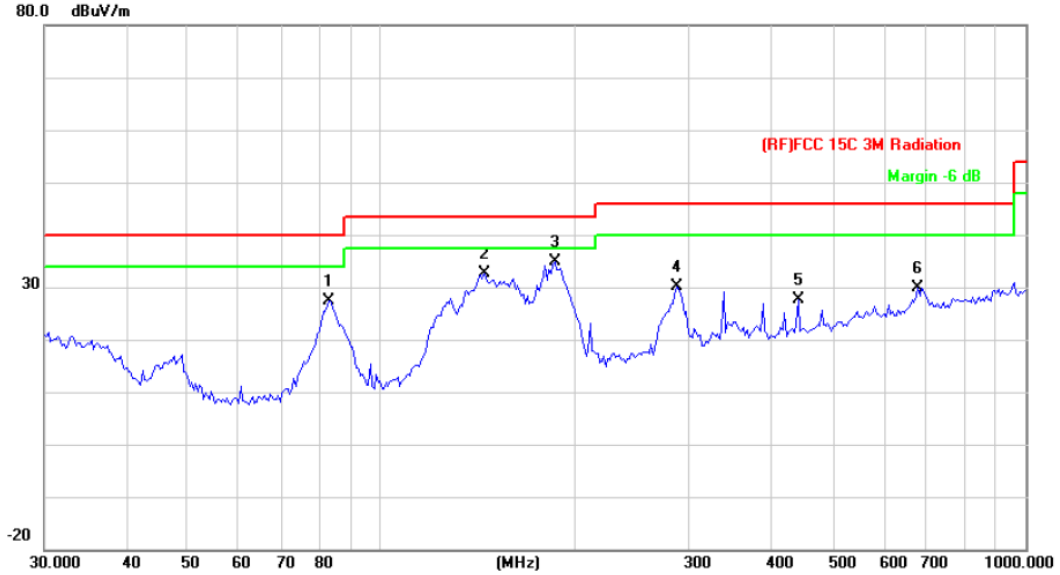

No.	Mk.	Freq.	Reading Level	Correct Factor	Measure-ment	Limit	Over	
		MHz	dBuV	dB/m	dBuV/m	dBuV/m	dB	Detector
1		82.9385	49.60	-22.29	27.31	40.00	-12.69	QP
2		144.3348	54.59	-21.93	32.66	43.50	-10.84	QP
3	*	185.7882	54.94	-19.94	35.00	43.50	-8.50	QP
4		286.9823	46.59	-16.54	30.05	46.00	-15.95	QP
5		443.2943	39.51	-11.99	27.52	46.00	-18.48	QP
6		679.9600	37.15	-7.25	29.90	46.00	-16.10	QP

*:Maximum data x:Over limit !:over margin

Emission Level= Read Level+ Correct Factor

Temperature:	25℃	**Relative Humidity:**	55%
Test Voltage:	AC 120V 60Hz		
Ant. Pol.	Vertical		
Test Mode:	Mode 2 2402MHz (1Mbps)		
Remark:	Only worse case is reported		

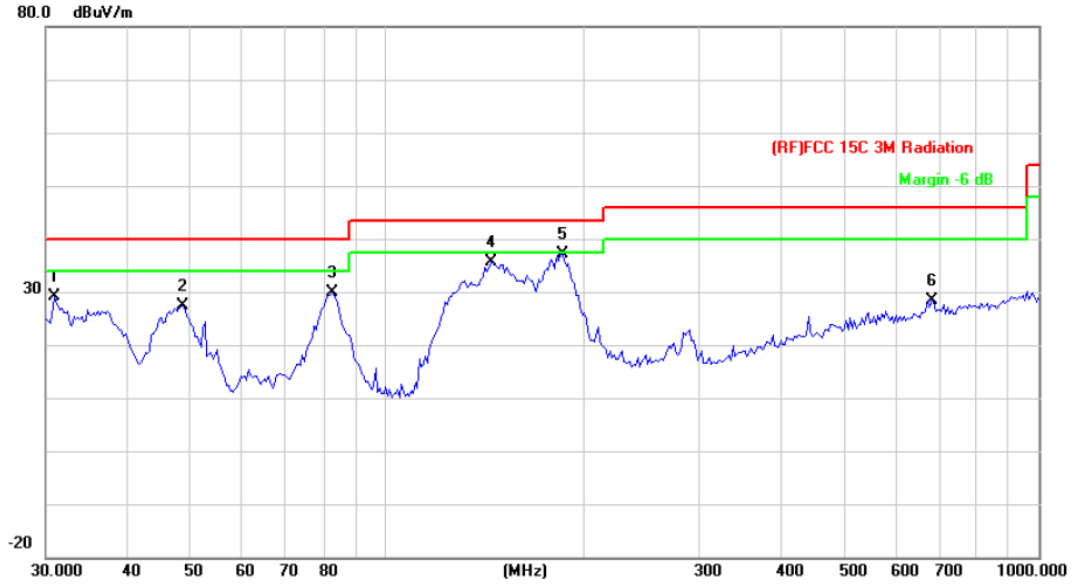

No.	Mk.	Freq.	Reading Level	Correct Factor	Measure-ment	Limit	Over	
		MHz	dBuV	dB/m	dBuV/m	dBuV/m	dB	Detector
1		30.8535	42.82	-13.58	29.24	40.00	-10.76	QP
2		48.6719	50.07	-22.62	27.45	40.00	-12.55	QP
3		82.3588	52.29	-22.32	29.97	40.00	-10.03	QP
4		144.3348	57.48	-21.93	35.55	43.50	-7.95	QP
5	*	185.7882	57.19	-19.94	37.25	43.50	-6.25	QP
6		684.7454	35.64	-7.14	28.50	46.00	-17.50	QP

*:Maximum data x:Over limit !:over margin

Emission Level= Read Level+ Correct Factor

Above 1GHz

Temperature:	25℃	**Relative Humidity:**	55%
Test Voltage:	DC 12V		
Ant. Pol.	Horizontal		
Test Mode:	BLE Mode TX 2402 MHz (1Mbps)		
Remark:	No report for the emission which more than 20 dB below the prescribed limit.		

No.	Mk.	Freq.	Reading Level	Correct Factor	Measure-ment	Limit	Over	
		MHz	dBuV	dB/m	dBuV/m	dBuV/m	dB	Detector
1		4803.466	43.08	13.01	56.09	74.00	-17.91	peak
2	*	4804.270	27.73	13.02	40.75	54.00	-13.25	AVG

Emission Level= Read Level+ Correct Factor

Temperature:	25℃	**Relative Humidity:**	55%
Test Voltage:	DC 12V		
Ant. Pol.	Vertical		
Test Mode:	BLE Mode TX 2402 MHz (1Mbps)		
Remark:	No report for the emission which more than 20 dB below the prescribed limit.		

No.	Mk.	Freq.	Reading Level	Correct Factor	Measure-ment	Limit	Over	
		MHz	dBuV	dB/m	dBuV/m	dBuV/m	dB	Detector
1		4803.862	43.13	13.01	56.14	74.00	-17.86	peak
2	*	4803.862	27.70	13.01	40.71	54.00	-13.29	AVG

Emission Level= Read Level+ Correct Factor

Temperature:	25℃	**Relative Humidity:**	55%
Test Voltage:	DC 12V		
Ant. Pol.	Horizontal		
Test Mode:	BLE Mode TX 2442 MHz (1Mbps)		
Remark:	No report for the emission which more than 20 dB below the prescribed limit.		

No.	Mk.	Freq.	Reading Level	Correct Factor	Measure-ment	Limit	Over	
		MHz	dBuV	dB/m	dBuV/m	dBuV/m	dB	Detect
1		4885.026	42.69	13.61	56.30	74.00	-17.70	pea
2	*	4885.026	27.89	13.61	41.50	54.00	-12.50	AV

Emission Level= Read Level+ Correct Factor

Temperature:	25℃	**Relative Humidity:**	55%
Test Voltage:	DC 12V		
Ant. Pol.	Vertical		
Test Mode:	BLE Mode TX 2442 MHz (1Mbps)		
Remark:	No report for the emission which more than 20 dB below the prescribed limit.		

No.	Mk.	Freq.	Reading Level	Correct Factor	Measure-ment	Limit	Over	
		MHz	dBuV	dB/m	dBuV/m	dBuV/m	dB	Detector
1		4884.570	42.85	13.61	56.46	74.00	-17.54	peak
2	*	4884.570	27.92	13.61	41.53	54.00	-12.47	AVG

Emission Level= Read Level+ Correct Factor

Temperature:	25℃	**Relative Humidity:**	55%
Test Voltage:	DC 12V		
Ant. Pol.	Horizontal		
Test Mode:	BLE Mode TX 2480 MHz (1Mbps)		
Remark:	No report for the emission which more than 20 dB below the prescribed limit.		

No.	Mk.	Freq.	Reading Level	Correct Factor	Measure-ment	Limit	Over	
		MHz	dBuV	dB/m	dBuV/m	dBuV/m	dB	Detector
1		4958.992	42.57	14.15	56.72	74.00	-17.28	peak
2	*	4958.992	27.53	14.15	41.68	54.00	-12.32	AVG

Emission Level= Read Level+ Correct Factor

Temperature:	25℃	**Relative Humidity:**	55%
Test Voltage:	DC 12V		
Ant. Pol.	Vertical		
Test Mode:	BLE Mode TX 2480 MHz (1Mbps)		
Remark:	No report for the emission which more than 20 dB below the prescribed limit.		

No.	Mk.	Freq.	Reading Level	Correct Factor	Measure-ment	Limit	Over	
		MHz	dBuV	dB/m	dBuV/m	dBuV/m	dB	Detector
1		4960.018	42.65	14.15	56.80	74.00	-17.20	peak
2	*	4960.018	27.52	14.15	41.67	54.00	-12.33	AVG

Emission Level= Read Level+ Correct Factor

Attachment C-- Peak Output Power Test Data

Temperature:	25℃	Relative Humidity:	55%
Test Voltage:	DC 12V		
Test Mode:	BLE TX Mode (1Mbps)		

Channel frequency (MHz)	Test Result (dBm)	Limit (dBm)
2402	-2.912	30
2442	-2.548	
2480	-2.670	

BLE Mode

2402 MHz

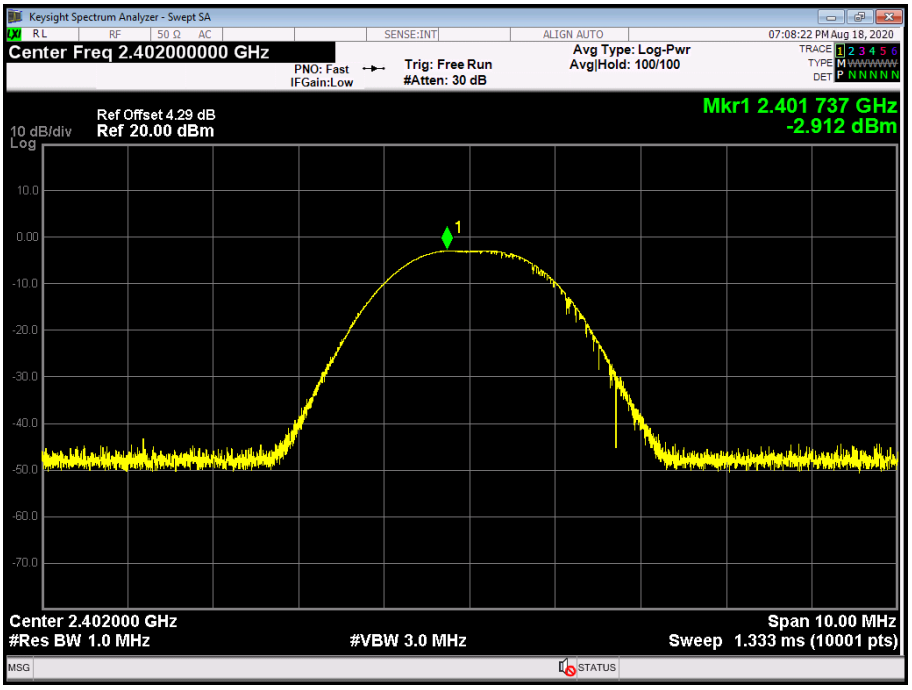

BLE Mode

2442 MHz

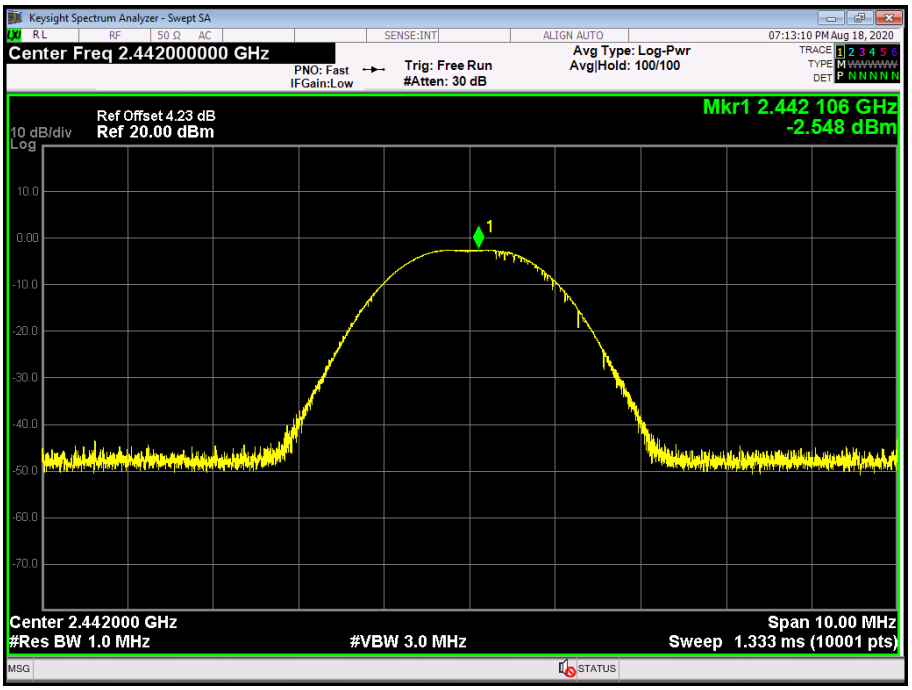

BLE Mode

2480 MHz

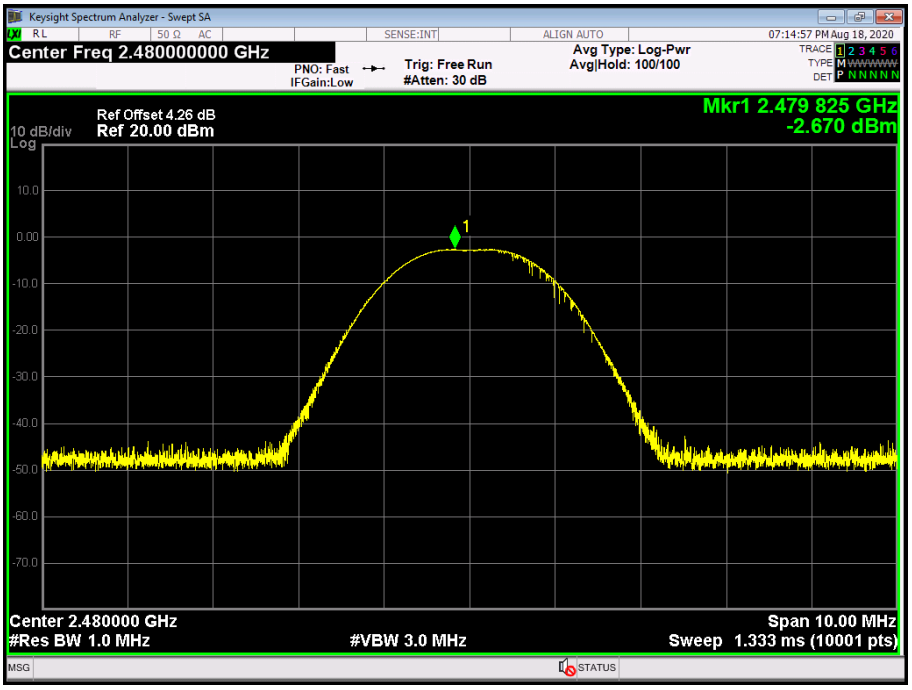

-----END OF REPORT------