FCC PART 15 SUBPART C TEST REPORT

FCC PART 15.225

Report Reference No.....:	**CTA21112400102**
FCC ID..... :	**2AVAI-NF4X**
Compiled by (position+printed name+signature)..:	File administrators Kevin Liu
Supervised by (position+printed name+signature)..:	Project Engineer Kevin Liu
Approved by (position+printed name+signature)..:	RF Manager Eric Wang
Date of issue.....:	Nov. 24, 2021
Testing Laboratory Name .....:	**Shenzhen CTA Testing Technology Co., Ltd.**
Address.....:	Room 106, Building 1, Yibaolai Industrial Park, Qiaotou Community,Fuhai Street, Bao‘an District, Shenzhen, China
Applicant’s name.....:	**Serialio Ltd.**
Address .....:	715 Discovery Blvd, Ste 510, Cedar Park, TX 78613, USA
Test specification .....:	
Standard .....:	**FCC Part 15.225**

Shenzhen CTA Testing Technology Co., Ltd. All rights reserved.

This publication may be reproduced in whole or in part for non-commercial purposes as long as the Shenzhen CTA Testing Technology Co., Ltd. is acknowledged as copyright owner and source of the material. Shenzhen CTA Testing Technology Co., Ltd. takes no responsibility for and will not assume liability for damages resulting from the reader's interpretation of the reproduced material due to its placement and context.

Test item description .....:	**IdChamp NF4 Reader/Writer**
Trade Mark .....:	idChamp®
Manufacturer .....:	Serialio Ltd.
Model/Type reference.....:	NF4x
Listed Models .....:	NF4x-SM-STD, NF4x-SM-iCL, NF4x-DM-STD, NF4x-DM-iCL
Modulation Type .....:	ASK
Operation Frequency.....:	13.56MHz
Hardware Version .....:	4
Software Version .....:	BLE FW NF4-1.0.1.59 MG App 6.12
Rating .....:	DC 5.0V From external circuit
Result.....:	**PASS**

TEST REPORT

Equipment under Test	:	IdChamp NF4 Reader/Writer
Model /Type	:	NF4x
Listed Models	:	NF4x-SM-STD, NF4x-SM-iCL, NF4x-DM-STD, NF4x-DM-iCL
Applicant	:	**Serialio Ltd.**
Address	:	715 Discovery Blvd, Ste 510, Cedar Park, TX 78613, USA
Manufacturer	:	**Serialio Ltd.**
Address	:	715 Discovery Blvd, Ste 510, Cedar Park, TX 78613, USA

Test Result:	**PASS**

The test report merely corresponds to the test sample.
It is not permitted to copy extracts of these test result without the written permission of the test laboratory.

Contents

1 TEST STANDARDS 4

2 SUMMARY 5

2.1 General Remarks 5
2.2 Product Description 5
2.3 Equipment Under Test 5
2.4 Block Diagram of Test Setup 5
2.5 Special Accessories 5
2.6 Related Submittal(s) / Grant (s) 6
2.7 Modifications 6

3 TEST ENVIRONMENT 7

3.1 Address of the test laboratory 7
3.2 Test Facility 7
3.3 Environmental conditions 7
3.4 Test Description 8
3.5 Statement of the measurement uncertainty 8
3.6 Equipments Used during the Test 9

4 TEST CONDITIONS AND RESULTS..... 10

4.1 AC Power Conducted Emission 10
4.2 Radiated Emission 13
4.3 20dB Bandwidth 19
4.4 Frequency Stability 20

5 TEST SETUP PHOTOS OF THE EUT 22

6 PHOTOS OF THE EUT 23

1 TEST STANDARDS

The tests were performed according to following standards:

FCC Rules Part 15.225: Operation within the band 13.110–14.010 MHz.
ANSI C63.10-2013: American National Standard for Testing Unlicensed Wireless Devices

2 SUMMARY

2.1 General Remarks

Date of receipt of test sample	:	Nov. 01, 2021
Testing commenced on	:	Nov. 01, 2021
Testing concluded on	:	Nov. 24, 2021

2.2 Product Description

Product Name:	IdChamp NF4 Reader/Writer
Model/Type reference:	NF4x
Power supply:	DC 5.0V From external circuit
Adapter:	Model: EP-TA20CBC Input:AC 100-240V 50/60Hz Output:DC 5V 2A
Testing sample ID:	CTA211124001-1# (Engineer sample), CTA211124001-2# (Normal sample)
13.56MHz RFID	
Operation frequency:	13.56MHz
Modulation :	ASK
No. of Channel :	1
Antenna type:	Loop Antenna
Antenna gain:	0.00 dBi

2.3 Equipment Under Test

Power supply system utilised

Power supply voltage	:	○	230V / 50 Hz	○	120V / 60Hz
		○	12 V DC	○	24 V DC
		●	Other (specified in blank below)		

DC 5.0V From External circuit

2.4 Block Diagram of Test Setup

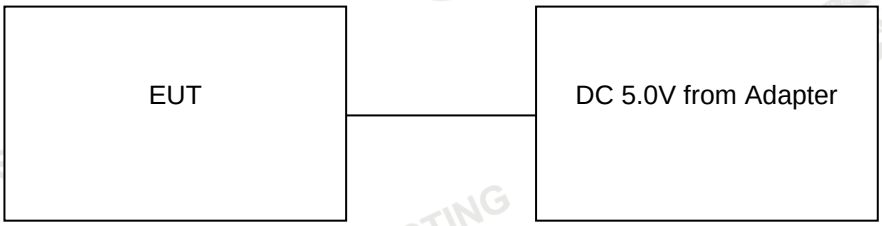

2.5 Special Accessories

Follow auxiliary equipment(s) test with EUT that provided by the manufacturer or laboratory is listed as follow:

Description	Manufacturer	Model	Technical Parameters	Certificate	Provided by

/	/	/	/	/	/
/	/	/	/	/	/
/	/	/	/	/	/

2.6 Related Submittal(s) / Grant (s)

This submittal(s) (test report) is intended for the EUT filing to comply with Section 15.225 of the FCC Part 15, Subpart C Rules.

2.7 Modifications

No modifications were implemented to meet testing criteria.

3 TEST ENVIRONMENT

3.1 Address of the test laboratory

Shenzhen CTA Testing Technology Co., Ltd.
Room 106, Building 1, Yibaolai Industrial Park, Qiaotou Community,Fuhai Street, Bao'an District, Shenzhen, China

3.2 Test Facility

The test facility is recognized, certified, or accredited by the following organizations:
FCC-Registration No.: 517856 Designation Number: CN1318

Shenzhen CTA Testing Technology Co., Ltd. has been listed on the US Federal Communications Commission list of test facilities recognized to perform electromagnetic emissions measurements.

A2LA-Lab Cert. No.: 6534.01

Shenzhen CTA Testing Technology Co., Ltd. has been listed by American Association for Laboratory Accreditation to perform electromagnetic emission measurement.

The 3m-Semi anechoic test site fulfils CISPR 16-1-4 according to ANSI C63.10 and CISPR 16-1-4:2010.

3.3 Environmental conditions

During the measurement the environmental conditions were within the listed ranges:
Radiated Emission:

Temperature:	24 ° C
Humidity:	45 %
Atmospheric pressure:	950-1050mbar

AC Power Conducted Emission:

Temperature:	25 ° C
Humidity:	46 %
Atmospheric pressure:	950-1050mbar

Conducted testing:

Temperature:	25 ° C
Humidity:	44 %
Atmospheric pressure:	950-1050mbar

3.4 Test Description

FCC PART 15 .225		
FCC Part 15.207	AC Power Conducted Emission	PASS
FCC Part 2.1049	20dB Bandwidth	PASS
FCC Part 15.225(a) (b) (c)	In-band Emissions	PASS
FCC Part 15.225(d)/15.207	Out-of-band Emissions	PASS
FCC Part 15.225(e)	Frequency Stability Tolerance	PASS

3.5 Statement of the measurement uncertainty

The data and results referenced in this document are true and accurate. The reader is cautioned that there may be errors within the calibration limits of the equipment and facilities. The measurement uncertainty was calculated for all measurements listed in this test report acc. to CISPR 16 - 4 „Specification for radio disturbance and immunity measuring apparatus and methods – Part 4: Uncertainty in EMC Measurements“ and is documented in the Shenzhen CTA Testing Technology Co., Ltd. quality system acc. to DIN EN ISO/IEC 17025. Furthermore, component and process variability of devices similar to that tested may result in additional deviation. The manufacturer has the sole responsibility of continued compliance of the device.

Hereafter the best measurement capability for Shenzhen CAT laboratory is reported:

Test	Range	Measurement Uncertainty	Notes
Radiated Emission	30~1000MHz	4.06 dB	(1)
Radiated Emission	1~18GHz	5.14 dB	(1)
Radiated Emission	18-40GHz	5.38 dB	(1)
Conducted Disturbance	0.15~30MHz	2.14 dB	(1)

(1) This uncertainty represents an expanded uncertainty expressed at approximately the 95% confidence level using a coverage factor of k=2.

3.6 Equipments Used during the Test

Test Equipment	Manufacturer	Model No.	Equipment No.	Calibration Date	Calibration Due Date
LISN	R&S	ENV216	CTA-308	2021/08/06	2022/08/05
LISN	R&S	ENV216	CTA-314	2021/08/06	2022/08/05
EMI Test Receiver	R&S	ESPI	CTA-307	2021/08/06	2022/08/05
EMI Test Receiver	R&S	ESCI	CTA-306	2021/08/06	2022/08/05
Spectrum Analyzer	Agilent	N9020A	CTA-301	2021/08/06	2022/08/05
Spectrum Analyzer	R&S	FSP	CTA-337	2021/08/06	2022/08/05
Vector Signal generator	Agilent	N5182A	CTA-305	2021/08/06	2022/08/05
Analog Signal Generator	R&S	SML03	CTA-304	2021/08/06	2022/08/05
Universal Radio Communication	CMW500	R&S	CTA-302	2021/08/06	2022/08/05
Temperature and humidity meter	Chigo	ZG-7020	CTA-326	2021/08/06	2022/08/05
Ultra-Broadband Antenna	Schwarzbeck	VULB9163	CTA-310	2021/08/07	2022/08/06
Horn Antenna	Schwarzbeck	BBHA 9120D	CTA-309	2021/08/07	2022/08/06
Loop Antenna	Zhinan	ZN30900C	CTA-311	2021/08/07	2022/08/06
Horn Antenna	Beijing Hangwei Dayang	OBH100400	CTA-336	2021/08/06	2022/08/05
Amplifier	Schwarzbeck	BBV 9745	CTA-312	2021/08/06	2022/08/05
Amplifier	Taiwan chengyi	EMC051845B	CTA-313	2021/08/06	2022/08/05
Directional coupler	NARDA	4226-10	CTA-303	2021/08/06	2022/08/05
High-Pass Filter	XingBo	XBLBQ-GTA18	CTA-402	2021/08/06	2022/08/05
High-Pass Filter	XingBo	XBLBQ-GTA27	CTA-403	2021/08/06	2022/08/05
Automated filter bank	Tonscend	JS0806-F	CTA-404	2021/08/06	2022/08/05
Power Sensor	Agilent	U2021XA	CTA-405	2021/08/06	2022/08/05
Amplifier	Schwarzbeck	BBV9719	CTA-406	2021/08/06	2022/08/05

Note: The Cal.Interval was one year.

4 TEST CONDITIONS AND RESULTS

4.1 AC Power Conducted Emission

TEST CONFIGURATION

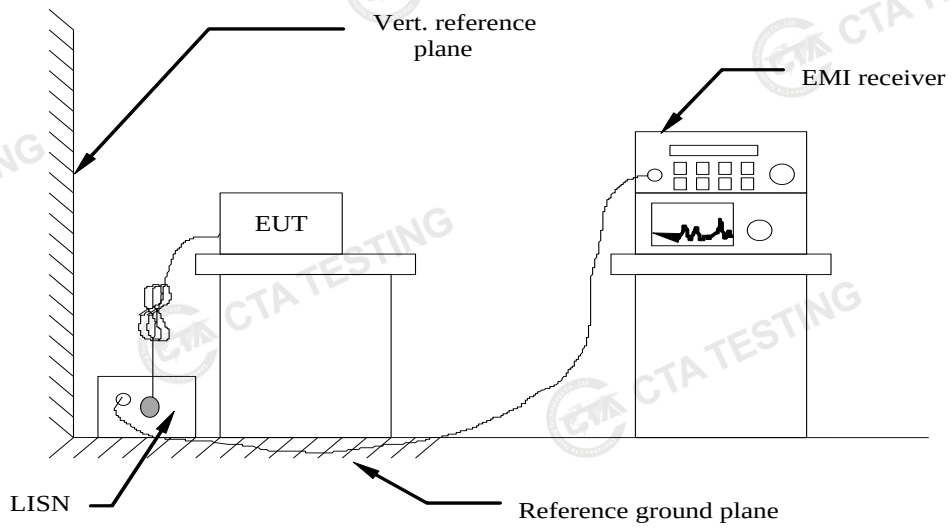

TEST PROCEDURE

1 The equipment was set up as per the test configuration to simulate typical actual usage per the user's manual. The EUT is a tabletop system, a wooden table with a height of 0.8 meters is used and is placed on the ground plane as per ANSI C63.10-2013.
2 Support equipment, if needed, was placed as per ANSI C63.10-2013
3 All I/O cables were positioned to simulate typical actual usage as per ANSI C63.10-2013
4 The EUT received DC 12V power from adapter, the adapter received AC120V/60Hz and AC 240V/60Hz power through a Line Impedance Stabilization Network (LISN) which supplied power source and was grounded to the ground plane.
5 All support equipments received AC power from a second LISN, if any.
6 The EUT test program was started. Emissions were measured on each current carrying line of the EUT using a spectrum Analyzer / Receiver connected to the LISN powering the EUT.The LISN has two monitoring points: Line 1 (Hot Side) and Line 2 (Neutral Side). Two scans were taken: one with Line 1 connected to Analyzer / Receiver and Line 2 connected to a 50 ohm load; the second scan had Line 1 connected to a 50 ohm load and Line 2 connected to the Analyzer / Receiver.
7 Analyzer / Receiver scanned from 150 KHz to 30MHz for emissions in each of the test modes.
8 During the above scans, the emissions were maximized by cable manipulation.

AC Power Conducted Emission Limit

For intentional device, according to § 15.207(a) AC Power Conducted Emission Limits is as following：

Frequency range (MHz)	Limit (dBuV)	
	Quasi-peak	Average
0.15-0.5	66 to 56*	56 to 46*
0.5-5	56	46
5-30	60	50
* Decreases with the logarithm of the frequency.		

TEST RESULTS

Remark:

1. Both 120 VAC, 50/60 Hz and 240 VAC, 50/60 Hz power supply have been tested, only the worst result of 120 VAC, 60 Hz was reported as below:.

Power supply:	DC 5V from Adapter AC 120V/60Hz	Polarization	L

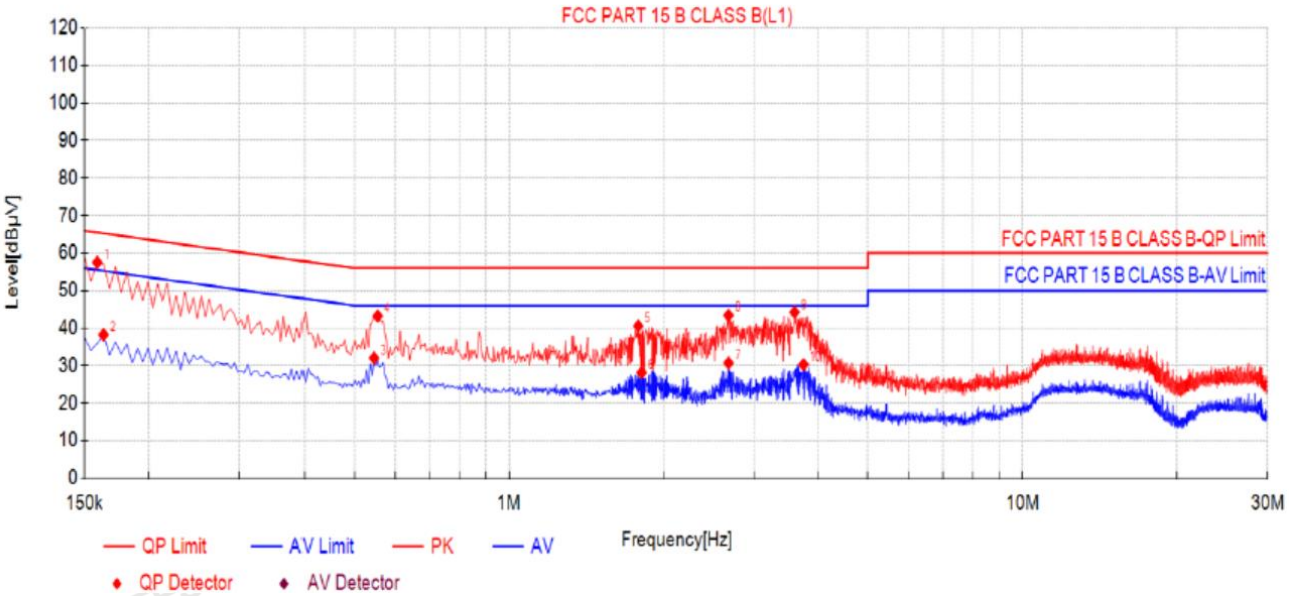

Suspected List

NO.	Freq. [MHz]	Reading [dBµV]	Level [dBµV]	Factor [dB]	Limit [dBµV]	Margin [dB]	Detector	Type	Verdict
1	0.159	47.03	57.53	10.50	65.52	7.99	Qp	L1	PASS
2	0.1635	27.75	38.25	10.50	55.28	17.03	AV	L1	PASS
3	0.546	21.53	32.03	10.50	46.00	13.97	AV	L1	PASS
4	0.555	32.70	43.20	10.50	56.00	12.80	Qp	L1	PASS
5	1.788	30.08	40.58	10.50	56.00	15.42	Qp	L1	PASS
6	1.815	17.68	28.18	10.50	46.00	17.82	AV	L1	PASS
7	2.679	20.21	30.71	10.50	46.00	15.29	AV	L1	PASS
8	2.679	32.89	43.39	10.50	56.00	12.61	Qp	L1	PASS
9	3.6015	33.73	44.23	10.50	56.00	11.77	Qp	L1	PASS
10	3.75	19.79	30.29	10.50	46.00	15.71	AV	L1	PASS

Note:1). Level (dBµV)= Reading (dBµV) + Factor (dB)

2)Factor (dB)=insertion loss of LISN (dB) + Cable loss (dB)

3). Margin(dB) = Limit (dBµV) - Level (dBµV)

Power supply:	DC 5V from Adapter AC 120V/60Hz	Polarization	N

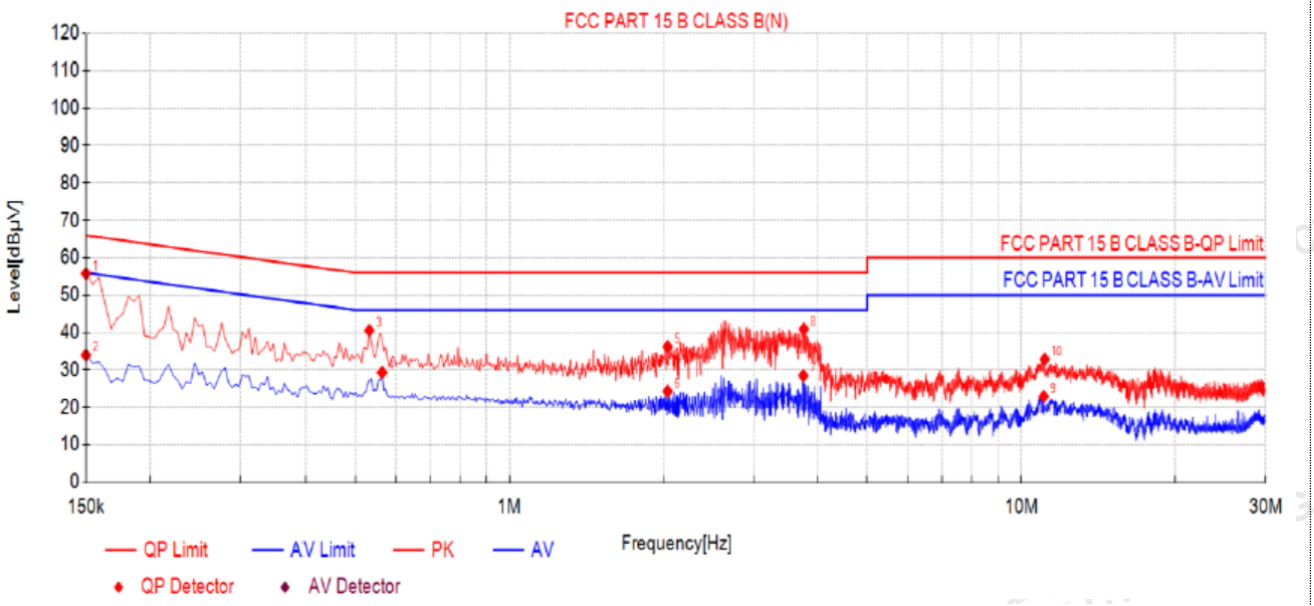

Suspected List

NO.	Freq. [MHz]	Reading [dBµV]	Level [dBµV]	Factor [dB]	Limit [dBµV]	Margin [dB]	Detector	Type	Verdict
1	0.15	45.28	55.78	10.50	66.00	10.22	Qp	N	PASS
2	0.15	23.43	33.93	10.50	56.00	22.07	AV	N	PASS
3	0.5325	30.04	40.54	10.50	56.00	15.46	Qp	N	PASS
4	0.564	18.81	29.31	10.50	46.00	16.69	AV	N	PASS
5	2.04	25.73	36.23	10.50	56.00	19.77	Qp	N	PASS
6	2.04	13.78	24.28	10.50	46.00	21.72	AV	N	PASS
7	3.7545	17.98	28.48	10.50	46.00	17.52	AV	N	PASS
8	3.7635	30.39	40.89	10.50	56.00	15.11	Qp	N	PASS
9	11.067	12.43	22.93	10.50	50.00	27.07	AV	N	PASS
10	11.1165	22.36	32.86	10.50	60.00	27.14	Qp	N	PASS

Note:1). Level (dBµV)= Reading (dBµV) + Factor (dB)
2)Factor (dB)=insertion loss of LISN (dB) + Cable loss (dB)
3). Margin(dB) = Limit (dBµV) - Level (dBµV)

4.2 Radiated Emission

LIMIT

a The field strength of any emissions within the band 13.553–13.567 MHz shall not exceed 15,848 microvolts/ meter at 30 meters.

b Within the bands 13.410–13.553 MHz and 13.567–13.710 MHz, the field strength of any emissions shall not exceed 334 microvolts/meter at 30 meters.

c Within the bands 13.110–13.410 MHz and 13.710–14.010 MHz the field strength of any emissions shall not exceed 106 microvolts/meter at 30 meters.

d The field strength of any emissions appearing outside of the 13.110– 14.010 MHz band shall not exceed the general radiated emission limits in §15.209.

Frequency (MHz)	Distance (Meters)	Radiated (dBuV/m)	Radiated (μV/m)
0.009-0.49	3	20log(2400/F(KHz))+40log(300/3)	2400/F(KHz)
0.49-1.705	3	20log(24000/F(KHz))+ 40log(30/3)	24000/F(KHz)
1.705-13.110	3	69.54	30
13.110-13.410	3	80.50	106
13410-13.553	3	90.47	334
13.553-13.567	3	124.00	15848
13.567-13.710	3	90.47	334
13.710-14.010	3	80.50	106
14.010-30.0	3	69.54	30
30-88	3	40.0	100
88-216	3	43.5	150
216-960	3	46.0	200
Above 960	3	54.0	500

TEST CONFIGURATION

Frequency range 9 KHz – 30MHz

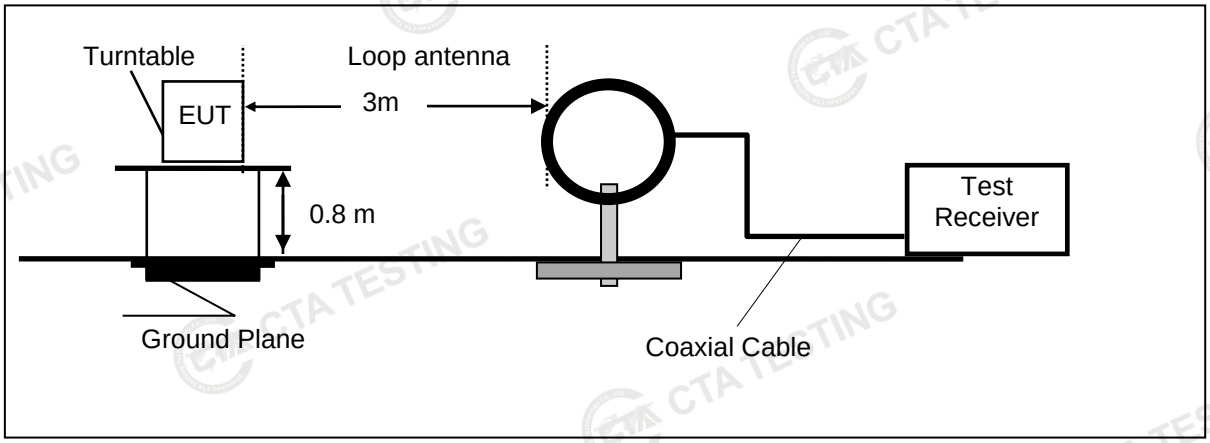

Frequency range 30MHz – 1000MHz

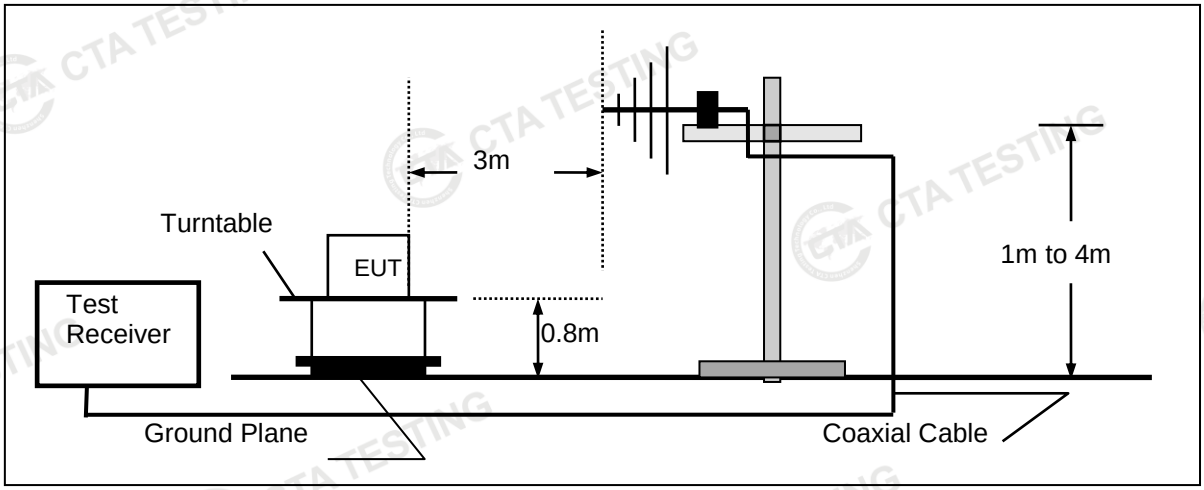

TEST PROCEDURE

1. The EUT was placed on a turn table which is 0.8m above ground plane when testing frequency range 9 KHz –1GHz.
2. Maximum procedure was performed by raising the receiving antenna from 1m to 4m and rotating the turn table from 0° to 360° to acquire the highest emissions from EUT.
3. And also, each emission was to be maximized by changing the polarization of receiving antenna both horizontal and vertical.
4. Repeat above procedures until all frequency measurements have been completed.
5. Radiated emission test frequency band from 9KHz to 1GHz.
6. The distance between test antenna and EUT as following table states:

Test Frequency range	Test Antenna Type	Test Distance
9KHz-30MHz	Active Loop Antenna	3
30MHz-1GHz	Ultra-Broadband Antenna	3

7. Setting test receiver/spectrum as following table states:

Test Frequency range	Test Receiver/Spectrum Setting	Detector
9KHz-150KHz	RBW=200Hz/VBW=3KHz,Sweep time=Auto	QP
150KHz-30MHz	RBW=9KHz/VBW=100KHz,Sweep time=Auto	QP
30MHz-1GHz	RBW=120KHz/VBW=1000KHz,Sweep time=Auto	QP

Field Strength Calculation

The field strength is calculated by adding the Antenna Factor and Cable Factor and subtracting the Amplifier Gain and Duty Cycle Correction Factor(if any) from the measured reading. The basic equation with a sample calculation is as follows:

FS = RA + AF + CL - AG

Where FS = Field Strength	CL = Cable Attenuation Factor (Cable Loss)
RA = Reading Amplitude	AG = Amplifier Gain
AF = Antenna Factor	

Transd=AF +CL-AG

RADIATION LIMIT

For intentional device, according to § 15.209(a), the general requirement of field strength of radiated emission from intentional radiators at a distance of 3 meters shall not exceed the following table. According to § 15.247(d), in any 100kHz bandwidth outside the frequency band in which the EUT is operating, the radio frequency power that is produced by the intentional radiator shall be at least 20dB below that in the100kHz bandwidth within the band that contains the highest level of desired power.

The pre-test have done for the EUT in three axes and found the worst emission at position shown in test setup photos.

Frequency (MHz)	Distance (Meters)	Radiated (dBμV/m)	Radiated (μV/m)
0.009-0.49	3	20log(2400/F(KHz))+40log(300/3)	2400/F(KHz)
0.49-1.705	3	20log(24000/F(KHz))+ 40log(30/3)	24000/F(KHz)
1.705-30	3	20log(30)+ 40log(30/3)	30
30-88	3	40.0	100
88-216	3	43.5	150
216-960	3	46.0	200
Above 960	3	54.0	500

TEST RESULTS

Remark:

1. This test was performed with EUT in X, Y, Z position and the worse case was found when EUT in X position.
2. We measured Radiated Emission at GFSK,π/4 DQPSK and 8DPSK mode from 9 KHz to 25GHz and recorded worst case at GFSK DH5 mode.
3. For below 1GHz testing recorded worst at GFSK DH5 middle channel.
4. Radiated emission test from 9 KHz to 10th harmonic of fundamental was verified, and no emission found except system noise floor in 9 KHz to 30MHz and not recorded in this report.

For 30MHz-1GHz

Horizontal

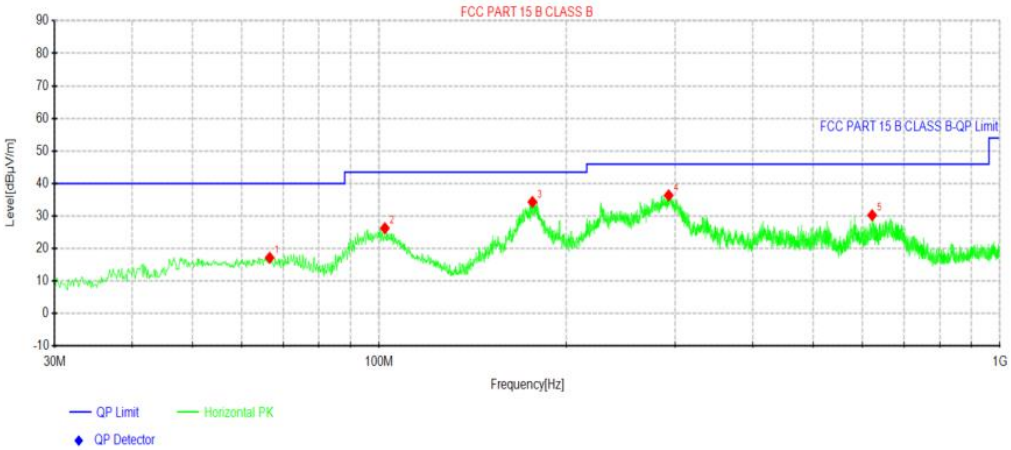

Suspected Data List									
NO.	Freq. [MHz]	Reading [dBµV]	Level [dBµV/m]	Factor [dB/m]	Limit [dBµV/m]	Margin [dB]	Height [cm]	Angle [°]	Polarity
1	66.6175	37.17	17.19	-19.98	40.00	22.81	100	3	Horizontal
2	102.143	44.75	26.28	-18.47	43.50	17.22	100	0	Horizontal
3	176.591	55.04	34.33	-20.71	43.50	9.17	100	0	Horizontal
4	292.627	53.82	36.37	-17.45	46.00	9.63	100	188	Horizontal
5	622.548	42.45	30.27	-12.18	46.00	15.73	100	357	Horizontal

Note:1).Level (dBµV/m)= Reading (dBµV)+ Factor (dB/m)
2). Factor(dB/m)=Antenna Factor (dB/m) + Cable loss (dB) - Pre Amplifier gain (dB)
3). Margin(dB) = Limit (dBµV/m) - Level (dBµV/m)

Vertical

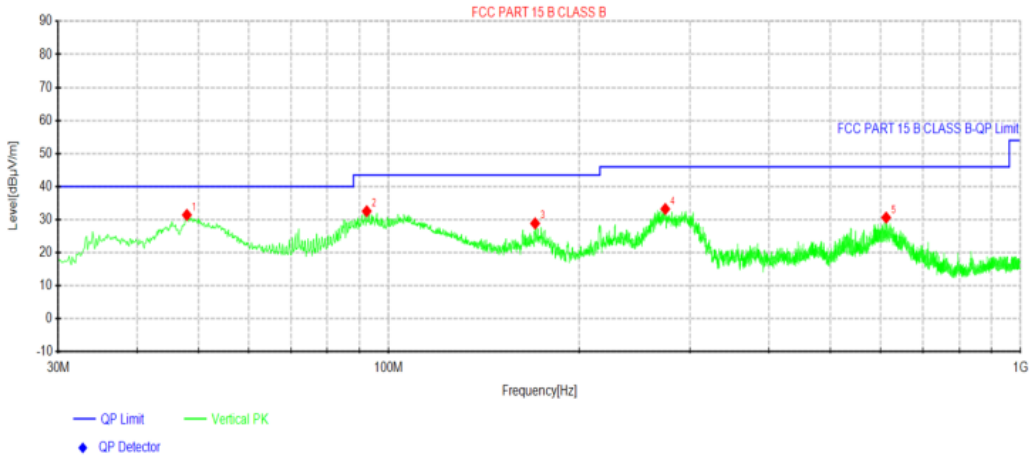

Suspected Data List

NO.	Freq. [MHz]	Reading [dBµV]	Level [dBµV/m]	Factor [dB/m]	Limit [dBµV/m]	Margin [dB]	Height [cm]	Angle [°]	Polarity
1	47.945	47.66	31.44	-16.22	40.00	8.56	100	133	Vertical
2	92.3225	52.12	32.55	-19.57	43.50	10.95	100	281	Vertical
3	170.528	49.88	28.87	-21.01	43.50	14.63	100	25	Vertical
4	274.076	50.93	33.24	-17.69	46.00	12.76	100	359	Vertical
5	612.848	42.80	30.62	-12.18	46.00	15.38	100	342	Vertical

Note:1).Level (dBµV/m)= Reading (dBµV)+ Factor (dB/m)
2). Factor(dB/m)=Antenna Factor (dB/m) + Cable loss (dB) - Pre Amplifier gain (dB)
3). Margin(dB) = Limit (dBµV/m) - Level (dBµV/m)

In-band Emissions

Frequency(MHz):			13.56			Polarity:		HORIZONTAL	
No.	Frequency (MHz)	Emission Level (dBuV/m)	Detector	Limit (dBuV/m)	Margin (dB)	Raw Value (dBuV)	Antenna Factor (dB/m)	Cable Factor (dB)	Correction Factor (dB/m)
1	13.15	51.04	PK	80.5	29.46	46.32	5.21	-0.49	4.72
2	13.55	72.62	PK	90.47	17.85	67.85	5.26	-0.49	4.77
3	13.56	85.69	PK	124	38.31	80.92	5.26	-0.49	4.77
4	13.57	72.28	PK	90.47	18.19	67.51	5.26	-0.49	4.77
5	13.75	51.23	PK	80.5	29.27	46.42	5.30	-0.49	4.81

Frequency(MHz):			13.56			Polarity:		VERTICAL	
No.	Frequency (MHz)	Emission Level (dBuV/m)	Detector	Limit (dBuV/m)	Margin (dB)	Raw Value (dBuV)	Antenna Factor (dB/m)	Cable Factor (dB)	Correction Factor (dB/m)
1	13.15	51.19	PK	80.5	29.31	46.47	5.21	-0.49	4.72
2	13.55	73.19	PK	90.47	17.28	68.42	5.26	-0.49	4.77
3	13.56	86.33	PK	124	37.67	81.56	5.26	-0.49	4.77
4	13.57	70.09	PK	90.47	20.38	65.32	5.26	-0.49	4.77
5	13.75	51.49	PK	80.5	29.01	46.68	5.3	-0.49	4.81

REMARKS:

1. Emission level (dBuV/m) =Raw Value (dBuV)+Correction Factor (dB/m)
2. Correction Factor (dB/m) = Antenna Factor (dB/m)+Cable Factor (dB)
3. Margin value = Limit value- Emission level.
4. The other emission levels were very low against the limit.

Out-of-band Emissions

Frequency(MHz):			13.56			Polarity:		HORIZONTAL	
No.	Frequency (MHz)	Emission Level (dBuV/m)	Detector	Limit (dBuV/m)	Margin (dB)	Raw Value (dBuV)	Antenna Factor (dB/m)	Cable Factor (dB)	Correction Factor (dB/m)
1	27.12	37.78	PK	69.54	31.76	30.28	7.25	0.25	7.5
2	40.68	29.67	PK	40	10.33	21.04	8.12	0.51	8.63
3	54.24	28.65	PK	40	11.35	19.57	8.36	0.72	9.08
4	67.80	24.59	PK	40	15.41	15.06	8.57	0.96	9.53

Frequency(MHz):			13.56			Polarity:		VERTICAL	
No.	Frequency (MHz)	Emission Level (dBuV/m)	Detector	Limit (dBuV/m)	Margin (dB)	Raw Value (dBuV)	Antenna Factor (dB/m)	Cable Factor (dB)	Correction Factor (dB/m)
1	27.12	38.81	PK	69.54	30.73	31.31	7.25	0.25	7.5
2	40.68	31.56	PK	40	8.44	22.93	8.12	0.51	8.63
3	54.24	29.63	PK	40	10.37	20.55	8.36	0.72	9.08
4	67.80	24.95	PK	40	15.05	15.42	8.57	0.96	9.53

REMARKS:

1. Emission level (dBuV/m) =Raw Value (dBuV)+Correction Factor (dB/m)
2. Correction Factor (dB/m) = Antenna Factor (dB/m)+Cable Factor (dB)
3. Margin value = Limit value- Emission level.
4. The other emission levels were very low against the limit.

4.3 20dB Bandwidth

Limit

No limit for 20dB bandwidth.

Test Procedure

The 20dB bandwidth is measured with a spectrum analyzer connected via a receive antenna placed near the EUT while the EUT is operating in transmission mode.

The 20dB bandwidth is defined as the total spectrum the power of which is higher than peak power minus 20dB.

Test Configuration

Test Results

Modulation	Frequency(MHz)	20dB bandwidth (KHz)	Result
ASK	13.56MHz	8.083	Pass

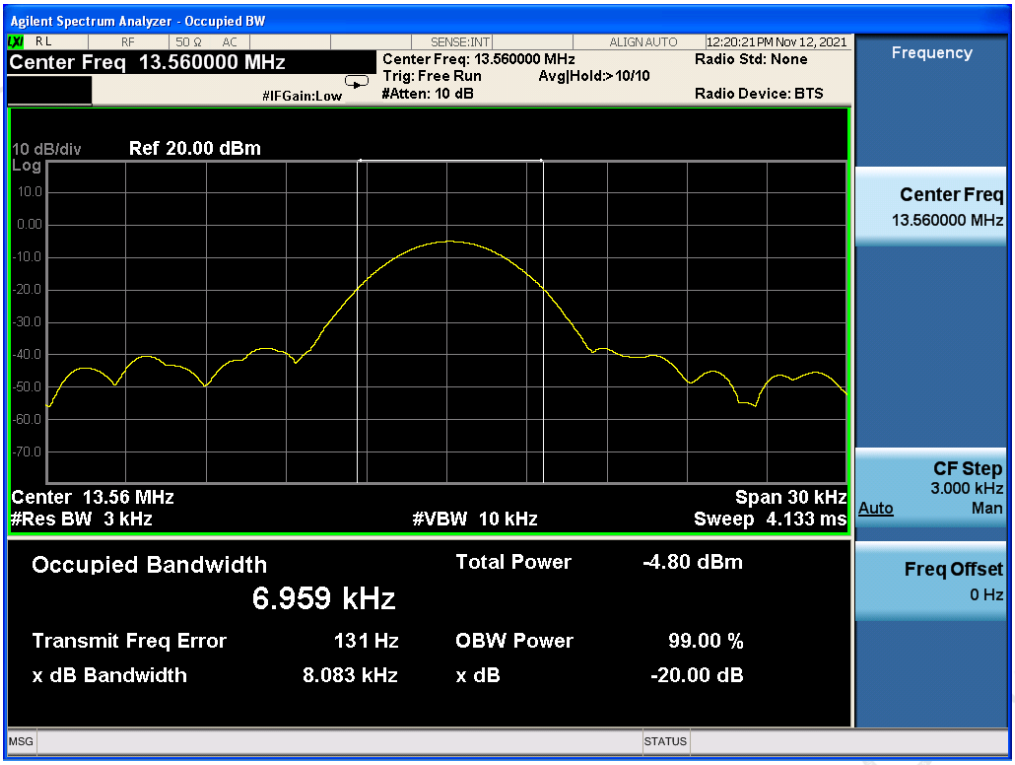

4.4 Frequency Stability

LIMIT

The frequency tolerance of the carrier signal shall be maintained within ±0.01% of the operating frequency over a temperature variation of -20 degrees to +50 degrees C at normal supply voltage, and for a variation in the primary supply voltage from 85% to 115% of the rated supply voltage at a temperature of 20 degrees C.

TEST CONFIGURATION

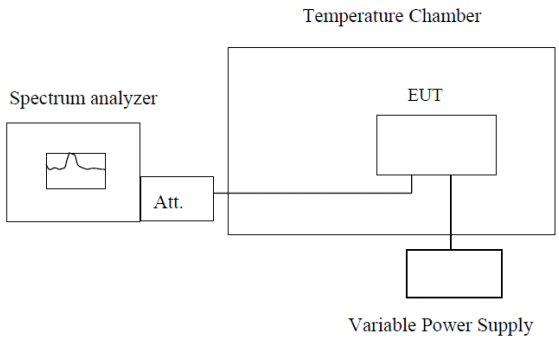

Note : Measurement setup for testing on Antenna connector

TEST PROCEDURE

1. The equipment under test was connected to an external DC power supply and input rated voltage.
2. RF output was connected to a frequency counter or spectrum analyzer via feed through attenuators.
3. The EUT was placed inside the temperature chamber.
4. Set the spectrum analyzer RBW low enough to obtain the desired frequency resolution and measure EUT 20℃ operating frequency as reference frequency.
5. Turn EUT off and set the chamber temperature to –20℃. After the temperature stabilized for approximately 30 minutes recorded the frequency.
6. Repeat step measure with 10℃ increased per stage until the highest temperature of +50℃ reached.
7. Reduce the input voltage to specified extreme voltage variation (+/- 15%) or endpoint, record the maximum frequency change.

TEST RESULTS

Reference Frequency: 13.56MHz				
Voltage (V)	Temperature (℃)	Frequency (Hz)	Frequency Deviation(Hz)	Deviation (%)
5.0	+20(Ref)	13.560087	87	0.000642%
	-20	13.560142	142	0.001047%
	-10	13.560121	121	0.000892%
	0	13.560115	115	0.000848%
	+10	13.560148	148	0.001091%
	+20	13.560092	92	0.000678%
	+25	13.560173	173	0.001276%
	+30	13.560143	143	0.001055%
	+40	13.560181	181	0.001335%
	+50	13.560082	82	0.000605%
5.75	+20	13.560141	141	0.001040%
4.25	+20	13.560169	169	0.001246%

5 Test Setup Photos of the EUT

6 Photos of the EUT

Reference to the test report No. **CTA21112400101**

**********End of Report**********