Talaria TWO™ EVB-A Evaluation Boards (INP3010 / INP3011 / INP3012 / INP3013)

Extreme Low Power Wireless Platform

IEEE 802.11 b/g/n, BLE 5.0

User Guide for Talaria TWO Evaluation & Development Kit

Release: 08-16-2021

InnoPhase, Inc.
6815 Flanders Drive
San Diego, CA 92121
innophaseinc.com

Copyright © InnoPhase, Inc., 2021 All Rights Reserved

Revision History

Version	Date	Comments
1.0	07-04-2020	First version
1.1	09-14-2020	Updated for SDK 2.1.1 release
2.0	05-13-2021	Updated for SDK 2.2 release Updated block diagram to reflect v1.3 board and jumper settings
2.1	07-09-2021	Updated labels for INP1012/1013
2.2	07-30-2021	Updated Antenna details for INP1010/11/12/13
2.3	08-06-2021	Updated with additional Antenna information for INP10x modules
2.4	08-16-2021	Updated Antenna specifications table for INP10x modules

 ©InnoPhase, Inc. 2021

Contents

1 Figures 4
2 Tables 4
3 Terms & Definitions 5
4 Introduction 6
5 INP301x Package Contents 6
6 Description of the board 7
6.1 Block Diagram 7
6.2 Jumpers on the board 9
6.3 Power Supply and Mode Switch 10
6.4 IO Header (J1) 11
6.5 Shield Headers (JP1 to JP4) 12
6.6 On Board Sensors 13
7 Functional Description 14
7.1 Stand-alone mode 14
7.1.1 Driver Installation for Windows OS 15
7.2 Shield Mode 20
7.2.1 EVB-A as Wi-Fi Shield with STM32 Nucleo Board 20
8 Power Measurement 21
9 Using Battery as Power Source 22
10 Antenna 23
10.1 INP1010 23
10.2 INP1011 24
10.3 INP1012 25
10.4 INP1013 26
11 FCC/ISED Regulatory Notices 27
11.1 Modification Statement 27
11.2 Interference Statement 27
11.3 Radio Frequency Radiation Exposure Statement 27
11.4 RF Exposure Statement for Module Integration 28
11.5 Labeling Requirements for the Host Device 29

 ©InnoPhase, Inc. 2021

11.5.1 INP1010 30
11.5.2 INP1011 30
11.5.3 INP1012 31
11.5.4 INP1013 31
12 Support 32
13 Disclaimers 33

 ©InnoPhase, Inc. 2021

1 Figures

Figure 1: INP301x EVB-A Board with INP101x module board installed 6
Figure 2: Block diagram of INP301x Evaluation Board 7
Figure 3: INP301x EVB-A control and connectivity points 9
Figure 4: Power supply section 10
Figure 5: IO Header 11
Figure 6: Arduino UNO shield compatible jumpers 12
Figure 7: On board sensors 13
Figure 8: Listing devices in Zadig 15
Figure 9: Updating Talaria TWO USB driver to libusbK 16
Figure 10: Device Manager 17
Figure 11: Update Devices 18
Figure 12: Select the device driver 19
Figure 13: INP3010 EVB-A as Wi-Fi Shield 20
Figure 14: Current measurement setup using Otti Arc 21
Figure 15: J10 Battery connection 22
Figure 16: Labelling requirement - INP1010 30
Figure 17: Labelling requirement - INP1011 30
Figure 18: Labelling requirement - INP1012 31
Figure 19: Labelling requirement - INP1012 31

2 Tables

Table 1: Jumper Information 9
Table 2: FTDI Layout 14
Table 3: Module ID with Antenna details 23
Table 4: INP1010 - Antenna specifications 23
Table 5: INP1011 - Antenna specifications 24
Table 6: INP1012 - Antenna specifications 25
Table 7: INP1013 - Antenna specifications 26

 ©InnoPhase, Inc. 2021

3 Terms & Definitions

BLE	Bluetooth Low Energy
DMM	Digital Multimeter
DPDT	Double Pole Double Throw
FTDI	Future Technology Devices International
GPIO	General Purpose Input/Output
IO	Input Output
JTAG	Joint Test Action Group
LED	Light Emitting Diode
MPSEE	Multi-Protocol Synchronous Serial Engine
SCL	Serial Clock
SDA	Serial Data
SPI	Serial Peripheral Interface
SPDT	Single Pole Double Throw
UART	Universal Asynchronous Receiver-Transmitter
USB	Universal Serial Bus

 ©InnoPhase, Inc. 2021

4 Introduction

INP301x Talaria TWO evaluation board is designed as an evaluation platform for the INP101x modules. This user guide provides an overview of the evaluation board explaining its key features and functions.

5 INP301x Package Contents

The package contains:

1. INP3010*, INP3011**, INP3012 or INP3013 board
2. Micro USB cable
3. Antenna (INP3011 and INP3012 boards)
4. Battery box

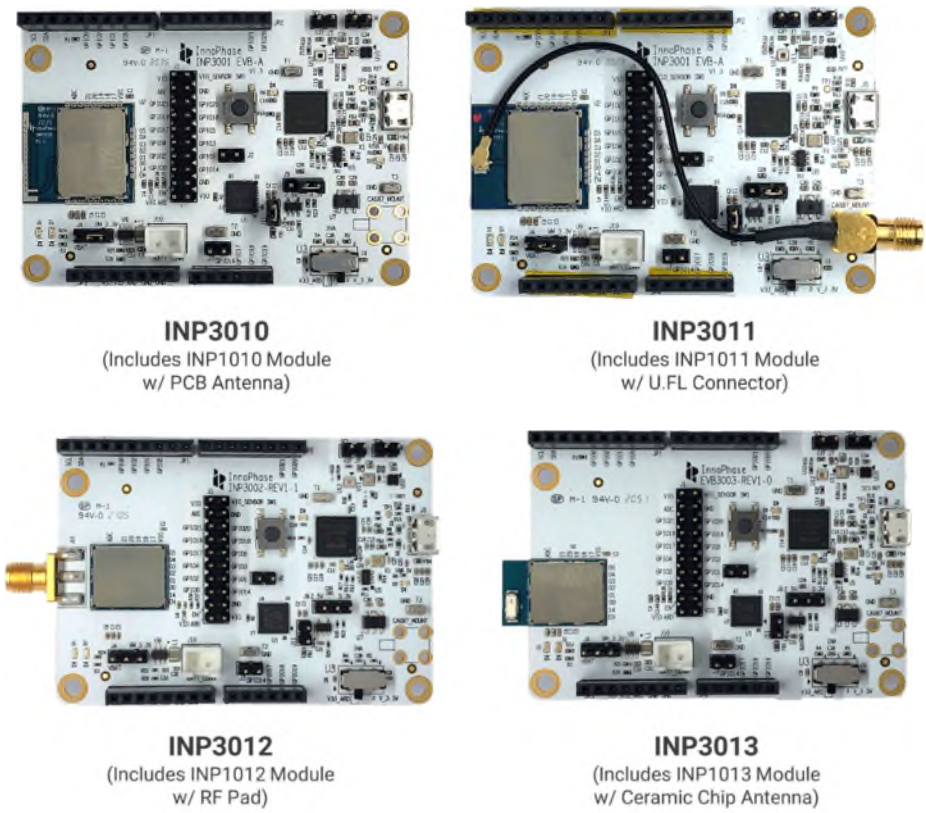

Figure 1: INP301x EVB-A Board with INP101x module board installed

**INP3010: EVB boards having INP1010 module with PCB antenna*

***INP3011: EVB boards having INP1011 module with U.FL antenna connector*

 ©InnoPhase, Inc. 2021

6 Description of the board

6.1 Block Diagram

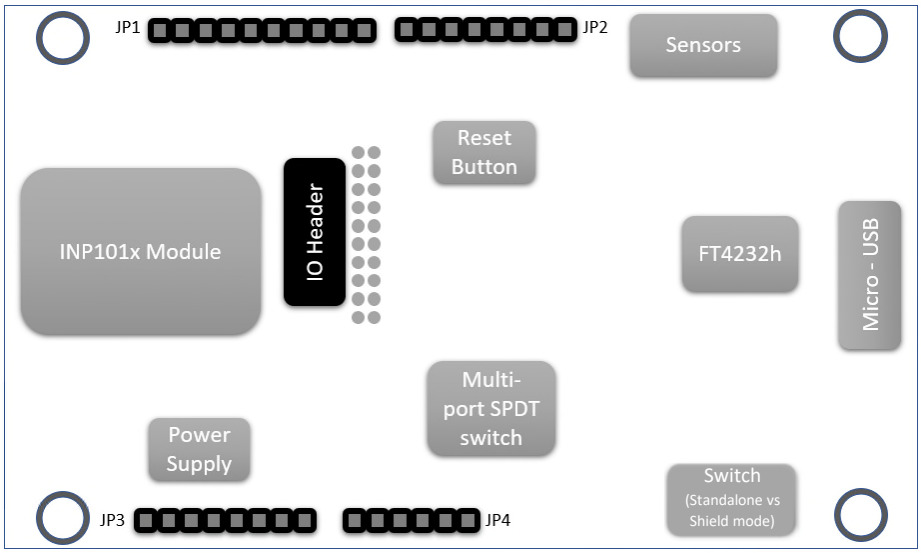

Figure 2: Block diagram of INP301x Evaluation Board

The block diagram of the INP301x Evaluation board is shown in Figure 2. The main component on the board is the INP101x module. Key features of the evaluation board are:

1. Standalone mode vs. Shield mode: Using the mode switch U3, either standalone mode or shield mode can be selected.
    a. In standalone mode, the INP101x can be accessed via micro-USB cable for programming and debugging. This mode is recommended for standalone application development.
    b. In shield mode, the INP101x module can be interfaced with any host CPU and can provide serial to Wi-Fi capabilities.
2. A peripheral IO header (J1) is available using which all the IO's of the INP101x module can be accessed.
3. Power supply section: Based on the mode, the power for module is derived from either USB or shield header. A battery header is available which can be used as power source as well.
    a. J4 at VM_3.3V for USB power
    b. J4 at VBAT and battery connect to J10 for Battery power

 ©InnoPhase, Inc. 2021

4. On board sensors are available to develop sensor to cloud applications.
5. Switch:
    a. Set U3 switch to V33_ARD for Shield mode
    b. Set U3 switch to V_3.3V for Standalone mode

 ©InnoPhase, Inc. 2021

6.2 Jumpers on the board

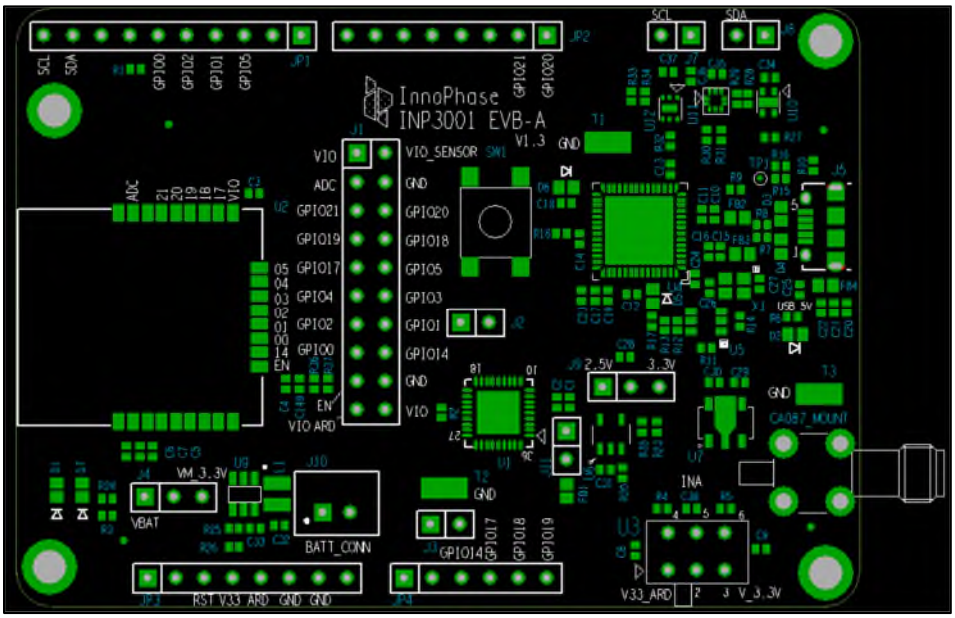

Figure 3: INP301x EVB-A control and connectivity points

Jumper	Mode and Operation
J1	IO header
J2	Used to enable Console logging in shield mode
J3	Connect LED D1 to GPIO14, for debug purposes
J4	Select power from USB or battery connector, also used for current measurements
J7	Connect SCL to GPIO4
J8	Connect SDA to GPIO3
J9	Select IO voltage for FTDI IOs
J10	Battery terminal
J11	Enable the multi-port SPDT switch
JP1 to JP4	Arduino UNO shield compatible header (3.3V support only)
U3	Switch between Stand-alone mode and Arduino Shield Mode

Table 1: Jumper Information

 ©InnoPhase, Inc. 2021

6.3 Power Supply and Mode Switch

The INP301x board is designed to supply power to the INP101x module in following ways:

1. In standalone mode, power is drawn from USB connector
2. In shield mode, power is drawn from shield connector
3. A battery header is also available to provide power to the module

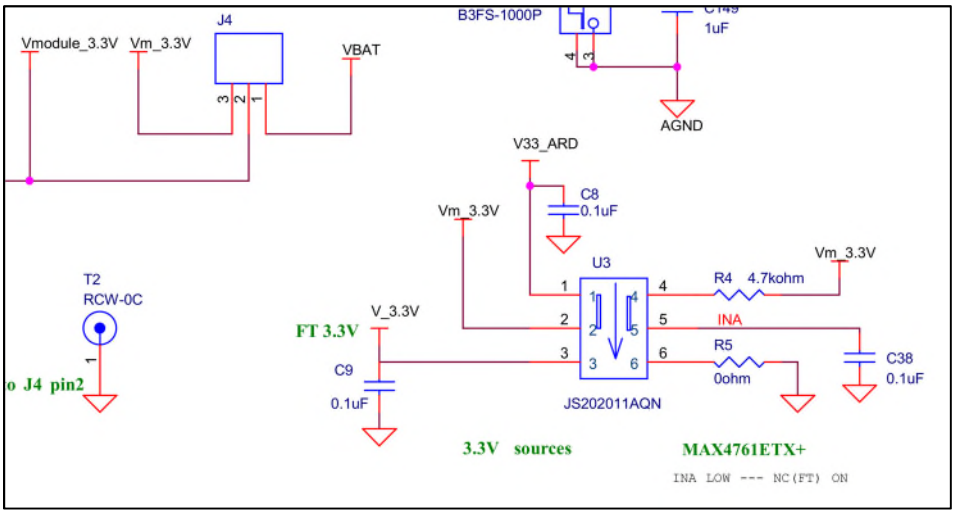

Figure 4: Power supply section

The power supply section is shown in the Figure 4. The INP101x module requires 3.3V supply. The DPDT switch (U3) selects between USB and Arduino header supply using the common net Vm_3.3V. The jumper J4 is used to select between battery supply and Vm_3.3V. The same jumper can be used for measuring current consumption of the module.

 ©InnoPhase, Inc. 2021

6.4 IO Header (J1)

The J1 header brings out all the IOs from INP101x module. These IOs can be used for debug, and/or any external interfacing needs. The pinout of this header is shown in Figure 5. To work with on board sensor, pins 1 & 2 needs to be shorted.

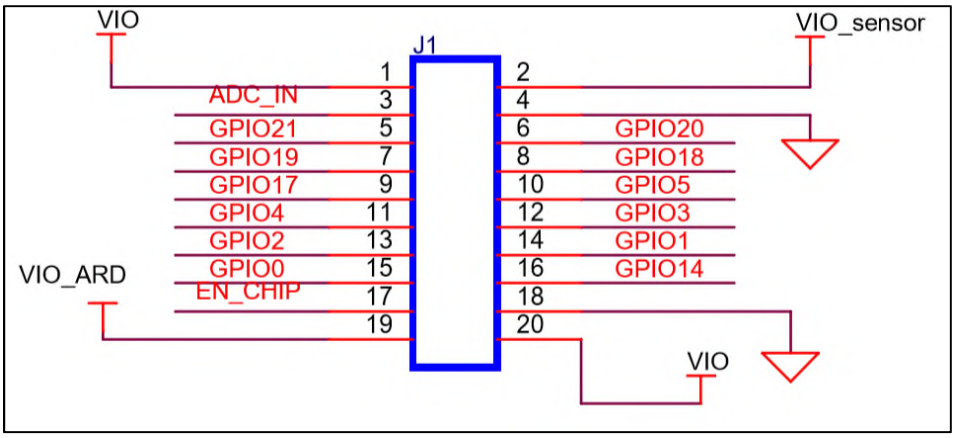

Figure 5: IO Header

 ©InnoPhase, Inc. 2021

6.5 Shield Headers (JP1 to JP4)

Arduino UNO compatible headers are available in the INP301x board to interface with any compatible host micro-controller.

The GPIOs assigned to shield headers are carefully chosen to achieve following capability:

1. INP101x's SPI slave pins available on JP1
2. INP101x's I2C master pins available on JP1
3. Remaining GPIOs are available on JP2 and JP4

Note that INP301x supports 2.5V IO as the default configuration. The shield header connections are as shown in JP2 of Figure 6.

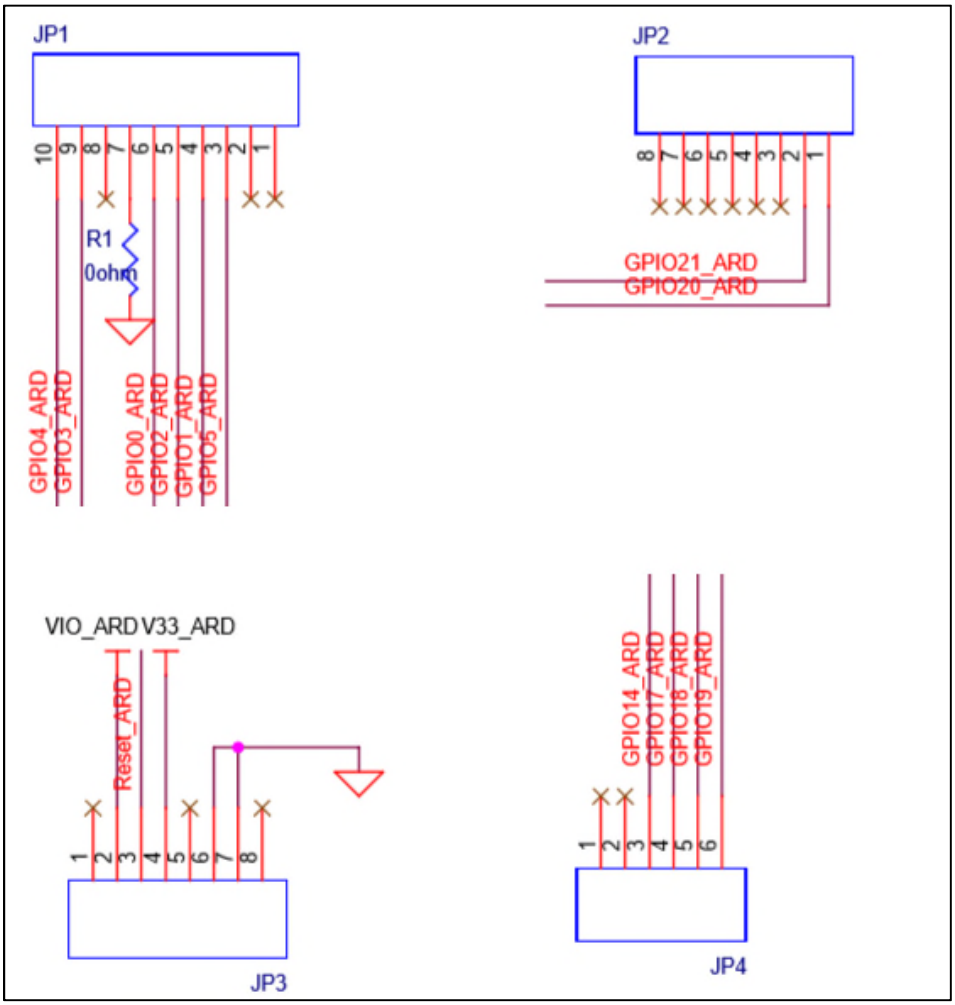

Figure 6: Arduino UNO shield compatible jumpers

 ©InnoPhase, Inc. 2021

6.6 On Board Sensors

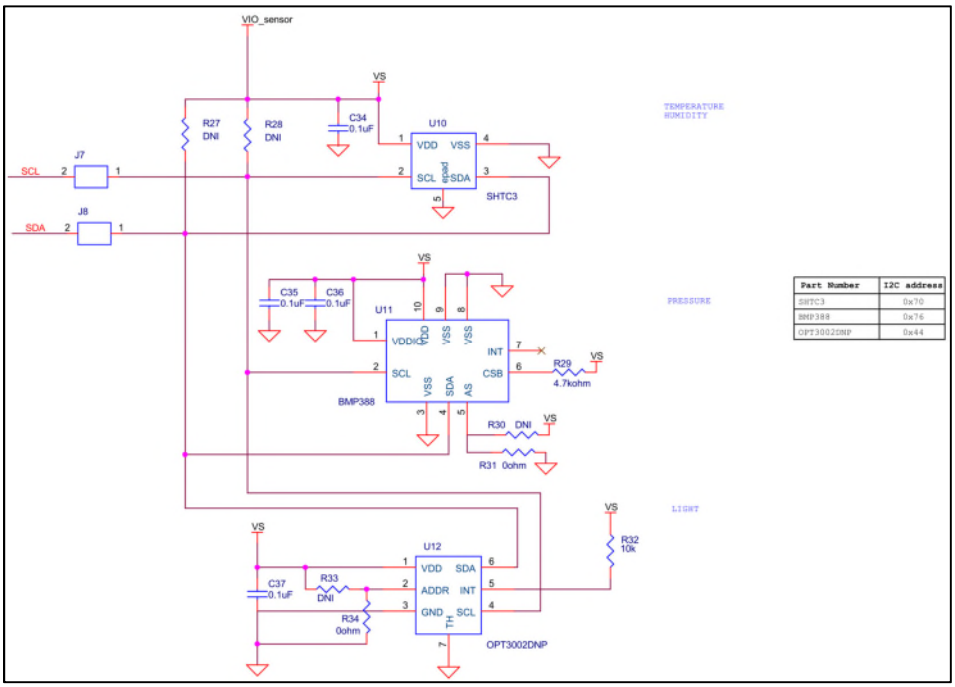

Figure 7: On board sensors

The INP301x board has following sensors available on board for quick prototyping/testing:

1. Temperature/Humidity (Sensirion SHTC3)
2. Pressure (Bosch BMP388)
3. Light (TI OPT3002)

To use the sensors, J7, J8, pins 1 & 2 of J1 should be connected. This enables power connection to the sensors on board, I2C connection on GPIOs 3 & 4.

 ©InnoPhase, Inc. 2021

7 Functional Description

Following are the functional modes that can be achieved in the INP301x board:

1. Stand-alone mode (host-less)
2. Shield mode (hosted)

More details about each mode are available in subsequent sections. Switching between the modes is handled by DPDT switch U3 for power, and multi-port SPDT switch U1 for the GPIOs.

7.1 Stand-alone mode

The stand-alone mode is intended for following use cases:

1. Host-less application development on INP101x modules
2. Programing access to INP101x modules

In stand-alone mode, the U3 switch is pushed towards pin 3, which disconnects power and IO from shield headers and connects them to FTDI. The FTDI port layout is shown in Table 2.

FTDI Bus	Interface to Talaria TWO
A	JTAG
B	RESET
C	UART
D	CONSOLE (UART)

Table 2: FTDI Layout

The A & B bus of FTDI device supports MPSEE protocol, hence JTAG is assigned to A-bus. The BDBUS7 is connected EN_CHIP of the INP101x module. The C & D bus of FTDI device used as UARTs, with C-bus connected to peripheral UART of INP101x module and D-bus connected is CONSOLE port (GPIO17) of INP101x module.

The JTAG on A-bus is used for debugging applications on the INP101x module. The UART on C-bus is used for programming the INP101x module. The CONSOLE port is a unidirectional UART from INP101x module that operates at high baud rate of 2457600, used for debug prints.

 ©InnoPhase, Inc. 2021

7.1.1 Driver Installation for Windows OS

On Windows OS, `libusbK` driver needs to be installed to communicate and control the Talaria TWO module via the FTDI device on the evaluation board. The tools/applications provided by InnoPhase will use this driver. Install/uninstall instructions for this driver is given subsequent sections.

7.1.1.1 Installation instructions for libusbK driver

Download the free software Zadig, available here: - https://zadig.akeo.ie/. Connect your Windows PC or Laptop to the evaluation board using the provided USB cable. Now, open Zadig and click on `Options`. Select `List All Devices` and deselect `Ignore Hubs or Composite Parents` as shown in Figure 8.

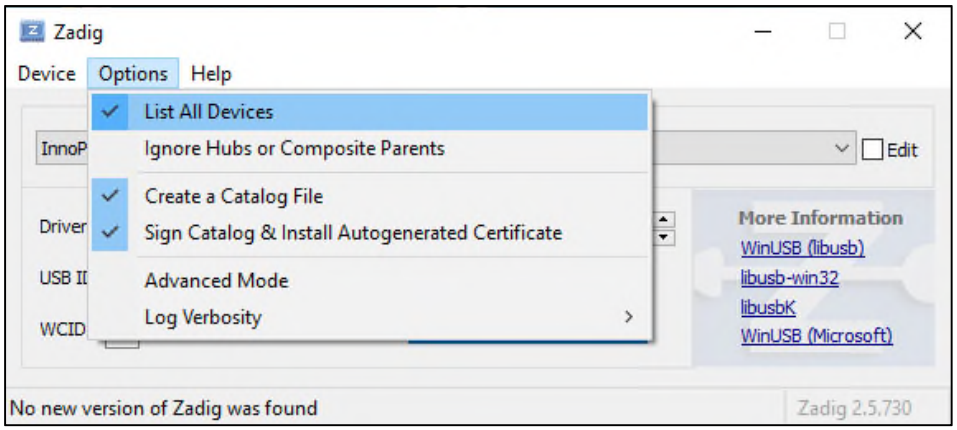

Figure 8: Listing devices in Zadig

 ©InnoPhase, Inc. 2021

To establish communication with Talaria TWO module via the FTDI device on the InnoPhase Evaluation Board, the Talaria TWO USB driver must be `libusbK`. In case the current driver is not `libusbK`, use the drop-down menu to select `libusbK` and click on `Replace Driver` which will update the drivers to `libusbK`.

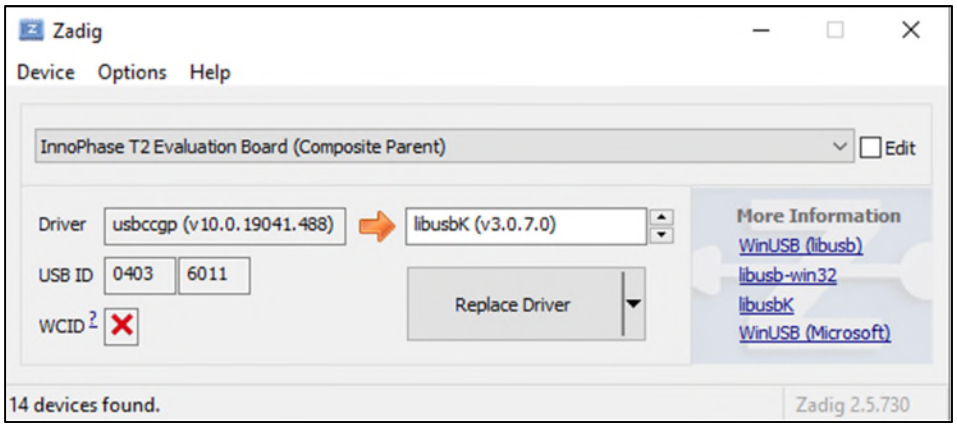

Figure 9: Updating Talaria TWO USB driver to libusbK

 ©InnoPhase, Inc. 2021

7.1.1.2 Uninstall instructions for libusbK driver

To uninstall `libusbK` and retrieve COM ports, follow the following steps:

1. Open `Device Manager`. Expand the `libusbK USB Devices` and right click on the `InnoPhase T2 Evaluation Board (Composite Parent)`. Click on `Update Driver` as shown in Figure 10.

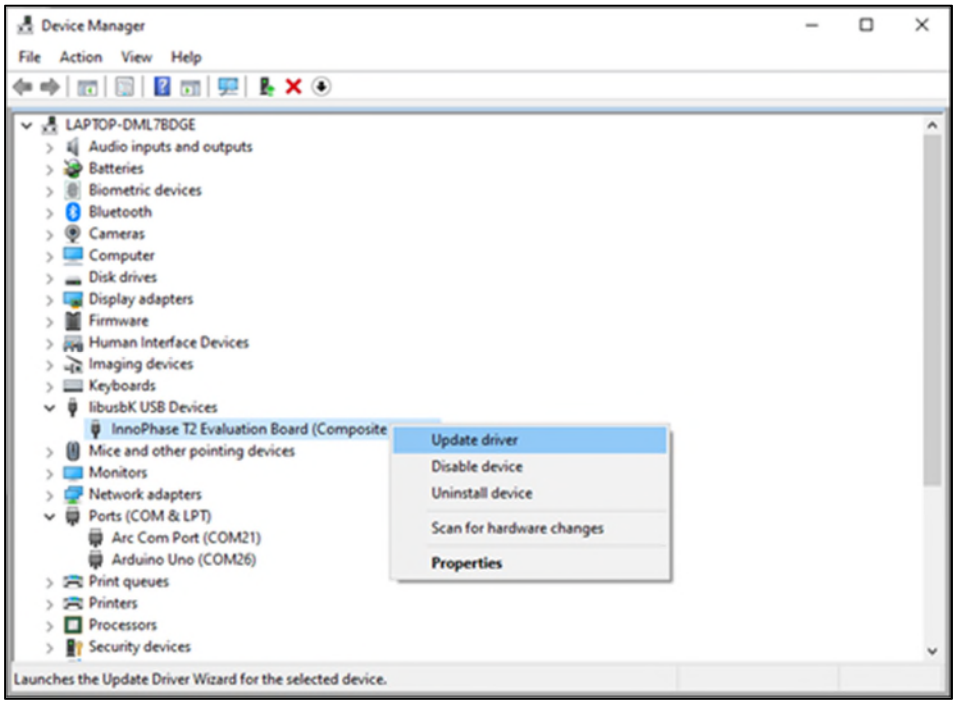

Figure 10: Device Manager

 ©InnoPhase, Inc. 2021

2. On the new window, select `Browse` computer for drivers, click on `Let me pick from a list of available drivers on my computer` option and click on `Next`.

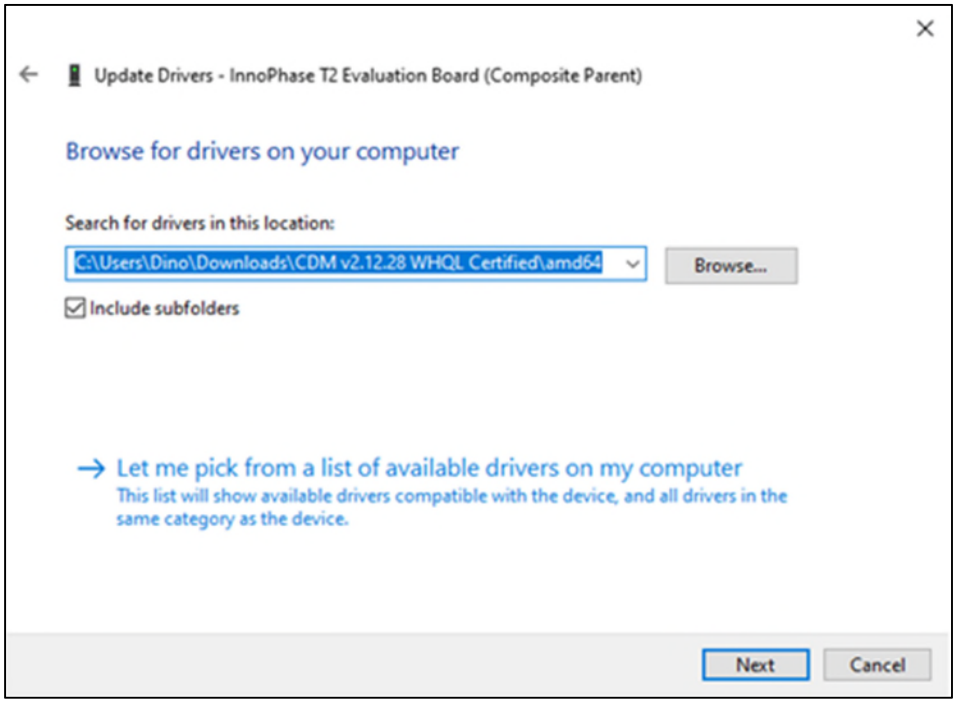

Figure 11: Update Devices

 ©InnoPhase, Inc. 2021

3. Select `USB Composite Device` and click `Next` to reinstall the COM ports.

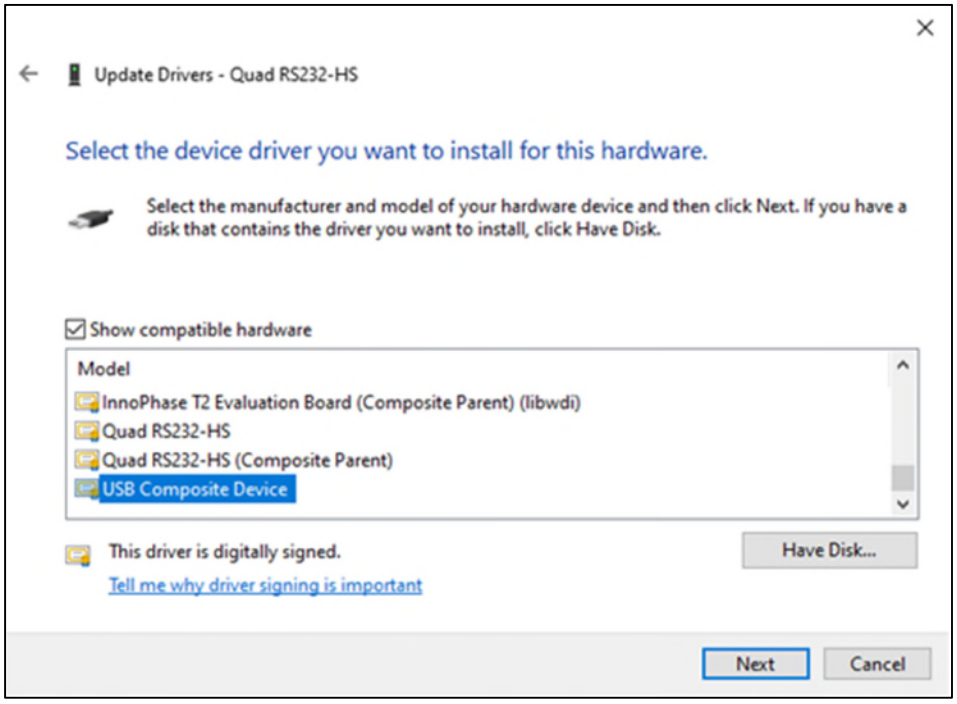

Figure 12: Select the device driver

 ©InnoPhase, Inc. 2021

7.2 Shield Mode

This mode will make the EVB-A board to act as a Wi-Fi/BLE5 shield. To enable this mode, flip the switch U3 towards V33_ARD. This also pulls up the INA pin of the multi-port SPDT device MAX4761ETX, which then routes the GPIOs from the INP101x module to the shield headers JP1, JP2, JP3 and JP4. In the shield mode a suitable firmware (such as Serial to Wi-Fi application available in the SDK) should be pre-flashed in the INP101x.

7.2.1 EVB-A as Wi-Fi Shield with STM32 Nucleo Board

A comprehensive set of host application packages are available to download via the InnoPhase website to demonstrate the use of EVB-A as a Wi-Fi/BLE5 shield board.

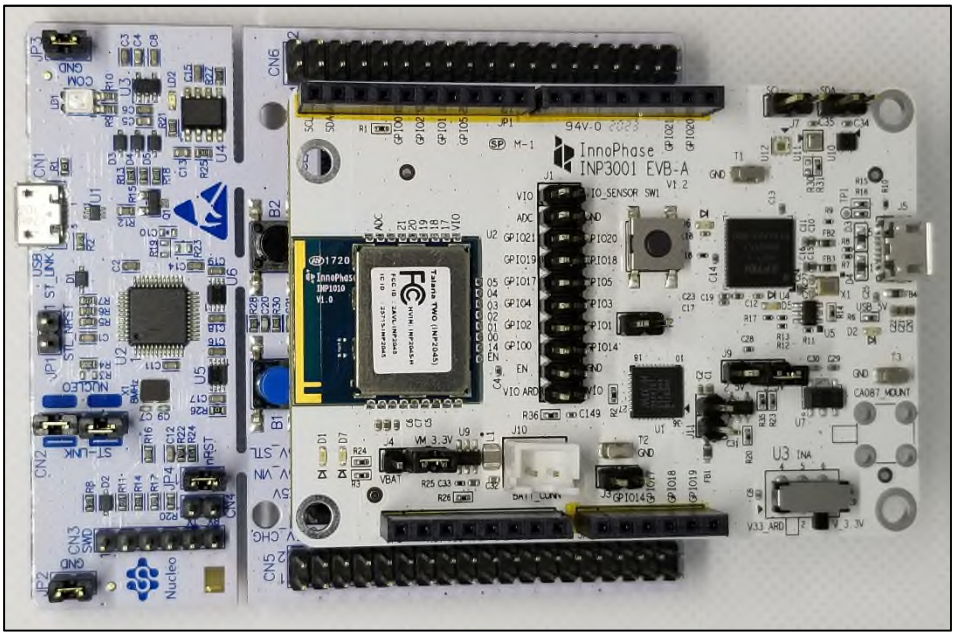

Figure 13: INP3010 EVB-A as Wi-Fi Shield

 ©InnoPhase, Inc. 2021

8 Power Measurement

The power consumption of the INP101x module is measured by either connecting a DMM on the jumper J4 or supplying power directly on J4 using specialty power supplies like Otti Arc from Qiotech. Figure 14 shows the connection setup to measure current consumption using Otti Arc.

Figure 14: Current measurement setup using Otti Arc

 ©InnoPhase, Inc. 2021

9 Using Battery as Power Source

Header J4 will switch between VBat and Vm_3.3V. Figure 15 shows VBat connection.

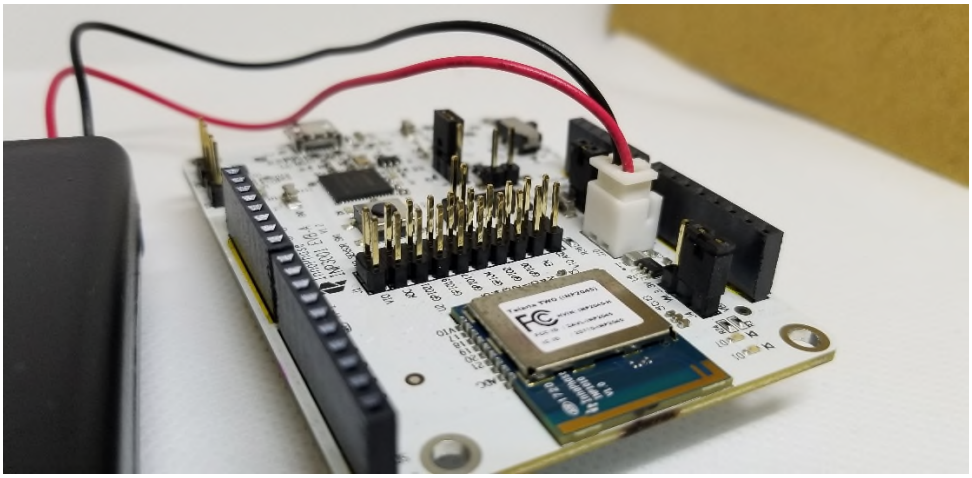

Figure 15: J10 Battery connection

Note: when using a battery as a power source there will be an additional current draw from LED (D7 or D12 depending on board version). If attempting to measure an accurate module current draw from the battery connection, the LED series resistor must be removed to disconnect the LED.

 ©InnoPhase, Inc. 2021

10 Antenna

This radio transmitter for ISED 25715-INP2045 has been approved by Innovation, Science and Economic Development Canada to operate with the antenna types listed in Table 3, with the maximum permissible gain indicated. Antenna types that are not included in this list having a gain greater than the maximum gain indicated for any type listed are strictly prohibited for use with this device.

Module ID	Antenna Type	Model Number	Max Peak Antenna Gain (dBi)
INP1010	Printed Antenna	Not Applicable	0.9
INP1011	SMA Antenna (External Antenna)	W24-ASMA-M	2.15
INP1012	SMA Antenna (External Antenna)	W24-ASMA-M	2.15
INP1013	SMD Chip Antenna	2450AT42B100	0

Table 3: Module ID with Antenna details

10.1 INP1010

Talaria TWO module has a proprietary integrated/printed antenna. It is a Double-sided Inverted F (IFA) antenna and has been implemented as printed PCB elements.

By design and verification, Antenna does not require any additional matching component if the module is used as standalone product.

Talaria TWO module's antenna has omnidirectional radiating pattern and following performance specifications:

Max (Peak) Antenna Gain	0.9 dBi
Average Antenna Efficiency	31.4%

Table 4: INP1010 - Antenna specifications

 ©InnoPhase, Inc. 2021

10.2 INP1011

This radio transmitter ISED: 25715-INP2045 has been approved by Innovation, Science and Economic Development Canada to operate with the antenna type listed in Table 5, with the maximum permissible gain indicated. Antenna types not included in this list that have a gain greater than the maximum gain indicated for any type listed are strictly prohibited for use with this device.

Module ID	Antenna Type	Model Number	Max Peak Antenna Gain (dBi)
INP1011	SMA Antenna (External Antenna)	W24-ASMA-M	2.15

Table 5: INP1011 - Antenna specifications

General features of the antenna are as follows:

1. Frequency (MHz):2400-2500
2. VSWR ≤1.5
3. Gain(dBi): 2.15
4. Return Loss (dBi): 17
5. power (W): 50
6. Input Impedance (Ω): 50
7. Antenna Length (mm): 50

 ©InnoPhase, Inc. 2021

10.3 INP1012

This radio transmitter ISED: 25715-INP2045 has been approved by Innovation, Science and Economic Development Canada to operate with the antenna type listed in Table 6, with the maximum permissible gain indicated. Antenna types not included in this list that have a gain greater than the maximum gain indicated for any type listed are strictly prohibited for use with this device.

Module ID	Antenna Type	Model Number	Max Peak Antenna Gain (dBi)
INP1012	SMA Antenna (External Antenna)	W24-ASMA-M	2.15

Table 6: INP1012 - Antenna specifications

General antenna features are as follows:

1. Frequency (MHz): 2400-2500
2. VSWR ≤ 1.5
3. Gain(dBi): 2.15
4. Return Loss (dBi): 17
5. power (W): 50
6. Input Impedance (Ω): 50
7. Antenna Length (mm): 50

 ©InnoPhase, Inc. 2021

10.4 INP1013

Talaria TWO INP1013 module has a ceramic antenna with the following performance specifications:

Max (Peak) Antenna Gain	0 dBi
Average Antenna Efficiency	26%

Table 7: INP1013 - Antenna specifications

 ©InnoPhase, Inc. 2021

11 FCC/ISED Regulatory Notices

11.1 Modification Statement

Changes or modifications made to this equipment not expressly approved by InnoPhase Inc. may void the FCC authorization to operate this equipment.

11.2 Interference Statement

This device complies with Part 15 of the FCC Rules and with Industry Canada license-exempt RSS standard(s). Operation is subject to the following two conditions:

1. this device may not cause harmful interference, and
2. this device must accept any interference received, including interference that may cause undesired operation

Le présent appareil est conforme aux CNR d'Industrie Canada applicables aux appareils radio exempts de licence. L'exploitation est autorisée aux deux conditions suivantes:

1. l'appareil ne doit pas produire de brouillage, et
2. l'appareil doit accepter tout brouillage radioélectrique subi, même si le brouillage est susceptible d'en compromettre le fonctionnement

11.3 Radio Frequency Radiation Exposure Statement

This device complies with FCC/IC radiation exposure limits set forth for an uncontrolled environment.

The device should be installed and operated with minimum distance of 20 CM between the device/antenna and all persons. This device must not be co-located or operating in conjunction with any other antenna or transmitter without further RF Exposure evaluation.

 ©InnoPhase, Inc. 2021

11.4 RF Exposure Statement for Module Integration

This module has been granted modular approval for mobile applications. Host products integrators may use the module in their final products without additional FCC certification if they meet the following conditions. Otherwise. additional FCC approvals must be obtained.

1. The host product with the module installed must be evaluated for simultaneous transmission requirements
2. The user manual for the host product must clearly indicate the operating requirements and conditions that must be observed to ensure compliance with current FCC IC RF exposure guidelines.

 ©InnoPhase, Inc. 2021

11.5 Labeling Requirements for the Host Device

The host device shall be properly labelled to identify the module within the host device. The certification label of the module shall be clearly visible at all times when installed in the host device, otherwise the host device must be labelled to display the FCC ID and IC of the module, preceded by the words "Contains transmitter module", or the word "Contains", or similar wording expressing the same meaning, as follows:

1. Contains FCC ID: 2AVAL-INP2045
2. Contains IC: 25715-INP2045

L'équipement hôte doit être correctement étiqueté pour identifier les modules dans l'équipement. L'étiquette de certification du module doit être clairement visible en tout temps lorsqu'il est installé dans l'hôte, l'équipement hôte doit être étiqueté pour afficher le FCC ID et IC du module, précédé des mots "Contient le module émetteur", ou le mot "Contient", ou un libellé similaire exprimant la même signification, comme suit:

1. Contient FCC ID: 2AVAL-INP2045
2. Contient IC: 25715-INP2045

 ©InnoPhase, Inc. 2021

11.5.1 INP1010

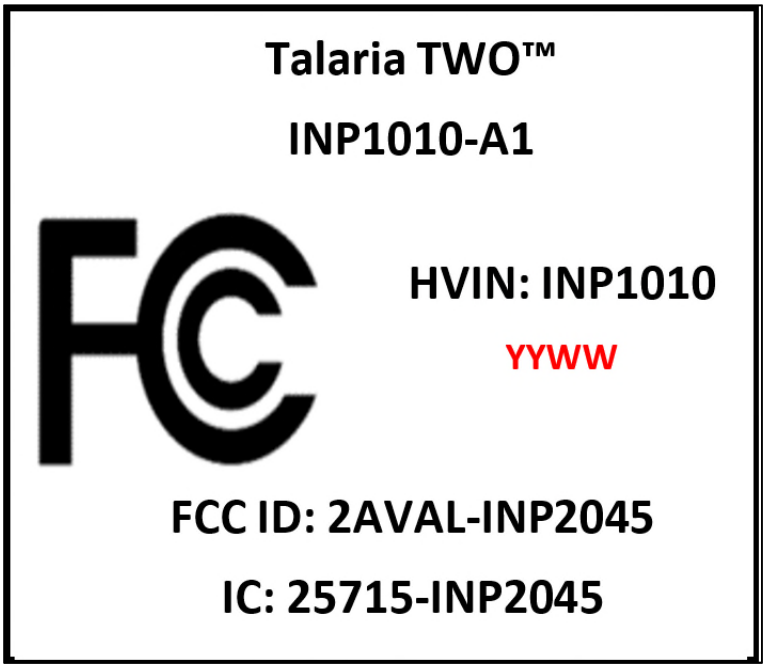

Figure 16: Labelling requirement - INP1010

11.5.2 INP1011

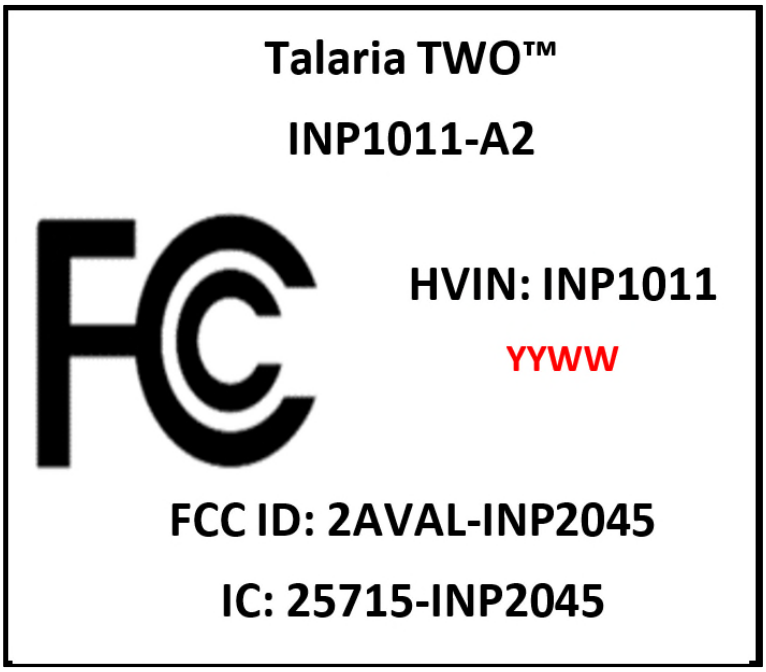

Figure 17: Labelling requirement - INP1011

 ©InnoPhase, Inc. 2021

11.5.3 INP1012

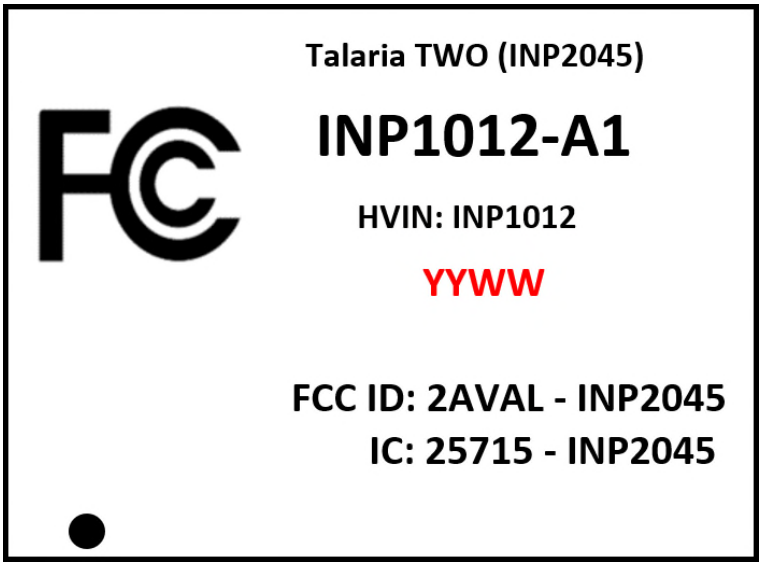

Figure 18: Labelling requirement - INP1012

11.5.4 INP1013

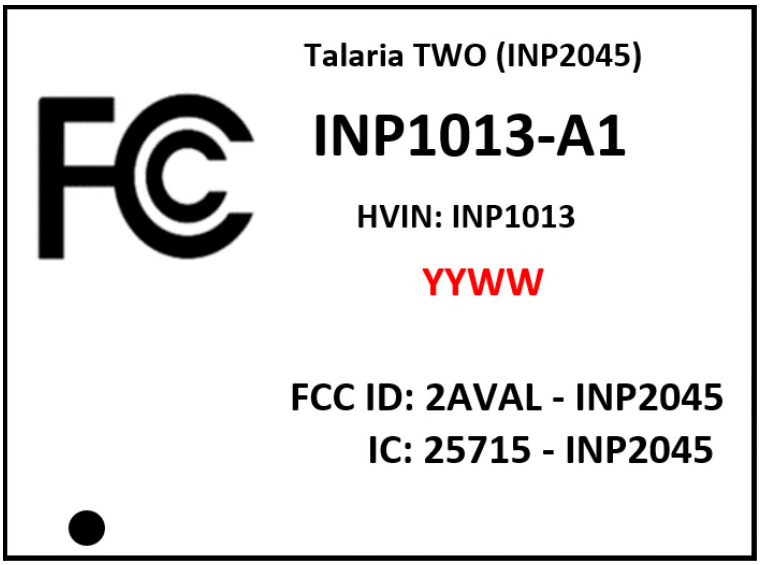

Figure 19: Labelling requirement - INP1012

 ©InnoPhase, Inc. 2021

12 Support

1. Sales Support: Contact an InnoPhase sales representative via email – sales@innophaseinc.com
2. Technical Support:
    a. Visit: https://innophaseinc.com/contact/
    b. Also Visit: https://innophaseinc.com/talaria-two-modules
    c. Contact: support@innophaseinc.com

InnoPhase is working diligently to provide outstanding support to all customers.

 ©InnoPhase, Inc. 2021

13 Disclaimers

Limited warranty and liability — Information in this document is believed to be accurate and reliable. However, InnoPhase Incorporated does not give any representations or warranties, expressed or implied, as to the accuracy or completeness of such information and assumes no liability associated with the use of such information. InnoPhase Incorporated takes no responsibility for the content in this document if provided by an information source outside of InnoPhase Incorporated.

InnoPhase Incorporated disclaims liability for any indirect, incidental, punitive, special or consequential damages associated with the use of this document, applications and any products associated with information in this document, whether or not such damages are based on tort (including negligence), warranty, including warranty of merchantability, warranty of fitness for a particular purpose, breach of contract or any other legal theory. Further, InnoPhase Incorporated accepts no liability and makes no warranty, express or implied, for any assistance given with respect to any applications described herein or customer product design, or the application or use by any customer's third-party customer(s).

Notwithstanding any damages that a customer might incur for any reason whatsoever, InnoPhase Incorporated' aggregate and cumulative liability for the products described herein shall be limited in accordance with the Terms and Conditions of identified in the commercial sale documentation for such InnoPhase Incorporated products.

Right to make changes — InnoPhase Incorporated reserves the right to make changes to information published in this document, including, without limitation, changes to any specifications and product descriptions, at any time and without notice. This document supersedes and replaces all information supplied prior to the publication hereof.

Suitability for use — InnoPhase Incorporated products are not designed, authorized or warranted to be suitable for use in life support, life-critical or safety-critical systems or equipment, nor in applications where failure or malfunction of an InnoPhase Incorporated product can reasonably be expected to result in personal injury, death or severe property or environmental damage. InnoPhase Incorporated and its suppliers accept no liability for inclusion and/or use of InnoPhase Incorporated products in such equipment or applications and such inclusion and/or use is at the customer's own risk.

All trademarks, trade names and registered trademarks mentioned in this document are property of their respective owners and are hereby acknowledged.

 ©InnoPhase, Inc. 2021