EMOTIVA®

BASX PT1 & TA1

Stereo Preamp/DAC/Tuner & Stereo Integrated Amp/DAC/Tuner

User Manual

Important Safety Precautions and Explanation of Symbols

The exclamation point within an equilateral triangle is intended to alert the user to the presence of important installation, operation, and service instructions in this manual.

The lightning flash with arrowhead symbol within an equilateral triangle is intended to alert the user to the presence of uninsulated dangerous voltages within the enclosure that may be of sufficient magnitude to constitute a risk of electrical shock to the user.

Please read this manual thoroughly before attempting to install, configure, or operate the BasX PT1 Stereo Preamp/DAC/Tuner or BasX TA1 Stereo Integrated Amp/DAC/Tuner. After successful installation and configuration of the PT1 or TA1, be sure to retain this manual in a safe place for future reference.

Safety is a key component to a long lasting and trouble free installation. Please read and follow all instructions and heed all warnings on the PT1 or TA1 and in this manual. The vast majority of the subsequent safety precautions are common sense. If you are not comfortable with the installation of audio/video entertainment equipment, you should seek the services of a qualified installation professional or call us for help.

WARNING: TO REDUCE THE RISK OF FIRE OR ELECTRIC SHOCK, DO NOT USE THE PT1 OR TA1 NEAR WATER OR IN WET LOCATIONS, DO NOT EXPOSE IT TO RAIN OR MOISTURE, DO NOT EXPOSE IT TO DRIPPING OR SPLASHING FROM OTHER SOURCES, AND ENSURE THAT NO OBJECTS FILLED WITH LIQUIDS (SUCH AS VASES) ARE PLACED ON IT. DOING SO MAY RESULT IN DAMAGE TO THE UNIT AND THE RISK OF ELECTRIC SHOCK, WHICH MAY RESULT IN BODILY INJURY OR DEATH.

WARNING: TO REDUCE THE RISK OF ELECTRIC SHOCK, DO NOT REMOVE THE COVER FROM THE PT1 OR TA1. THERE ARE NO USER-SERVICEABLE PARTS INSIDE THE UNIT. REFER ALL SERVICE TO QUALIFIED SERVICE PERSONNEL.

Do not install the PT1 or TA1 near or above any heat sources such as radiators, heating vents, or other apparatus' that produce heat. Do not block any ventilation openings or heat sinks. Avoid installing the unit directly above other heat-producing equipment unless sufficient ventilation or forced-air cooling is provided.

Do not install the PT1 or TA1 in locations without proper ventilation. The PT1 or TA1 should not be operated on a bed, sofa, rug, or similar surface that may block vents. The unit should not be installed in an enclosed location such as a bookcase, cabinet, or closed equipment rack unless sufficient forced-air ventilation is provided.

Always install your PT1 or TA1 according to the manufacturer's instructions and only use attachments or accessories specified by the manufacturer.

Do not install the PT1 or TA1 on any stand, shelf, or other piece of furniture that is unable to support its weight. If a cart is used to move the unit, use caution to avoid injury from tip-over.

Connect the PT1 or TA1 only to power sources of the correct voltage (as shown in this manual and on the PT1 or TA1 unit).

Protect power supply cables from being pinched, walked on, or otherwise damaged. Be especially careful where the power cable enters the power outlet and the unit.

Only connect the PT1 or TA1 to an electrical outlet or extension cord of appropriate type and rating.

DO NOT defeat the safety purpose of a grounding or polarized plug by removing ground pins or using unsafe adapters. A polarized plug has two blades - one wider than the other. A grounding plug has a third ground prong in addition to the two main conductors. The wide blade or third groundling prong is provided for your safety. If the provided plug does not fit your outlet, consult an electrician to replace your obsolete outlet. If you replace the power cord, only use one of similar type and equal or greater current rating.

The power cable for the PT1 or TA1 should be unplugged from the outlet during severe electrical storms, or when unused for a long period of time.

Only replace the fuse(s) in the PT1 or TA1 with fuse(s) of proper value and voltage rating.

The PT1 or TA1 should only be cleaned as directed in the manual. Avoid spraying liquids directly onto the unit and NEVER spray liquids into the vents. Care should be taken so that small objects do not fall into the inside of the unit.

You should seek service for your PT1 or TA1 by qualified service personnel if any of the following occur:

1. The power-supply cord or the plug has been damaged.
2. Objects or liquid have fallen or spilled into the vents.
3. The unit has been exposed to rain.
4. The unit exhibits a marked change in performance.
5. The unit has been dropped, or its enclosure or chassis is damaged.

NOTE: TO COMPLETELY DISCONNECT THE PT1 or TA1 FROM THE AC POWER MAINS, DISCONNECT THE AC POWER CORD FROM THE AC RECEPTACLE.

NOTE: THE POWER CORD ON THE PT1 or TA1 MUST REMAIN READILY ACCESSIBLE AT ALL TIMES.

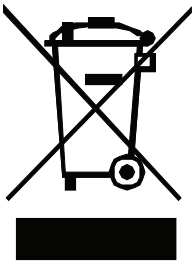

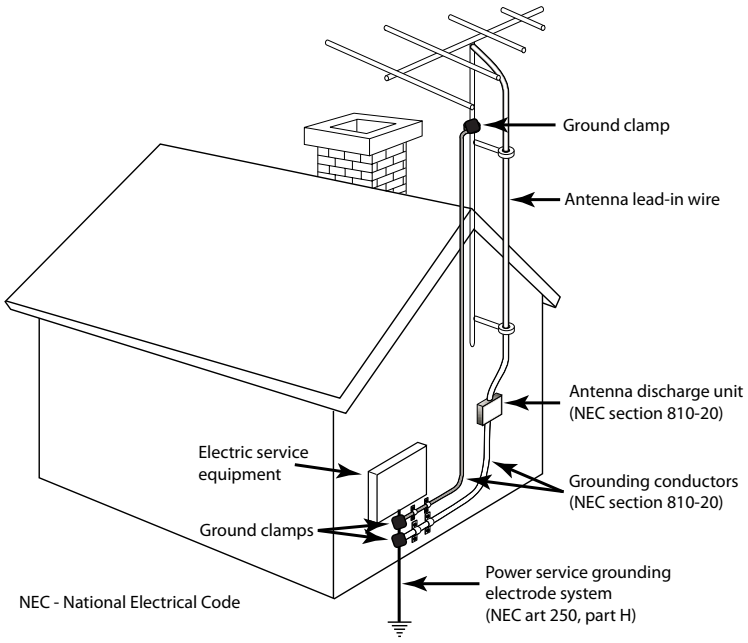

FCC Statement

1. This device complies with Part 15 of the FCC Rules. Operation is subject to the following two conditions:

(1) This device may not cause harmful interference, and

(2) This device must accept any interference received, including interference that may cause undesired operation.

2. Changes or modifications not expressly approved by the party responsible for compliance could void the user's authority to operate the equipment.

NOTE: This equipment has been tested and found to comply with the limits for a Class B digital device, pursuant to Part 15 of the FCC Rules. These limits are designed to provide reasonable protection against harmful interference in a residential installation.

This equipment generates uses and can radiate radio frequency energy and, if not installed and used in accordance with the instructions, may cause harmful interference to radio communications. However, there is no guarantee that interference will not occur in a particular installation. If this equipment does cause harmful interference to radio or television reception, which can be determined by turning the equipment off and on, the user is encouraged to try to correct the interference by one or more of the following measures:

- Reorient or relocate the receiving antenna.
- Increase the separation between the equipment and receiver.
- Connect the equipment into an outlet on a circuit different from that to which the receiver is connected.
- Consult the dealer or an experienced radio/TV technician for help.

Radiation Exposure Statement

This equipment complies with FCC radiation exposure limits set forth for an uncontrolled environment. This equipment should be installed and operated with minimum distance of 20 cm between the radiator & your body.

BasX PT1 and BasX TA1

Contents

Important Safety Precautions and Explanation of Symbols
FCC Statement
BasX PT1 and BasX TA1 1
Introduction 3
About This Manual 4
Features 5
Unpacking 7
Quick Start 8
BasX PT1 and BasX TA1 Front Panel 9
BasX PT1 Rear Panel 10
BasX TA1 Rear Panel 13
BasX PT1 and BasX TA1 Remote Control 16
BasX PT1 and BasX TA1 Display and Menu System 18
Basic Controls and Operation 19
The BasX PT1 and TA1 Menu 20
Connections 25
Care and Maintenance 28
Specifications For Both PT1 and TA1 29
Emotiva Audio Corporation Three-Year Limited Warranty 31
Accessories 34
Notes 35

Introduction

Thank you for purchasing your new BasX PT1 or TA1.

Our BasX product line is dedicated to the philosophy that high-quality products that deliver true audiophile sound quality don't need to be expensive to buy or complicated to configure and enjoy. Every model in the BasX product line offers all of the essential features you need to maximize your listening enjoyment.

The BasX PT1 is a high performance stereo preamplifier that includes an internal stereo FM tuner, inputs for two line level analog sources, a built-in DAC with plenty of digital inputs for all of your digital audio sources, including a high-resolution asynchronous USB input, and a built-in AptX capable Bluetooth input, and a high performance phono preamp that supports both moving magnet and moving coil cartridges. The PT1 can be operated via the simple front panel controls, or by the included infrared remote control. The intuitive menu system makes the PT1simple to configure and operate, and the large bright blue VFD display on the front panel is easy to read, and shows you exactly what's going on at all times. You can connect the output of the PT1 to a power amp to run a pair of high-quality full range speakers, or a pair of powered loudspeakers, or utilize the built-in active crossover to add a powered subwoofer.

The TA1 offers the same performance, advanced features, and menu system as the PT1 - but adds a powerful internal Class A/B audiophile quality stereo amplifier. Simply connect a pair of high quality loudspeakers to the TA1 for a great sounding stereo system, or use the internal active bass management crossover to add a powered subwoofer, to create an even more powerful 2.1 channel system. And, like the PT1, the TA1 also has a line level main output you can use to connect to an external power amp.

Of course, like every product in the BasX series, the BasX PT1 and TA1 include one critical feature that you won't find in most other components in their price range: really great sound. The BasX PT1 and TA1 are true audiophile components, designed and built by audiophiles, to deliver the kind of really great sound quality that both audiophiles and ordinary folks expect in a high-end audio system.

Happy listening!

The Emotiva Team

About This Manual

This manual will provide you with all the information you need to get started enjoying your BasX PT1 or BasX TA1.

We suggest that you read through the entire manual; we kept things as short and direct as possible. Even if you're an expert user, you will probably find some interesting information and useful suggestions.

If you're really in a hurry to get started, please read the Quick Start section (on page 8); you may then read the remainder of the manual at your leisure.

You may wish to keep a copy of this manual with your records, and record serial numbers or other purchase information on the Notes page at the back.

Features

The BasX PT1 is a high performance stereo preamplifier that includes an internal stereo FM tuner, inputs for two line level analog sources, a built-in DAC with plenty of digital inputs for all of your digital audio sources, a built-in Bluetooth input, and a high performance phono preamp that supports both moving magnet and moving coil cartridges. The BasX TA1 has the same features and performance as the PT1 - but adds a powerful audiophile quality stereo amplifier.

Features of the BasX PT1 and BasX TA1:

- **Top quality parts and construction** - Double sided FR4 circuit boards with plated through holes, SMD construction, and high quality parts throughout, ensure that your BasX PT1 or TA1 will deliver years of reliable service.
- **Highly optimized circuit layout** – ensures the best possible sound quality, with low distortion, wide bandwidth, and a virtually silent noise floor.
- **Sensitive FM tuner** – features 15 station presets and a Mono mode to help make even weak stations listenable.
- **High performance phono preamp** – The built-in phono preamp delivers excellent performance, and sounds superb, with both Moving Magnet and Moving Coil cartridges.
- **A full complement of analog inputs** – including two line level inputs and a high performance phono input that supports both moving coil and moving magnet cartridges.
- **A full complement of digital inputs** – including one 24/192k asynchronous USB input, both 24/192 coax and optical S/PDIF inputs, and a built-in Bluetooth receiver.
- **Pure analog signal path for analog inputs** – Analog inputs on the BasX PT1 and TA1 follow a pure analog signal path and are never converted into the digital domain. All switching and Volume and Tone control is accomplished in the analog domain.
- **Precision digital conversion** – Digital inputs are routed through the legendary Analog Devices AD1955 24/192 DAC for conversion into the analog domain for accurate and great sounding digital audio performance.
- **Bass, Treble, and Balance Controls** – Bass and Treble controls provide a familiar way to adjust your system to sound just the way you like it. And our unique balance control simultaneously adjusts the levels of both channels so the overall sound level in your room remains constant.
- **Large blue VFD display and flexible menu system** – The large blue VFD display is easy to read, gives you all the information you need about how your PT1 or TA1 is configured, and can be fully dimmed for intimate listening. The flexible menu system offers easy access to all important features and makes menu navigation a breeze.
- **Mute control** – allows you to mute the audio output on your system, and then return precisely to your previous listening level, at the push of a knob or the click of a button.

- **Separate headphone output with intelligent headphone level control** – A separate, high current, direct coupled headphone amplifier provides a high quality signal to drive your favorite headphones for personal listening. The intelligent level feature independently remembers the levels you set for your headphones and your main outputs.
- **Subwoofer output and active bass management** – Both the PT1 and TA1 include both full range outputs and optional bass managed outputs. The bass managed outputs have a fixed 90 Hz crossover frequency and feature true active 12 dB / octave Linkwitz-Riley high-pass and low-pass filters.
- **Full function remote control** – lets you operate all of the controls without getting out of your favorite listening seat. Quick access buttons allow you to quickly switch between the FM Tuner and your last used digital and analog inputs.
- **Heavy steel 2RU chassis with milled aluminum face plate** - provides strength and rugged good looks.
- **Universal AC line voltage operation** - The BasX PT1 has a universal-voltage power supply that can operate on anything from 100 VAC to 240 VAC. The BasX TA-1 has a powerful linear main power supply, which is designed to operate on either 115 VAC or 230 VAC at 50/60 Hz, and automatically detects and configures itself to operate with your local line voltage.
- **Full three year warranty** - ensures that you'll be able to enjoy your BasX PT1 or TA1 for years to come.

Features unique to the BasX TA1:

- **Powerful audiophile quality Class A/B amplifier** – The powerful audiophile quality Class A/B amplifier in the BasX TA1 delivers 50 watts/channel into 8 Ohms, or 80 watts/channel into 4 Ohms, with vanishingly low distortion, flat frequency response, and an excellent S/N ratio..
- **Separate preamp output** – Even though the BasX TA-1 includes its own internal amplifiers, it also provides preamp outputs, which can be used at the same time as the internal amplifiers. This allows you to use the TA1 as a preamp and control center with a separate external power amplifier. (You can also operate both an external amplifier and the internal amplifiers in the TA1 at the same time to power multiple zones or multiple sets of speakers in your main zone.)
- **Subwoofer output and active bass management** – Both the PT1 and TA1 offer both full range and bass-managed preamp outputs. The TA1 also offers the option of full active bass management with the internal amps - where the bass management system sends the high-pass filtered portion of the signal to the internal amplifiers and the low-pass filtered portion of the signal to an external powered subwoofer via the subwoofer output.

You can find more information about the BasX PT1, the BasX TA1, and the entire BasX line of products on our website at:

www.emotiva.com.

Unpacking

Your BasX PT1 or TA1 was carefully packed and should reach you in perfect condition. If you notice any shipping damage or other issues when you unpack it, please contact Emotiva immediately.

Gently remove your BasX unit from the packing carton and remove all wrappings and shipping material.

It is important to save the box and all packing materials in case your BasX unit ever needs to be moved or shipped back to the factory for service.

We truly value customer feedback and would like to hear from you.

Quick Start

To get the most from your BasX PT1 or BasX TA1 we urge you to read the entire manual. If you just can't wait to listen to it, this section will cover the basics you need to get started.

- Find a secure location for your BasX PT1 or TA1.
- Connect your BasX PT1 to a set of speakers and an amplifier and / or subwoofer, or connect your BasX TA1 to a set of speakers, and add a separate powered subwoofer if you like. (Refer to the Connections section of the manual for details.)
- Find some music you *really* like to listen to.
- Turn on the AC Power switch and turn up the volume a bit!
- Enjoy!

While you're enjoying your BasX PT1 or TA1, it would be a great time to read the rest of the manual to learn more about it.

BasX PT1 and BasX TA1 Front Panel

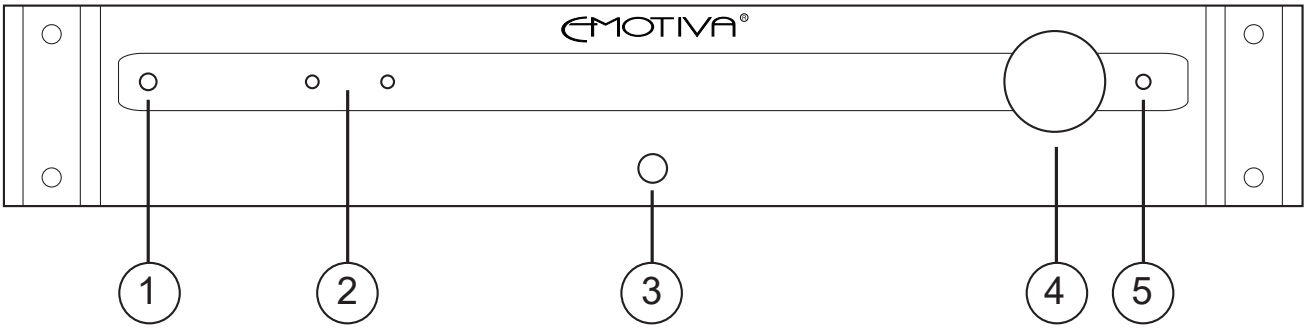

1. Headphone Jack

Use this jack to connect a pair of high-quality headphones.

Note: The Main Outputs are muted when headphones are inserted.

Note: The intelligent level control on the PT1 and TA1 independently stores and remembers the levels for your Main Outputs and your Headphones. When you unplug your headphones, your speakers will return to their previous level, and when you reconnect your headphones, they will return to their previous level.

2. Input Buttons

In normal operation, these buttons are used to select which Input to listen to. (They perform different functions when you're in the Setup Menu; see the Setup Menu section for details.)

3. Power / Standby Button

This button is used to toggle the PT1 and TA1 between Standby and On modes. When the unit is fully Off nothing on the front panel will be illuminated. When the unit is in Standby the Standby LED will be lit amber. When the unit is On, the Standby LED will be dark, the VFD will be lit, and small blue legends beside the Headphone Jack and Input Buttons will be illuminated.

Note: The PT1 and TA1will only operate when the AC Power Switch on the rear panel is On. When the AC Power Switch is turned On, the Standby Indicator will light amber; at which point pressing the Standby button will turn the unit On.

4. Volume Knob

In normal operation, this knob is used to control the Volume on the unit. (It performs slightly different functions when you're in the Setup Menu; see the Setup Menu section for details.)

5. Standby LED

When the unit is in Standby the Standby LED will be lit amber. When the unit is fully Off, or when the unit is On, the Standby LED will not be lit.

BasX PT1 Rear Panel

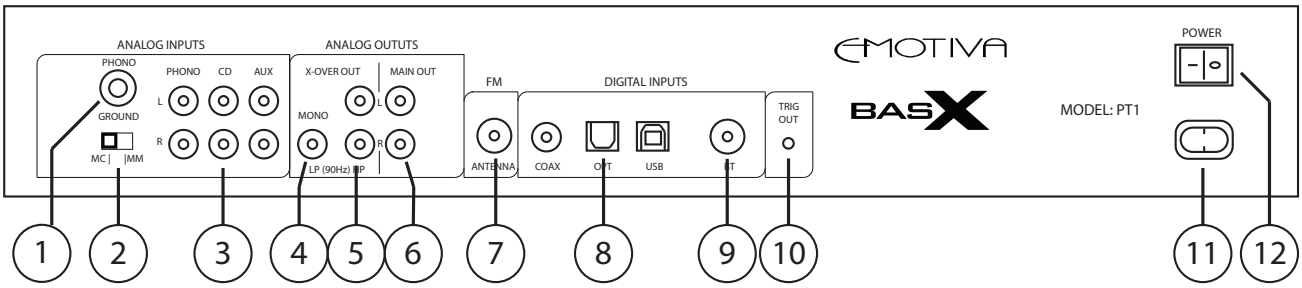

1. Phono Input Ground Lug

Connect the ground lead from your turntable to this lug to avoid or eliminate hum problems.

Note: Some turntables may not provide a separate ground lead. You may also find that, even on some turntables that provide a ground lead, you get less hum when it is disconnected.

2. Phono Input Gain Selector

Use this switch to set the gain of the phono input to match the output of your cartridge. Normally this switch should be set to MM for a moving magnet cartridge, and to MC for a moving coil cartridge.

Note: The manufacturers of some phono cartridges may instruct you to set the gain switch to MM for a "high output moving coil cartridge"; always follow manufacturer's recommendations.

3. Analog Inputs (Phono Input & Line Level Stereo Inputs)

Use the Phono Input to connect the output from your turntable.

Note: The Phono Input is intended to accept the low-level output from a moving magnet or moving coil phono cartridge, and includes RIAA phono equalization. DO NOT connect a line level source to this input or the sound will be distorted and you may damage the Phono Input. If your turntable has a built-in phono preamp, and provides a line level output, then you should connect it to one of the line level inputs (CD or Aux).

The CD and Aux inputs are unbalanced line level inputs, and may be used to connect a stereo line level signal from any analog stereo audio source. The CD and Aux inputs are similar, and either may be used to connect any component that delivers a standard line level audio signal.

4. Summed Subwoofer Output (With Active Low-Pass Filter)

This output allows you to connect a powered subwoofer to the PT1 via the 90 Hz active low-pass filter portion of the internal bass management crossover.

5. Crossover Outputs (With Active High-Pass Filters)

These Main Outputs provide a signal that has been routed through the 90 Hz active high-pass filter portion of the internal active bass management crossover.

6. Main Outputs (Full Range)

These outputs provide a full range stereo output signal and should be connected to the unbalanced input on your power amplifier. These outputs provide a standard level signal which is compatible with virtually all audio power amplifiers (or a line level input on a preamp or integrated amplifier.

7. FM Antenna Input

Connect an FM Antenna to this input to allow the FM tuner to receive FM radio stations. The included FM antenna will provide reasonable reception in strong signal areas.

Note: Connecting an external FM antenna to your PT1 will usually allow you to receive more FM stations, and improve the signal strength on weak stations. You will also find that changing the position and orientation of the antenna will often have significant effect on how many distant stations you receive, and on the strength and signal quality of even local stations.

8. Digital Audio Inputs

The PT1 provides several different digital audio inputs to accommodate a variety of digital audio sources.

- The Coax input accepts PCM electrical S/PDIF digital audio signals up to 24/192k. This input is often used to connect the digital audio output from a CD player or Blu-Ray disc player. This input ONLY accepts STEREO PCM audio signals.
- The Optical input accepts PCM optical S/PDIF digital audio signals - often referred to as Toslink - up to 24/192k. This input is used to connect the Toslink output from a TV, disc player, or media player. This input ONLY accepts STEREO PCM audio signals.
- The asynchronous USB input accepts digital audio from a computer or other digital audio source that supports USB. It supports standard stereo PCM digital audio up to 24/192k.

Note: The USB audio input on the PT1 utilizes an asynchronous USB Audio Class 2 type input, which can be connected directly to Windows 10 computers, and to Apple computers with standard USB audio outputs. In order to use this input with a Windows 10 computer you will need to download and install our free USB audio driver - which you can download from the Emotiva Lounge (our Forum). You will not need to install a driver to use this input with Apple computers that offer standard USB audio outputs. However, some Apple devices, including most that use IOS, will reauire the use of a special Apple USB hardware adapter.

9. Bluetooth Antenna Connector

Connect the included Bluetooth antenna to this connector.

10. Trigger Output

A 12 VDC signal is sent from the Trigger Output of the PT1 to turn on other devices when the PT1 is turned on. This signal can be used to turn on other trigger-enabled audio equipment - such as a power amplifier.

11. Power Cord Receptacle

Use this receptacle to attach the included power cable for the PT1.

12. AC Power Switch

Switches the main AC power to the PT1 On and Off. When this switch is Off, no controls operate, and the PT1 cannot be turned On by the front panel Standby Button or remote control.

BasX TA1 Rear Panel

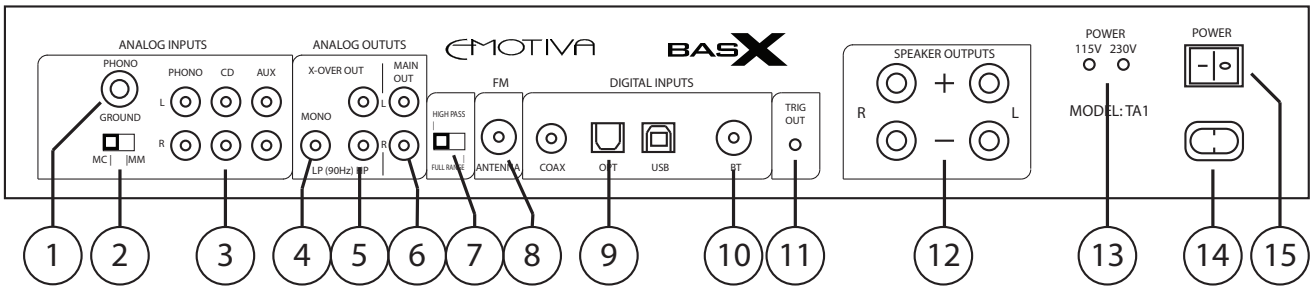

1. Phono Input Ground Lug

Connect the ground lead from your turntable to this lug to avoid or eliminate hum problems.

Note: Some turntables may not provide a separate ground lead. You may also find that, even on some turntables that provide a ground lead, you get less hum when it is disconnected.

2. Phono Input Gain Selector

Use this switch to set the gain of the phono input to match the output of your cartridge. Normally this switch should be set to MM for a moving magnet cartridge, and to MC for a moving coil cartridge.

Note: The manufacturers of some phono cartridges may instruct you to set the gain switch to MM for a "high output moving coil cartridge"; always follow manufacturer's recommendations.

3. Analog Inputs (Phono Input & Line Level Stereo Inputs)

Use the Phono Input to connect the output from your turntable.

Note: The Phono Input is intended to accept the low-level output from a moving magnet or moving coil phono cartridge, and includes RIAA phono equalization. DO NOT connect a line level source to this input or the sound will be distorted and you may damage the Phono Input. If your turntable has a built-in phono preamp, and provides a line level output, then you should connect it to one of the line level inputs (CD or Aux).

The CD and Aux inputs are unbalanced line level inputs, and may be used to connect a stereo line level signal from any analog stereo audio source. The CD and Aux inputs are similar, and either may be used to connect any component that delivers a standard line level audio signal.

4. Summed Subwoofer Output (With Active Low-Pass Filter)

This output allows you to connect a powered subwoofer to the TA1 via the 90 Hz active low-pass filter portion of the internal bass management crossover.

5. Crossover Outputs (With Active High-Pass Filters)

These outputs provide a signal that has been routed through the 90 Hz active high-pass filter portion of the internal active bass management crossover.

6. Main Outputs (Line Level)

These are the line level Main Outputs on your TA1. When the Crossover Switch is set to Full Range they provide a full range signal; when the Crossover Switch is set to High Pass they deliver a signal that is passed through the 90 Hz active high-pass filter portion of the internal active bass management crossover.

7. High-Pass / Full Range Crossover Switch

THIS SWITCH CONTROLS BOTH THE SIGNAL THAT IS SENT TO THE MAIN LINE LEVEL OUTPUTS AND THE SIGNAL THAT IS SENT TO THE INTERNAL AMPLIFIERS.

When this switch is set to Full Range both the Speaker Outputs and the Main Outputs receive a full range stereo signal. When this switch is set to High-Pass both the Speaker Outputs and the Main Outputs receive a signal that has been routed through the active high-pass filter portion of the internal crossover on the TA1.

Note: The High-Pass setting is normally used when the speakers connected to the Speaker Outputs on the TA1 are being used with an active subwoofer in a full 2.1 channel system.

8. FM Antenna Input

Connect an FM Antenna to this input to allow the FM tuner to receive FM radio stations. The included FM antenna will provide reasonable reception in strong signal areas.

Note: Connecting an external FM antenna to your TA1 will usually allow you to receive more FM stations, and improve the signal strength on weak stations. You will also find that changing the position and orientation of the antenna will often have significant effect on how many distant stations you receive, and on the strength and signal quality of even local stations.

9. Digital Audio Inputs

The TA1 provides several different digital audio inputs to accommodate a variety of digital audio sources.

- The Coax input accepts PCM electrical S/PDIF digital audio signals up to 24/192k. This input is often used to connect the digital audio output from a CD player or Blu-Ray disc player. This input ONLY accepts STEREO PCM audio signals.
- The Optical input accepts PCM optical S/PDIF digital audio signals - often referred to as Toslink - up to 24/192k. This input is used to connect the Toslink output from a TV, disc player, or media player. This input ONLY accepts STEREO PCM audio signals.
- The asynchronous USB input accepts digital audio from a computer or other digital audio source that supports USB. It supports standard stereo PCM digital audio up to 24/192k.

Note: The USB audio input on the TA1 utilizes an asynchronous USB Audio Class 2 type input, which can be connected directly to Windows 10 computers, and to Apple computers with standard USB audio outputs. In order to use this input with a Windows 10 computer you will need to download and install our free USB audio driver - which you can download from the Emotiva Lounge (our Forum). You will not need to install a driver to use this input with Apple computers that offer standard USB audio outputs. However, some Apple devices, including most that use IOS, will reauire the use of a special Apple USB hardware adapter.

10. Bluetooth Antenna Connector

Connect the included Bluetooth antenna to this connector.

11. Trigger Output

A 12 VDC signal is sent from the Trigger Output of the TA1 to turn on other devices when the TA1 is turned on. This signal can be used to turn on other trigger-enabled audio equipment - such as a power amplifier.

12. Power Cord Receptacle

Use this receptacle to attach the included power cable for the TA1.

13. AC Power Switch

Switches the main AC power to the TA1 On and Off. When this switch is Off, no controls operate (the TA1 power amp cannot be turned On from the front panel or remote control).

BasX PT1 and BasX TA1 Remote Control

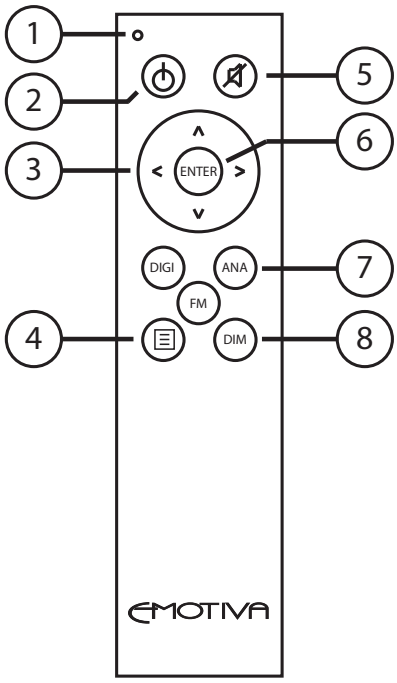

1. Transmit LED

This LED will flash red whenever a button on the remote control is pressed.

2. Power Button

This button is used to toggle the PT1 or TA1 between Standby and On modes.

Note: The Remote Control will only operate when the AC Power Switch on the rear panel of the unit is On.

3. Navigation Ring / Buttons

In normal operation, pressing the Left and Right arrows will switch Inputs, and the Up and Down arrows will raise and lower the Volume. When the Setup Menu is engaged, the arrows are used for menu navigation.

4. Menu Button

This button toggles the Setup Menu on and off.

5. Mute Button

Press this button to mute the audio output; press it again to return the audio to its previous level.

6. Enter Button

This button is used for menu navigation.

7. Input Select Buttons

Digi - The first time this button is pressed it selects the last used Digital Input. Each time you press it after that will sequence through the available Digital Inputs.

Ana - The first time this button is pressed it selects the last used Analog Input. Each time you press it after that will sequence through the available Analog Inputs.

FM - The first time this button is pressed it selects the FM Tuner and the last FM Preset that was used. Each time you press it after that will sequence through the available FM Presets.

SPECIAL NOTE: Tuning FM Stations and Setting FM Presets Using the Remote Control

The BasX PT1 and TA1 have a special feature that allows you to directly tune FM stations, and to easily assign stations to FM Presets, using the remote control. This feature is activated when you use the FM BUTTON on the remote control to switch to the Tuner input.

Once you have selected the Tuner Input by pressing the FM BUTTON on the remote control...

- Pressing the FM Button repeatedly will sequence through the available FM Presets.

- Pressing the Left navigation button will cause the Tuner to seek DOWN to the next station.
- Pressing the Right navigation button will cause the Tuner to seek UP to the next station.

- Pressing the ENTER button on the remote control will cause the currently tuned station to be saved to the currently selected FM Preset.

Note: THIS FEATURE CAN ONLY BE ACCESSED BY USING THE REMOTE CONTROL.
The Volume control and Mute function on the remote control and the front panel, and the Input buttons on the front panel, will all continue to function normally.

8. Dim Button

This button sets the brightness of the display by sequencing through the available steps.
(Steps are 0%, 20%, 40%, 60%, 80%, 100%.)

WARNING: The PT1 and TA1 remote control uses some codes which conflict with the control codes used by our XMC and RMC processors. Using a PT1 or TA1 remote control within operating range of an XMC or RMC processor, or using a processor remote control within range of a PT1 or TA1, may result in unexpected responses from the other unit.

BasX PT1 and BasX TA1 Display and Menu System

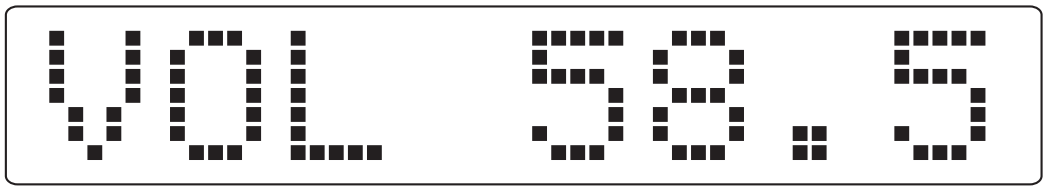

The BasX PT1 and TA1 feature a large, bright, easy to read VFD (vacuum fluorescent display) which keeps you informed of the current status at all times.

In normal operation, this display shows the currently selected Input.

When you change the Volume setting, the display switches to display the Volume setting for several seconds, then returns to showing the currently selected Input. The display also sometimes momentarily displays other useful information - like the sample rate of the signal coming into a digital input when you select it.

When the PT1 or TA1 is turned on, it always returns to same Input and Volume setting as when it was turned off. The only exception to this is that, as a safety feature, if the unit is turned off while set to a very high Volume setting, it will restart at a maximum Volume level of 62. If you turn the PT1 or TA1 off while it's in the Setup Menu, when you turn it on it will start up in normal operating mode.

When you turn the unit on, the display will show a welcome message, then briefly display the Volume setting that was current when the unit was turned off. The Volume setting will then return to zero and ramp up to the previous Volume setting that was shown.

The BasX PT1 and TA1 also have a Setup Menu, which is used to configure various system options, like the brightness of the display, to configure and access the Tuner Presets, and to adjust the Bass, Treble, and Balance settings. The Setup Menu is accessed by pressing and holding the Volume knob on the front panel, or by pressing the Menu Button on the remote control. Pressing the Volume knob briefly, or pressing the Mute button on the remote control, toggles the Mute function on and off.

Note: THE SETUP MENU WILL OFFER DIFFERENT OPTIONS DEPENDING ON WHICH INPUT IS SELECTED WHEN YOU ENTER THE MENU SYSTEM. TUNER OPTIONS will ONLY appear in the Setup Menu if the Tuner Input is selected when you enter the Menu System.

Basic Controls and Operation

Refer to pages 9 - 17 for the location of the controls and buttons on the BasX PT1 and BasX TA1 and details about how each control operates..

The first thing to do after connecting your BasX PT1 or TA1 is to turn the rear panel Power switch On. Once you turn on the Power switch, the Standby LED will illuminate amber to indicate that your unit is now in Standby mode.

Once your unit is in Standby mode you may turn it fully On by pressing the Power button on the remote control or the Power / Standby button on the front panel. When you press either button the unit will go through its startup sequence:

- the Standby LED will extinguish
- the front panel VFD display will first display the Emotiva logo
- the VFD will then display the name of the unit
- the VFD will then display the currently selected input
- the VFD will then display the Volume setting that was stored when it was turned Off
- the Volume display will then reset to 0 and then ramp up to the stored Volume setting
- finally the VFD display will return to displaying the name of the currently seleted Input

The lowest Volume setting on the BasX PT1 and BasX TA1 is 00.0
The maximum Volume setting on the BasX PT1 and BasX TA1 is 80.0
The Volume control moves in steps of 0.5 (21.0, 21.5, 22.0, etc.)

The BasX PT1 and TA1 have a safety limit on the initial Volume ramp up.
If the stored Volume setting is above 62.0 the ramp up will stop at a setting of 62.0

Once the unit has completed its power up sequence you may select which input to listen to by:

- using the Left / Right Input Buttons on the front panel
- using the Left / Right navigation buttons on the remote control
- using the Analog, Digital, and FM direct access buttons on the remote control

You may turn the Volume Up or Down on your BasX PT1 and TA1 by using either the front panel Volume knob or the Up and Down navigation buttons on the remote control. As you change the Volume the current Volume setting will be displayed on the front panel VFD. The VFD will return to displaying the currently selected Input a few seconds after the Volume stops changing. If the front panel VFD is fully dimmed, it will illuminate to display the Volume or Input when you change them, then switch off again after a few seconds.

The BasX PT1 and TA1 also have an audio Mute function. Press the Volume knob or the Mute button on the remote control to temporarily mute the audio. The VFD will flash “mute” to indicate that the unit is muted. When the unit is muted, pressing either the Volume knob or button again will toggle the Mute mode off.

To return the unit to Standby mode simply press the Power button on the remote control or the Power / Standby button on the front panel.

Note: It’s OK to turn the unit off using the Power switch without first going to Standby mode.

The BasX PT1 and TA1 Menu

The Menu system in the BasX PT1 and TA1 may be entered either by pressing the Menu Button on the remote control or by pressing and holding the Volume knob. The options available in the Menu will be different depending on whether the FM Tuner Input is selected when you enter the Menu system.

The following Menu Tree shows all of the Setup Menu options.

The options in the areas shown with a shaded background will ONLY be visible if you enter the Menu System while the Tuner Input is selected.

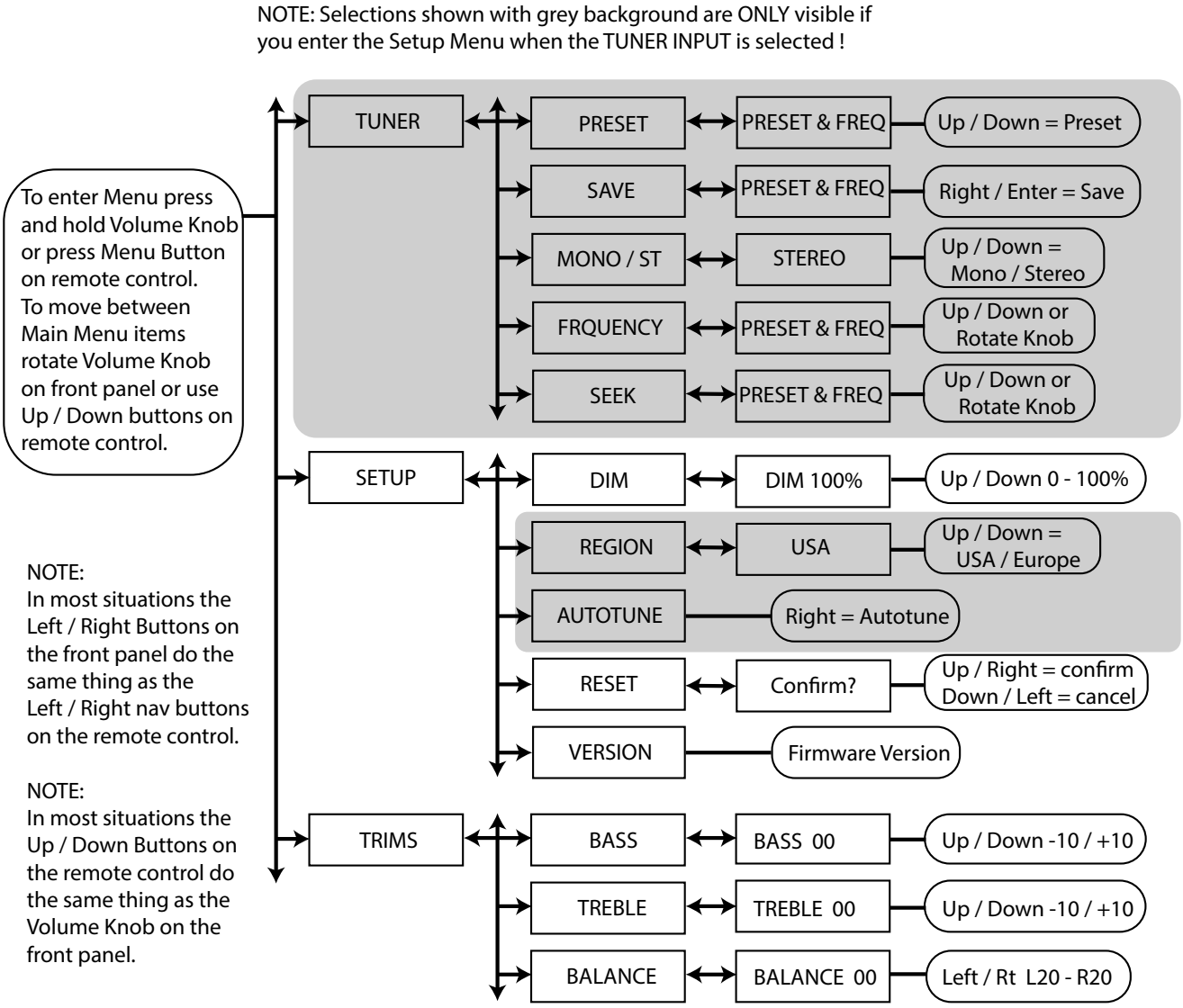

Refer to the Menu Tree on page 20 while reading the following section.

To use the Menu System with the remote control:

- enter the Menu System by pressing the Menu button
- navigate the Menu System using the Up / Down / Left / Right buttons on the Navigation Ring
- press the Menu button again to exit the menu
- (you can also exit the Menu System using the Left navigation button)

To use the Menu System with the front panel controls:

- enter the Menu System by pressing and holding the Volume knob for several seconds
- navigate the Menu System using the Left / Right Input buttons for left / right movement and using the Volume knob for up / down movement
- exit the Menu System by pressing and holding the Volume knob for several seconds
- (you can also exit the Menu System using the Left Input button)
- (there is also an automatic timeout that will exit the Menu System after several seconds)

Note: You will have different menu choices depending on which Input is selected when you enter the Menu System. The Tuner Section of the top menu, and the Region and Autotune Options in the Setup Section of the menu, will ONLY be visible if you enter the Menu System while the TUNER INPUT is selected.

The Trims Section

The Trims Section of the Menu System gives you access to the Bass, Treble, and Balance trims.

Once you enter the Trims Section you may select either Bass, Treble, or Balance.
Once the item you wish to view or change is selected:

- press the Right button to display the current setting for that item
- once the current value is displayed you may adjust it
- adjust the item by using either the Up / Down arrow buttons or the Volume knob
- when you have completed your adjustment return to the Trims Section using the Left arrow
- (your new setting will be retained when you return to the Trims Section)

Bass and Treble values range from -10 to +10.
Balance - Allows you to adjust the Balance settings range from L20 to R20.

The Setup Section

The Setup Section of the Menu System gives you access to the Dim, Reset, and Version options.
In addition the Setup Section also includes the Region and Autotune tuner options.
(These options will only be visible if the Tuner Input was selected when you entered the Menu.)

Once you enter the Setup Section you may select the item you wish to view or adjust.
Once the item you wish to view or change is selected:

- press the Right button to display the current setting for that item
- once the current value is displayed you may adjust it
- adjust the item by using either the Up / Down arrow buttons or the Volume knob
- when you have completed your adjustment return to the Setup Section using the Left arrow
- (your new setting will be retained when you return to the Setup Section)

Dim - Allows you to configure the brightness of the front panel VFD display.
(Options include 0%, 20%, 40%, 60%, 80%, and 100%.)

Reset - Resets all configuration settings and Tuner Presets to their factory default settings.
(After selecting this option you will be prompted to confirm your choice.)

Version - Displays the current firmware version.

Region - Configures the FM tuner for use in the USA or European region.
(Pre-emphasis and de-emphasis are applied to the FM audio signal to reduce noise. There are two standards, and you will get the most accurate sound reproduction if you pick the correct one for your area. For the USA and Canada, select USA; the Europe setting is correct for most other areas... or just select the one that sounds the best to you.)

Autotune - When you select this option the FM Tuner in your unit will scan through the FM frequency band and preload as many strong stations as it can detect into the FM tuner's 15 station presets. After pressing the Right button to start the Autotune process, it will proceed and complete automatically.

Note: Using Autotune will ERASE your current FM Station Presets and replace them with the stations found by the signal scan.

The Tuner Section

The Tuner Section of the Menu System gives you access to the functions necessary to program and configure the FM Tuner Presets. (The entire Tuner Section will ONLY be visible if the Tuner Input was selected when you entered the Menu System.)

Preset - Allows you to choose which Tuner Preset station to listen to.

Press the Right button to see the currently selected Preset; use the Volume knob or Up / Down arrow buttons to change to a different Preset; use the Left Button to exit when you're done.

Save - Allows you to save the currently selected frequency to a Tuner Preset.

Press the Right button to select Save; the current Frequency and Preset will be shown. Use the Volume knob or Up / Down buttons to select the Preset you wish to save; the currently selected combination of Frequency and Preset will be continuously displayed. Press the Right button to save the displayed Frequency to the displayed Preset.

Mono/St - Instructs the tuner to play a weak FM station in monaural.

Because of the way FM broadcasts are encoded, stereo FM broadcasts often exhibit an unacceptably high amount of background noise if the signal is too weak. If this occurs, switching the decoder to monaural mode will often improve the signal quality significantly. This may enable you to receive more stations in "listenable quality".

Press the Right button to enter the Menu item, use the Up / Down buttons or Volume knob to select Mono or Stereo; use the Left Button to exit when you're done.

Note: The Mono/St setting ONLY affects stereo FM broadcasts. It has no effect on monaural FM boradcasts and does NOT convert other types of stereo audio inputs to monaural.

Frequency - Allows you to manually tune your favorite FM station.

Press the Right button to select Frquency; the current Frequency and Preset will be shown. Use the Volume knob or Up / Down buttons to select the Frequency; the currently selected combination of Frequency and Preset will be continuously displayed.

Seek - Instructs the FM Tuner to scan the FM band looking for the next strong station.

Press the Right button to select the Seek function; then use the Up / Down buttons, or rotate the Volume knob to the left or right, to command the FM Tuner to seek up or down to the next strong station. The Tuner will stop at the next strong station it detects.

Using The FM AutoTune Feature

When you select this option the FM Tuner in your unit will scan through the FM frequency band and preload as many strong stations as it can detect into the FM tuner's 15 station presets. After pressing the Right button to start the Autotune process, it will proceed and complete automatically.

Note: Using Autotune will ERASE your current FM Station Presets and replace them with the stations found by the signal scan.

Configuring FM Station Presets

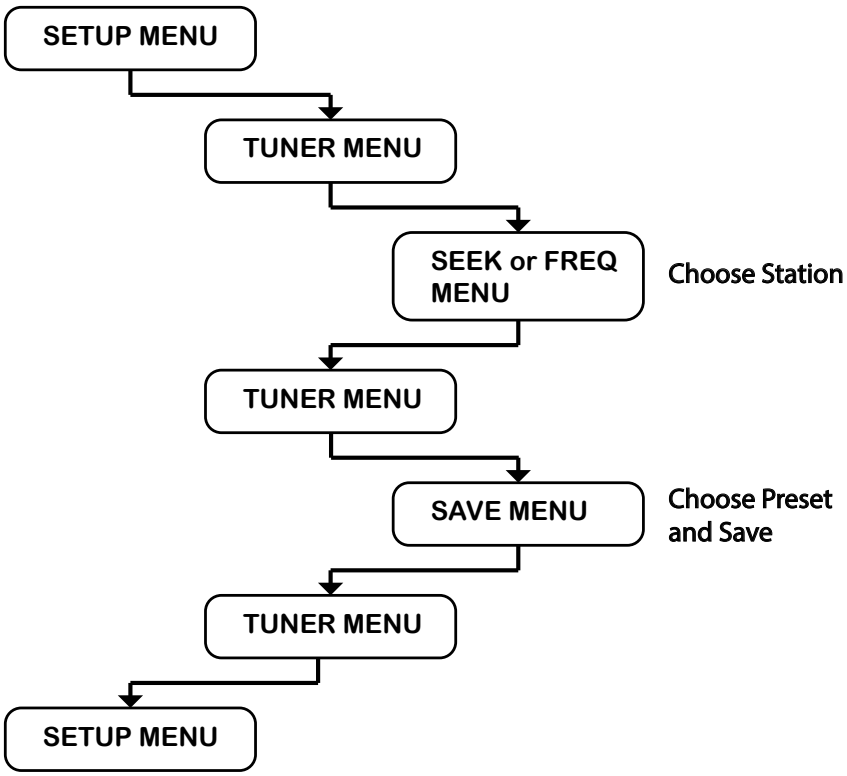

The procedure to configure FM Tuner Presets on the BasX PT1 and BasX TA1 is relatively straightforward.

1) Enter the Tuner Section of the Setup Menu.

2) Select the FM station you wish to program (using either the Frequency or Seek option).
- select Frequency and manually tune the Frequency of the station you wish to program
- select Seek and allow the Seek function to find a strong station for you
- return to the Tuner Section of the Menu after selecting your station

3) Select the St/Mono option (if you have chosen a weak noisy station).
- set the St / Mono option to Mono to set the station you chose to monaural reception

4) Select the Save option.
- press the Right arrow or Right button to display the current Frequency and Preset
- use the Volume knob or Up / Down arrows to select the FM Preset you wish to save
- press the Right arrow again to SAVE the currently shown Preset and Frequency combination

The following info-graphic explains the process in more detail...

1

SELECT TUNER INPUT.
- use Left / Right buttons on front panel
- use Left / Right buttons on remote control

Display shows current PRESET and FREQUENCY

2

ENTER SETUP MENU.
- press and hold Volume knob
- press Menu button on remote control

Display shows TUNER

3

ENTER TUNER SETUP OPTIONS MENU.
- press Right button on front panel
- press Right button on remote control

Display shows PRESET (Tuner Setup Options Menu)

4a

SELECT SEEK FROM THE TUNER SETUP OPTIONS MENU TO AUTOMATICALLY FIND A STATION.
- use the Up / Down buttons or the Volume knob to select the SEEK option
- press the Right button on the front panel or remote control to activate SEEK
- turn the Volume knob to the Right or press the Up button on the remote control to SEEK UP
- turn the Volume knob to the Left or press the Down button on the remote control to SEEK DOWN
- the display will show frequency and stop at the next strong station
- when the desired station is shown press the Left button to return to the Tuner Setup Options Menu

Display shows SEEK

Display changes to show PRESET and FREQUENCY

OR

4b

SELECT FREQUENCY FROM THE TUNER SETUP OPTIONS MENU TO MANUALLY TUNE TO A STATION.
- use the Up / Down buttons or the Volume knob to select the FREQUENCY option
- press the right Button on the front panel or remote control to activate MANUAL TUNING
- use the Volume knob or the Up / Down buttons on the remote control to manually tune a station
- the display will show the currently tuned frequency
- when the desired station is shown press the Left button to return to the Tuner Setup Options Menu

Display shows FREQUENCY

Display changes to show PRESET and FREQUENCY

4c

SELECT MONO/STEREO MODE FROM THE TUNER SETUP OPTIONS MENU.
(this step is optional - the default mode is Stereo)
- use the Volume knob or the Up / Down buttons to select the MONO/ST option
- press the Right button on the front panel or remote control to activate MONO/STEREO mode
- use the Volume knob or the Up / Down buttons on the remote control to select Mono or Stereo
- the display will show the currently selected mode
- press the Left button to select the mode currently displayed and return to the Tuner Setup Options Menu

Display shows MONO/ST

Display changes to show Mono or Stereo during set operation.

5

SELECT SAVE FROM THE TUNER SETUP OPTIONS MENU TO SAVE YOUR STATION TO A PRESET.
- use the Up / Down buttons or the Volume knob to select the SAVE option
- press the Right button on the front panel or remote control to activate the SAVE option
- use the Volume knob or the Up / Down buttons on the remote control to select a PRESET
- press the Right button on the front panel or remote control to SAVE the displayed FREQUENCY and PRESET
- use the Left button to return to the Tuner Setup Options Menu

Display shows PRESET and FREQUENCY

NOTE: Choices must be entered promptly.
There are time-outs that will return you to the Main Menu if you hesitate too long between choices.
NOTE: The TUNER SETUP OPTIONS MENU will ONLY appear if you enter the SETUP MENU while the TUNER is the selected Input.
NOTE: The MONO/ST option allows you to force weak stereo stations to play in monaural - which may improve the S/N ratio on some weak stations.

Connections

Connecting an amplifier and speakers to your BasX PT1

To connect your PT1 to a separate power amplifier connect the Left and Right Main Outputs on the PT1 to the unbalanced inputs on your power amplifier using good quality audio interconnects.

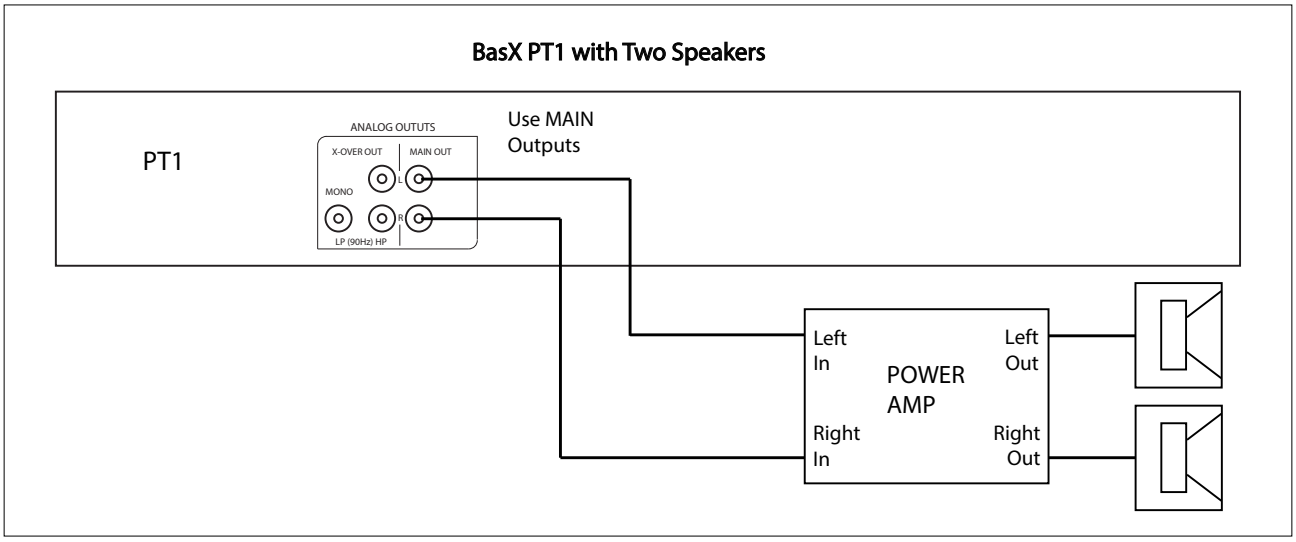

Connecting an amplifier and subwoofer to your BasX PT1

To connect your PT1 to a separate power amplifier and subwoofer, connect the Left and Right HP Xover-Out on the PT1 to the unbalanced inputs on your power amplifier, and connect the LP Xover-Out to the input on your powered subwoofer. If your subwoofer has an LFE input then use that; if not, then use a normal input, and set the crossover frequency on your sub to its highest setting to use the active bass management crossover in the PT1.

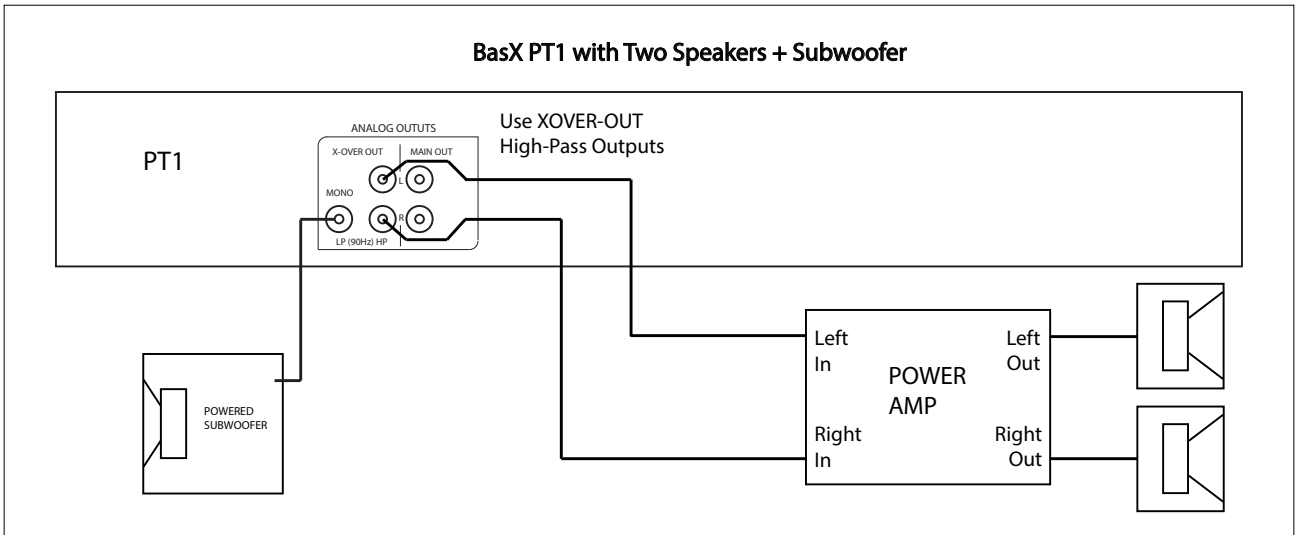

Connecting speakers to your BasX TA1

To connect your TA1 to a pair of speakers simply connect the speakers to the Left and Right Speaker Outputs on the TA1. ***Set the Crossover Switch on the TA1 to Full Range.***

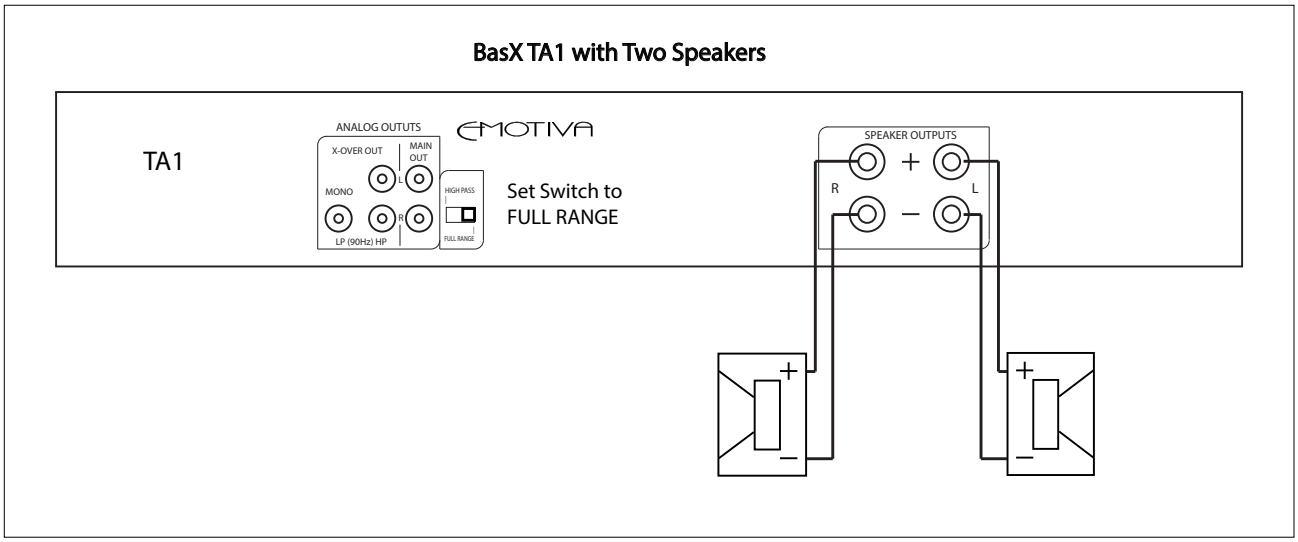

Connecting speakers and a subwoofer to your BasX TA1

To connect your TA1 to a pair of speakers and a subwoofer, connect the speakers to the Left and Right Speaker Outputs on the TA1, and connect the LP Xover-Out to the input on your powered subwoofer. ***Set the Crossover Switch on the TA1 to High Pass.*** If your subwoofer has an LFE input then use that; if not, then use a normal input, and set the crossover frequency on your subwoofer to its highest setting to use the active bass management crossover in the TA1.

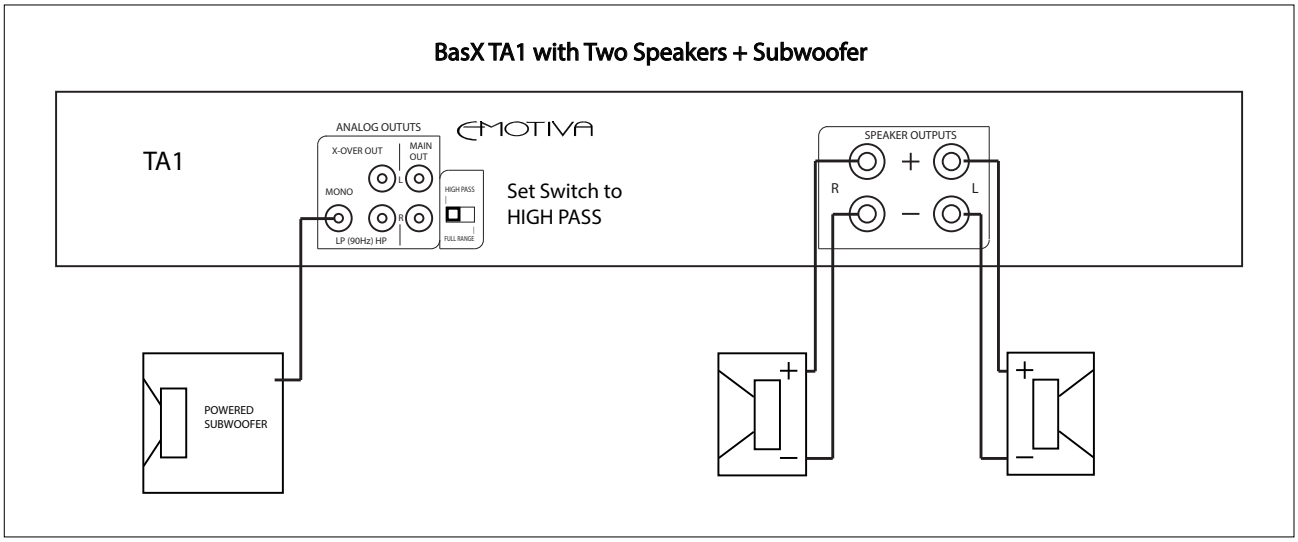

Note: The active bass management high-pass filter is always applied to the HP Xover-Out outputs on the TA1. The setting of the Crossover Switch controls whether the active high-pass filter is applied to BOTH THE MAIN OUTPUTS AND THE SPEAKER OUTPUTS.

Connecting digital audio sources to your BasX PT1 or TA1

Connect your digital audio sources to the appropriate inputs.

Note: The digital inputs are designed to accept STEREO digital audio signals, and will not work with encoded digital surround sound audio signals. Some of your source devices may require you to configure them to deliver a stereo signal.

Note: If you plan to use Bluetooth sources then be sure to connect the included Bluetooth antenna to the Bluetooth Antenna connector on the rear of the unit.

Connecting analog line level audio sources to your PT1 or TA1

Connect your stereo analog line level sources to the CD or Aux Inputs on the PT1 or TA1.

Connecting a turntable to your BasX PT1 or TA1

If you have a turntable with a direct output, then it should be connected to the Phono Input on the PT1 or TA1, and the Phono Input Gain Switch should be set for the type of cartridge you have. If your turntable has a separate ground wire, connect it to the Phono Input Ground Lug.

Note: The manufacturers of some cartridges may specifically instruct you to use unusual settings; for example, some moving coil cartridges may specify that you use the "moving magnet" setting for proper output level. Always follow the manufacturer's recommendations.

Note: Some turntables have a built-in phono preamp and a line-level output. If so, then their line level output should be connected to a line level input on the BasX PT1 or TA1.

Connecting a trigger-enabled device to your BasX PT1 and TA1

If your amplifier has a trigger input, you can configure your amplifier to automatically turn on when you turn on your PT1 or TA1 by connecting a trigger cable between the Trigger Output of the PT1 or TA1 and the Trigger Input on your amplifier. (You may need to configure your amplifier to work with an external trigger.)

Line Voltage

Both the BasX PT1 and BasX TA1 have circuitry that enables them to automatically detect the proper line voltage and configure themselves automatically when you plug them in. Both will operate on either 115 VAC or 230 VAC at 50 Hz or 60 Hz.

Care and Maintenance

Periodic Maintenance

Your BasX PT1 or BasX TA1 requires no periodic maintenance or calibration.

Cleaning your PT1 or TA1

- If necessary, the PT1 or TA1 should be cleaned gently with a soft rag.
- If something sticky gets on the front panel or case of the PT1 or TA1, it should be cleaned with a mild cleaning solution applied to a soft rag, followed by wiping with a clean rag dampened with plain water and drying with a soft dry rag or cloth.

Note: DO NOT spray water or cleaning solution directly onto the PT1 or TA1 or into the vents.

Specifications For Both PT1 and TA1

Analog Inputs (both)

2 pairs – stereo analog line level inputs (CD, Aux).
1 pair – stereo phono inputs (switchable; moving magnet or moving coil).
1 tuner – FM (with external antenna input; 15 station presets).

Digital Inputs (both)

1 – digital coax (S/PDIF); stereo; 24/192k.
1 – digital optical (Toslink); stereo; 24/192k.
1 – digital USB (DAC input); stereo; 24/192k.
1 – Bluetooth receiver; Bluetooth 5, AptX and AAC (antenna included).

Outputs (PT1)

1 – subwoofer output; summed monaural with fixed 90 Hz Linkwitz-Riley low-pass filter.
1 pair – stereo high pass outputs; with fixed 90 Hz Linkwitz-Riley high-pass filter.
1 pair – stereo full range main outputs.
1 – stereo headphone output (front panel).

Outputs (TA1)

1 – subwoofer output; summed monaural with fixed 90 Hz Linkwitz-Riley low-pass filter.
1 pair – stereo high pass outputs; with fixed 90 Hz Linkwitz-Riley high-pass filter.
1 pair – stereo main outputs; either full range or 90 Hz high-pass (set by Crossover Switch).
1 pair - speaker outputs; either full range or 90 Hz high-pass (set by Crossover Switch).
1 – stereo headphone output (front panel).

Controls and Indicators

Power – rocker switch; rear panel.
Standby – one front panel push button.
Two front panel push-buttons – Input Select; menu operation.
Front panel digital encoder knob – Volume; Tuning; menu operation.
VFD Display – high visibility blue alphanumeric VFD display (dimmable).
LEDs – amber Standby LED; blue illuminated legends for Input buttons and Headphone output.

Remote Control

Compact full-function infrared remote control.

Trigger Output

12 VDC trigger output – delivers 12VDC trigger signal when unit is On.

Line Level Analog Performance (both)

Maximum output level: 4 VRMS.
Frequency response: 5 Hz to 50 kHz +/- 0.04 dB.
THD+noise: < 0.001% (A-weighted).
IMD: < 0.004% (SMPTE).
S/N ratio: > 120 dB.
Crosstalk: < 90 dB.

Phono Input Analog Performance (both)

Frequency response (moving magnet and moving coil): 20 Hz to 20 kHz; ref standard RIAA curve.
THD+noise: < 0.015% (moving magnet; A-weighted); < 0.06% (moving coil; A-weighted).
Gain (ref unity gain on main inputs; at 1 kHz): 44 dB (moving magnet); 55 dB (moving coil)
S/N ratio: > 78 dB (ref 5 mV; moving magnet); > 58 dB (ref 0.5 mV; moving coil).

Digital Performance (both)

Frequency response: 5 Hz to 20 kHz +/- 0.15 dB (44k sample rate).
Frequency response: 5 Hz to 80 kHz +/- 0.25 dB (192k sample rate).
THD+noise: < 0.003% (A-weighted; all sample rates).
IMD: < 0.007% (SMPTE).
S/N ratio: > 110 dB.

Amplifier Performance (TA1 only)

60 watts RMS / channel; into 8 Ohms, both channels driven, 20 Hz - 20 kHz, THD < 0.02%.
100 watts RMS / channel; into 4 Ohms, both channels driven, at 1 kHz, THD < 1%.
Minimum load impedance: 4 Ohms; Rated impedance: 8 Ohms.
Frequency response: 20 Hz to 20 kHz +/- 0.15 dB; 5 Hz to 80 kHz +0 / -1.8 dB.
S/N ratio: 116 dB.

Power Requirements

115 VAC or 230 VAC @ 50 / 60 Hz (automatically detected).
The BasX PT1 has a universal SMPS power supply which accepts from 100 VAC to 240 VAC.
The BasX TA1 has a linear main power supply that accepts either 115 VAC or 230 VAC.

Dimensions (both)

17" wide x 2 5/8" high x 12.5" deep (without connectors).
21" long x 7" high x 17-1/2" deep (boxed).

Weight

PT1: 9 lbs. (unit only); 14 lbs. (boxed).
TA1: 15 lbs. (unit only); 20 lbs. (boxed).

Emotiva Audio Corporation Three-Year Limited Warranty

What does this warranty cover?

Emotiva Audio Corporation (Emotiva) warrants its products against defects in materials and workmanship. This warranty, and all rights provided hereunder, is limited to the original owner. In the event the original owner transfers ownership of the Product prior to the expiration of the applicable term described below, this Warranty shall terminate immediately upon such transfer of ownership.

This Warranty only applies to Products purchased directly from Emotiva or any of its Authorized Dealers or International Distributors.

Emotiva warrants any replacement product or part furnished hereunder against defects in materials and workmanship for the longer of the following: (i) the amount of time remaining under the original warranty, or (ii) 120 days from your receipt of the repaired or replaced product. The duration described in this paragraph is hereinafter referred to as the "Term".

TO THE FULLEST EXTENT PERMITTED BY LAW, ALL IMPLIED WARRANTIES RELATED TO THE ORIGINAL PRODUCT AND ANY REPLACEMENT PRODUCT OR PARTS (INCLUDING IMPLIED WARRANTIES OF MERCHANTABILITY AND FITNESS FOR A PARTICULAR PURPOSE) ARE EXPRESSLY LIMITED TO THE TERM OF THIS LIMITED WARRANTY. SOME STATES DO NOT ALLOW LIMITATIONS ON HOW LONG AN IMPLIED WARRANTY LASTS, SO THE ABOVE LIMITATION MAY NOT APPLY TO YOU.

The original owner must make a claim within the Term of the Warranty. A claim shall not be valid (and Emotiva has no obligation related to the claim) if it is not made within the Term and if it is not made in strict compliance with the requirements of the "How do you get service?" section.

How long does this coverage last?

This warranty commences on the date of retail purchase by the original retail purchaser and runs for a period of three years thereafter, with the exception of accessories, cables, and remote controls*. This warranty is non-transferable to any person that owns the warranted product during the Term. Emotiva warrants any replacement product or part furnished hereunder against defects in materials and workmanship for the longer of the following: (i) the amount of time remaining under the original warranty, or (ii) 120 days from your receipt of the repaired or replaced product. The duration described in this paragraph is hereinafter referred to as the "Term".

*Accessories, cables, and remote controls have a one-year warranty to the original owner.

What will Emotiva do?

Emotiva will, at its option, either: (i) repair the product, or (ii) replace the product with a new consumer product which is identical or reasonably equivalent (in Warrantor's sole discretion) to the product. In the event Warrantor, in its sole discretion, is unable to replace or repair the Product or it is not commercially practicable to do so, then: (i) if the claim was submitted during the first 365 days of the Term, Warrantor shall refund to you the purchase price that you paid for the Product; and (ii) if the claim was submitted after the first 365 days of the Term, Emotiva shall issue you a credit equal to the purchase price that you paid for the product. The credit may only be used for the purchase of merchandise from Emotiva, and cannot be used for freight charges.

When a Product or part is repaired or replaced, any replacement item becomes your property and the replaced item becomes Emotiva's property. When a refund or credit is given, the Product for which the refund or credit is provided must be returned to Emotiva and becomes Emotiva's property.

What is not covered by this warranty?

This warranty does not apply: (i) to damage caused by use with products not manufactured by Emotiva, where the non-Emotiva product is the cause of the damage; (ii) to damage caused by service or maintenance performed by anyone who is not a representative of Emotiva; (iii) to damage caused by accident, abuse, misuse, flood, fire, earthquake or other external causes; (iv) to a product or part that has been modified after its retail purchase, where the modification caused or contributed to the damage; (v) to consumable parts, such as batteries or failure of or damage to the Product caused by batteries; (vi) if any Emotiva serial number has been removed or defaced on the product; (vii) glass or plastic panels, cabinetry, trim or other appearance items; (viii) cosmetic wear or damage to remote controls by user.

EMOTIVA SHALL NOT BE LIABLE FOR ANY INCIDENTAL OR CONSEQUENTIAL DAMAGES ARISING FROM OR RELATED TO ANY DEFECTS IN OR DAMAGES TO ITS PRODUCTS. SOME STATES DO NOT ALLOW THE EXCLUSION OR LIMITATION OF INCIDENTAL OR CONSEQUENTIAL DAMAGES, SO THE ABOVE LIMITATION OR EXCLUSION MAY NOT APPLY TO YOU.

How do you get service?

In order to make a claim under the Warranty, you must:

1. Call or e-mail a customer service representative at 1-877-EMO-TECH (1-877-366-8324) or support@emotiva.com. You must provide a description of your problem, the serial number of the Product for which the warranty claim is being made, and the original purchase date.

2. Then, you will be provided with a warranty service authorization number ("WS").

3. Next, you must ship the Product to the following address, with the WS written in large, bold numbers on the outside of the box, and with the letters "WS" written before the number, for example: WS1234. Parcels arriving without a WS number on the outside of the box will be refused. The customer pays for the shipping to Warrantor. Warrantor pays for the shipping back to the customer within the continental United States only. Customer is responsible for shipping charges on all other warranty claims.

Emotiva Audio Corporation
Attn: Repair Department
139 Southeast Parkway Court
Franklin, TN 37064

Units will be refused by Emotiva for the following:

Product was sent without the WS#
Product was sent with inadequate packaging.
Product was damaged in transit.
Product was shipped collect for shipping charges.

How does state law apply?

This warranty gives you specific legal rights, and you may also have other rights which vary from state to state.

What if my product is damaged on the way to you?

Emotiva is not liable for damages that may incur while an item is in transport to us. Please purchase insurance when you ship your item. If your Product was not adequately packaged, we will refuse receipt and the damaged package will be returned to you at your cost. If you do not have the original Emotiva Audio packaging, please check with our sales department to purchase replacement-shipping cartons.

How does the Warranty and service apply to international orders?

The Product Warranty is only valid in the country where the Emotiva product was originally shipped via an authorized dealer, distributor, or direct from the Emotiva factory. The Warranty is subject to change at any time depending on the laws and regulations within your specific country. Please check with your distributor for a complete understanding of the warranty in your county.

If you purchased your Emotiva Product outside of the USA and wish to have it serviced at the factory, all freight charges are <u>your responsibility</u>. If you do not have an authorized distributor or repair center in your country, your Product must come back to the Emotiva USA factory for warranty service.

Accessories

Speaker Cables and Interconnects

Using high quality audio interconnects with your BasX PT1 and TA1, and high-quality speaker speaker cables with your BasX TA1, will ensure that you get the best performance and and maximum reliability from your BasX unit and the equipment connected to it.

Emotiva Audio offers high-quality audio interconnects that feature solid engineering, premium build quality, excellent performance, and reasonable cost.

We recommend using any high quality speaker cable between 14 gauge and 16 gauge for short distances. For cable runs over ten feet we recommend using a slightly heavier gauge.

You will them on our website at www.emotiva.com.

Notes

All information contained in this manual is accurate to the best of our knowledge at the time of publication. In keeping with our policy of ongoing product improvement, we reserve the right to make changes to the design and features of our products without prior notice.

Emotiva Audio Corporation
135 Southeast Parkway Court
Franklin, TN 37064

www.emotiva.com