Instruction Manual

Solar-powered WiFi Wildlife Camera

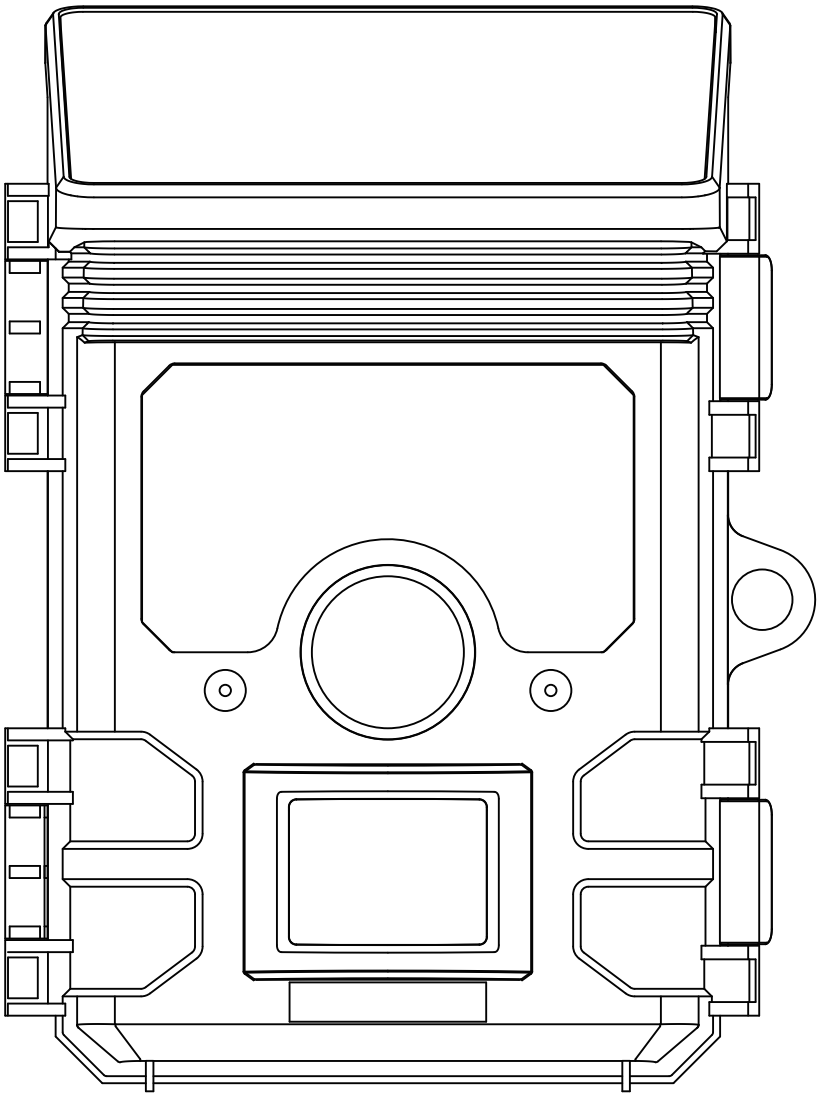

2K
VIDEO

CONNECTION

30.0
30 Megapixel

IP66
Waterproof

2.0”
IPS TFT-LCD

0.3S
Trigger time

60°
60° total
PIR angle

2K Full HD
Video function

Dear customer, congratulations on purchasing a high quality product.

You have purchased a Wildlife Camera with excellent technical features and respective accessory that is particularly easy to operate. Please study all notices carefully and diligently.Please study this information in detail observing, in particular, the safety instructions.

1. Contents of box

Carefully unpack camera and check that all of the following components are contained in the box:

1. Wildlife Camera
2. Mounting belt
3. USB cable
4. Instruction manual

Note:

- Remove the protective foil from the camera lens by pulling the protruding tab.
- Caution! Keep plastic foil and bags away from babies and small children, as otherwisedanger of suocation.

2. Contents

1. CONTENTS OF BOX 1
2. CONTENTS 3
3. HAZARD, SAFETY AND WARNING NOTICES 5
4. INTRODUCTION 7
5. YOUR CAMERA 8
5.1. Front view 8
5.2. Inside views 9
6. PREPARING THE CAMERA 10
6.1. Opening and closing the camera 10
6.2. Inserting the batteries 10
6.3. Inserting the memory card 11
6.4. External power supply 12
6.5. Assembly with strap 12
6.6. Operation graphi expression Operation (see figures below) 13
7. USING THE CAMERA 14
7.1. Mode switch 14
7.2. Operating buttons 14
7.3. Settings 16
7.4. WIFI APP connection 22
7.4.1. Connect the Bluetooth 22
7.4.2. WiFi connection 25
7.4.3. Exit WiFi 31
7.5. Aligning the camera 32
7.6. Setting up the Live mode 33
7.7. Night recording 33
7.8. File format 33
8. CONNECTING TO COMPUTER 34
9. TECHNICAL SPECIFICATION 35
10. SIMPLE TROUBLE SHOOTING 37
11. SYSTEM INFORMATION, MAINTENANCE AND DISPOSAL 38

11.1. Care 39
11.2. Storage 39
11.3. Disposal 39

3. Hazard, safety and warning notices

Incorrect use of the camera and accessories can be dangerous for you and others and can damage or destroy the camera. We therefore ask you to read and strictly observe the following Hazard, safety and warning notices.

Intended use

- This camera is intended for taking digital photos and video clips. It has been designed for private use and is not suitable for commercial purposes.

Hazards for children and persons with limited ability to operate electronic equipment

- The camera, accessory and packaging are not toys for children. These should therefore always be kept away from children. Danger of electrocution, poisoning and suffocation.
- The camera and accessory may not be used by children and persons with limited abilities. The camera may only be operated by persons physically and mentally able to operate it safely.

Electrical hazard

- Switch off the camera and remove the batteries if a foreign body or liquid has entered the camera. Let all parts dry thoroughly. Otherwise danger of fire or electrocution
- Switch off the camera and remove the batteries if the camera has been dropped or the housing is damaged. Otherwise danger of fire and electrocution.
- The camera may not be dismantled, modified or repaired. Danger of fire and electrocution.
- Only use a power adaptor (not supplied) with the mains voltage specified on the rating plate (6V). Otherwise danger of fire or electrocution. Disconnect the power by pulling the power adaptor out of the socket.
- A plugged in power adaptor (not supplied) can continue to use power and the refore represents a hazard source.
- The power supply may not be used during thunderstorms. Otherwise danger of electrocution.

Damage from heat-fire hazard

- Do not leave the camera in places that are susceptible to considerable in creases in temperature (e.g. a vehicle). The housing and internal parts may be damaged, which in turn could cause a fire.
- Do not wrap up camera or place on textiles. This could produce a build up of heat in the camera that can cause deformation of the housing and may represent a fire hazard.

Injuries and material damage

- Only place the camera on sturdy surfaces. The camera could otherwise fall or topple over, causing damage or injury.
- Do not operate the camera whilst running or driving. You could fall or cause a traffic accident.
- Only use a mains adaptor (not supplied) for the camera, having the in put voltage specified on the rating plate (6V). We do not accept any liability for damage caused by the use of an incorrect mains adaptor.
- The 230V socket used for the mains adaptor (not supplied) must not be covered and accessible at all times so that the mains adaptor can be quickly disconnected from the mains, when required.
- Ensure adequate ventilation and do not cover the mains adaptor (not supplied) to avoid overheating.
- Do not place any open ignition sources, such as lit candles onto or close to the device.
- Do not subject the LCD monitor to impact or pressure. This could damage the glass of the monitor or the liquid could leak from the inside.
  In case of contact with eyes or skin, rinse immediately with clear water.
  In case of contact with eyes contact a doctor immediately.
- Damage to the electronics, the monitor or the lens caused by external influences such as impacts, falls or other are not covered by the warranty and must be paid for.
- Do not drop or bump the camera and always handle it carefully. Otherwise the camera can be damaged.

4. Introduction

The Wildlife Camera is a wildlife and surveillance camera with 1 zone infrared sensor. The sensor can detect sudden changes to the ambient temperature within an evaluation area. The signals of the highly sensitive infrared sensor switch on the camera, activating picture or video mode.

Features of Wildlife Camera:

- 30Megapixel photo and 2K Full HD video.
- 2.4-2.5GHz 802.11 b/g/n WiFi high-speed up to 150Mbps.
- 2.4GHz ISM frequency bluetooth.
- WiFi function, you can preview, download, delete the taken photos and videos directly, take photos and videos, change settings, check battery and memory capacity in APP.
- Low comsuption 5.0 Bluetooth to activate the WiFi hotspot.
- The unique sensor design offers a 60°wider angle of detection and improves the response time of the camera.
- During day, sharp and clear color images and during night time clear black and white images.
- Impressively quick trigger time 0.3 seconds.
- Spray water protected according to standard IP66.
- Lockable and password protection.
- Date, time, temperature, battery percentage and moon phase can be displayed on the images.
- Using the Camera Name function, locations can be encoded on photos. Where several cameras are used, this function allows easier identification of locations when viewing photos.
- Possible use under extreme temperatures of between -20°C to 60°C.
- Extremely low power consumption in standby operation providing extremely long operating times. (in standby mode up to 18months with 4400mAh Li-battery).

Areas of application

- Camera trap for hunting.
- Animal or incident observation.
- Motion triggered security camera for domestic, office or public use.
- Any internal and external surveillance, where evidence of an infringement has to be provided.

5. Your camera

5.1. Front view

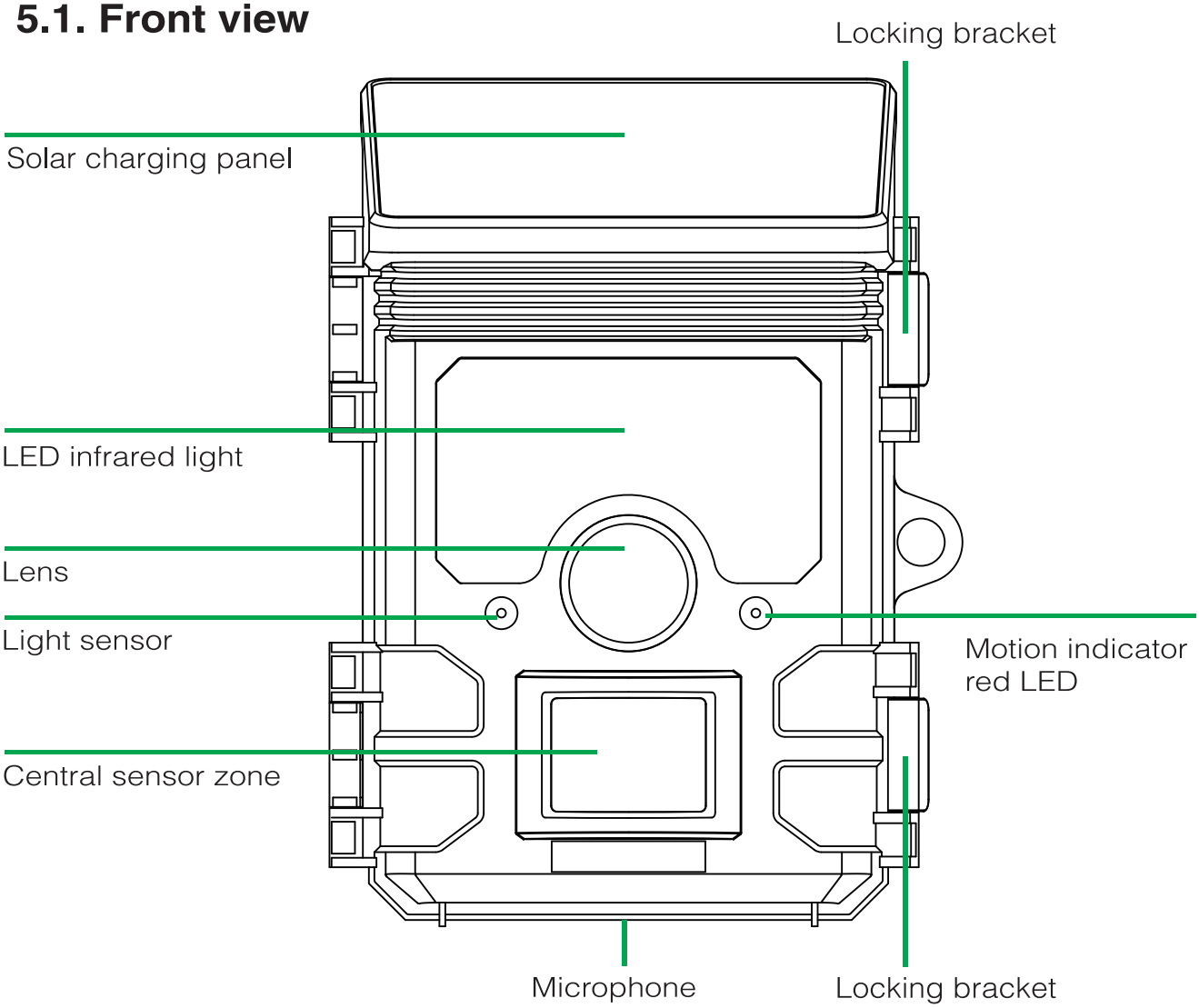

Note:

- Above graphics major introduce the operation functions of the product, the appearance of the 2K series produce would be some different, please refer to the actual products you have.

5.2. Inside views

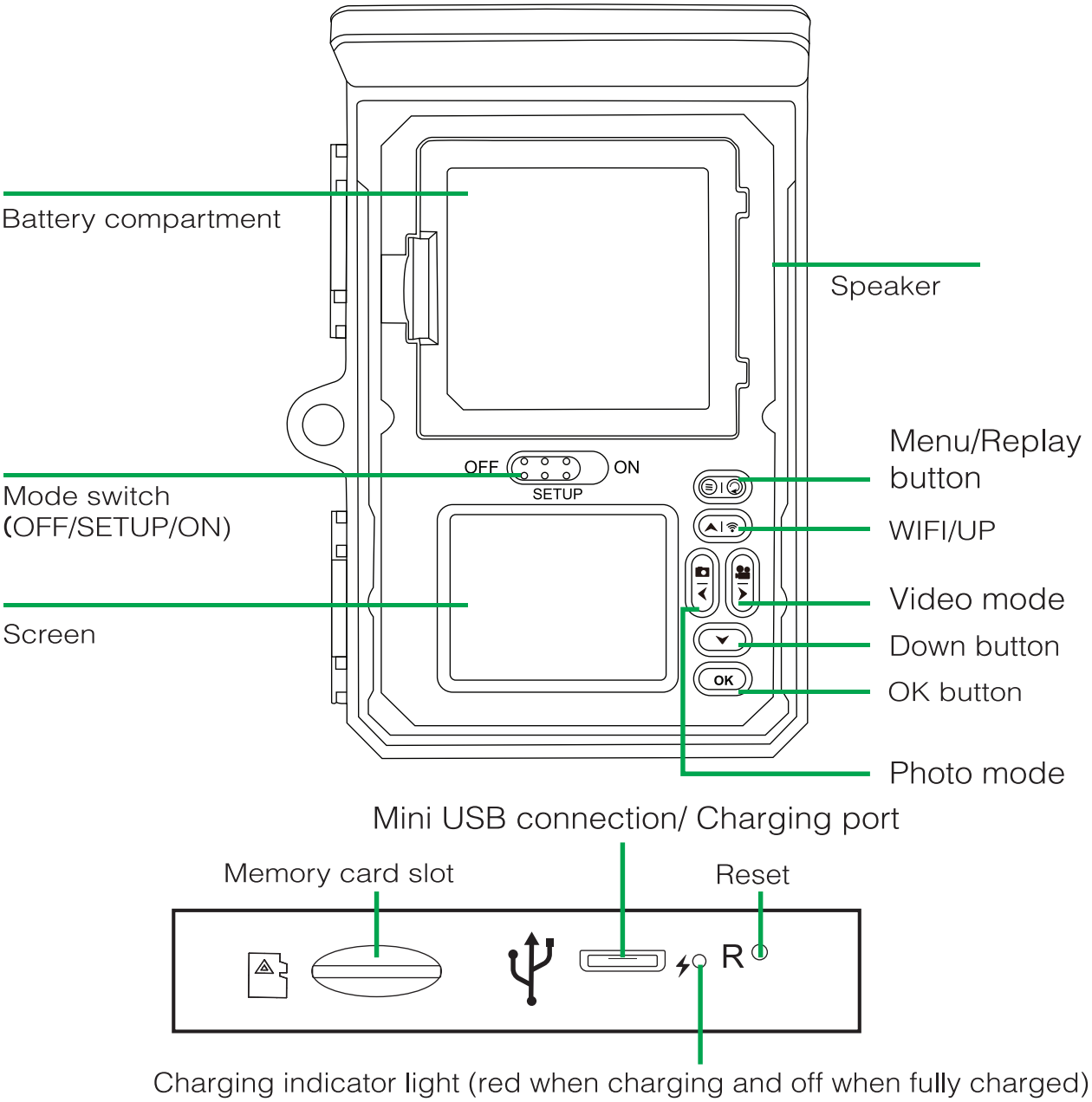

- The monitor is only switched on in the SETUP mode for changing menu settings or viewing existing photos.
- An TF memory card must have been inserted into the memory card slot in order to save photos.
- Using the mini USB connection (USB 2.0), the camera can be connected to a computer.
- Using the mode switch the three operating modes OFF, SETUP and ON can be selected.

6. Preparing the camera

6.1. Opening and closing the camera

Operating buttons, connections and batteries are located inside the Wildlife Camera.

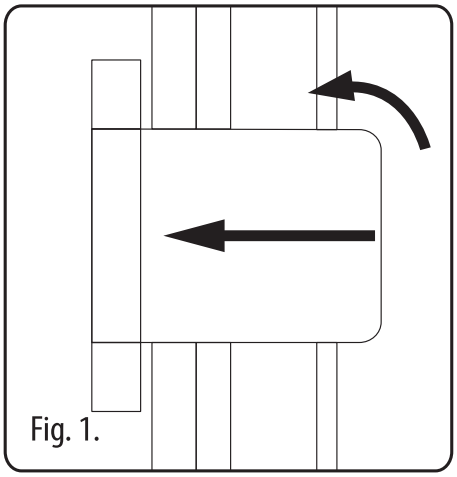

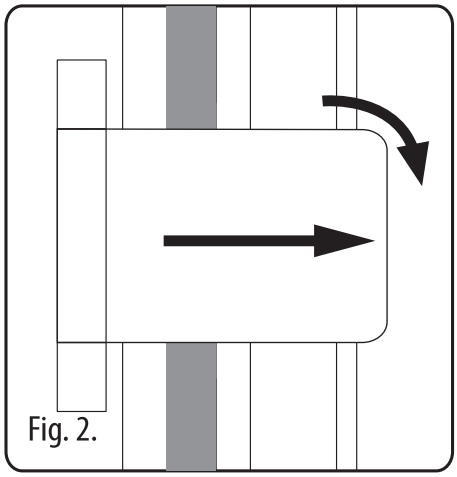

A fixing for a padlock is provided between the two locking brackets, allowing the camera to be securely locked.

6.2. Inserting the batteries

Open the camera as described in section 6.1 to insert the batteries. The battery compartment is housed in the upper of the screen. Now open the protective cover of the battery compartment by pulling the clamping closure at the top slightly inwards before lifting off the cover.

First remove any existing batteries from the battery compartment. Insert 4 fully charge batteries as shown in the below figure. When insertig batteries ensure correct position as m arked for each battery in the battery compartment.

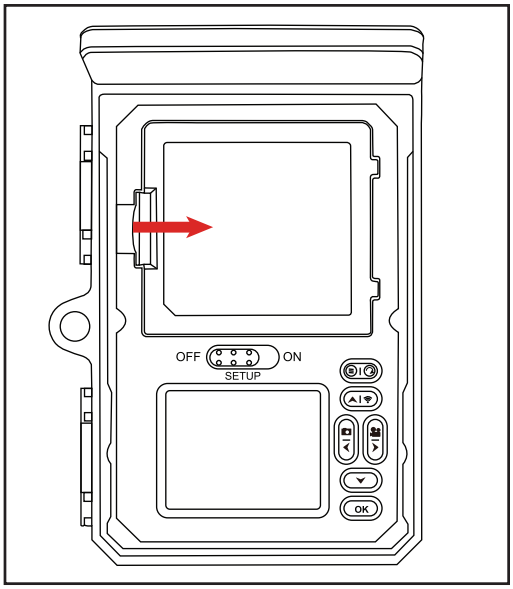

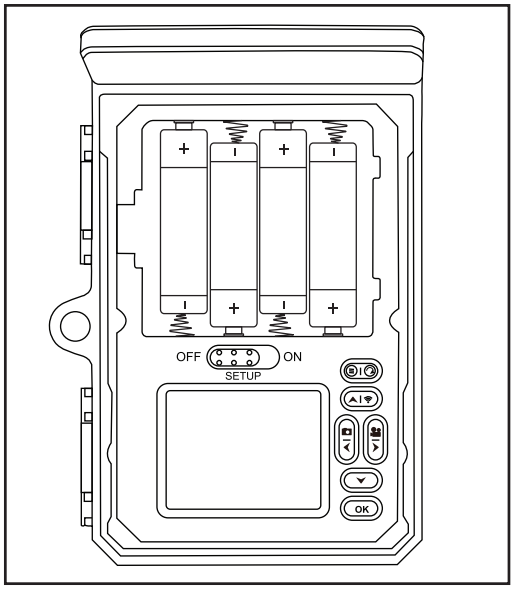

Note:

- We recommend using 4 x alkaline AA batteries to ensure the camera's normal function.
- If not inserting 4pcs batteries, the solar panel can also provide power supply for the camera.

6.3. Inserting the memory card

A memory card must have been inserted in order to save photos and videos. Insert a TF memory card in the memory card compartment before switching on the camera.
Switch off the camera and open as described in section 6.1.

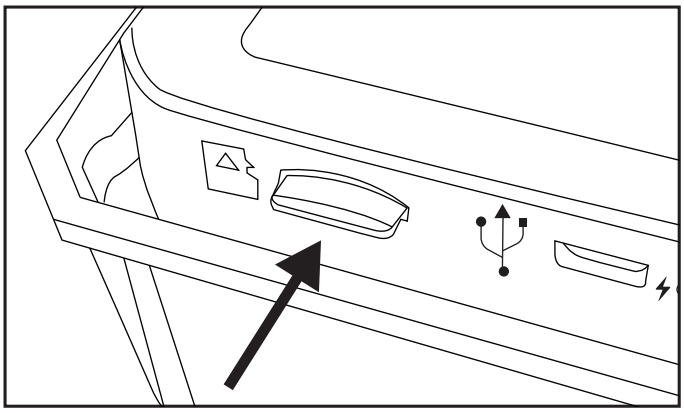

Insert the memory card as shown in the adjacent illustration. Push the memory card into compartment until it clicks into place.
To remove the memory card push card in again until it is partly ejected.

Note:

- TF memory cards up to a capacity of 256GB are supported.
- Please use the TF memory card for U1 CLASS 10 or above.

6.4. External power supply

The camera can be operated using power from an external power supply.
A 6 V power supply with at least 2.0 A is required.

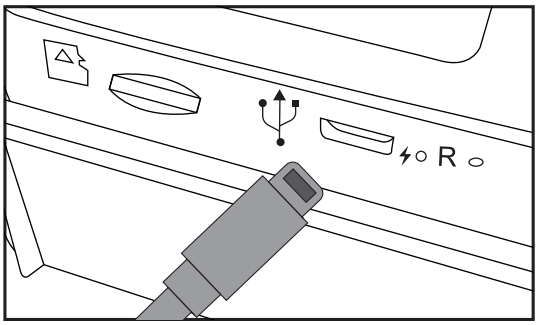

6.5. Assembly with strap

Use the securing strap supplied to attach the Wildlife Camera to a tree or another object. The illustrations below demonstrate how to fasten the securing strap.

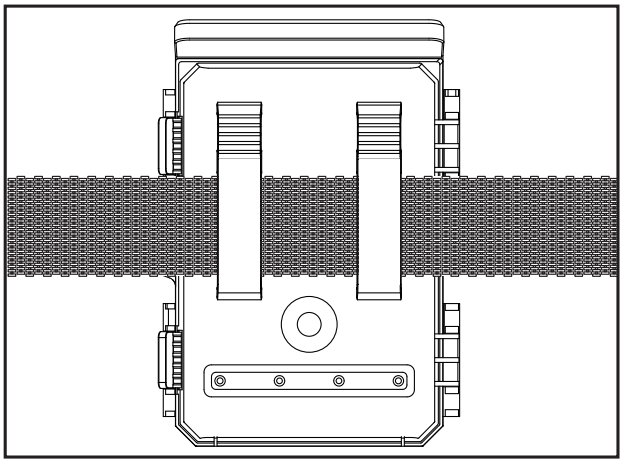

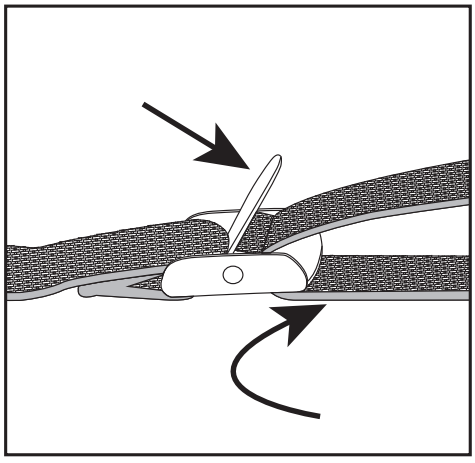

Position the Wildlife Camera as desired and pull the loose end of the securing strap tight until the camera is firmly secured.
To release the securing strap again, pull at the tab of the securing strap.

6.6. Operation graphi expression Operation(see figures below):

Open the locking brackets and the protective cover of the battery compartment- insert batteries -insert memory card- switch to SETUP- enter system menu by pressing MENU button- choose to reset to factory

The power supply may not be used during thunderstorms. Otherwise danger of electrocution.

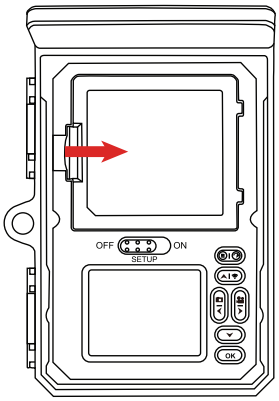

Open the Battery cover.

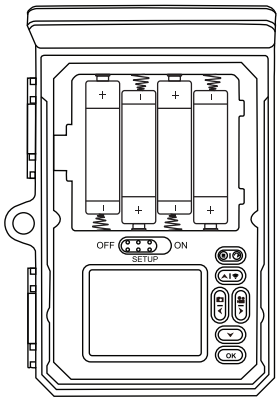

Pls insert 4pcs batteries. Battery model: AALR6

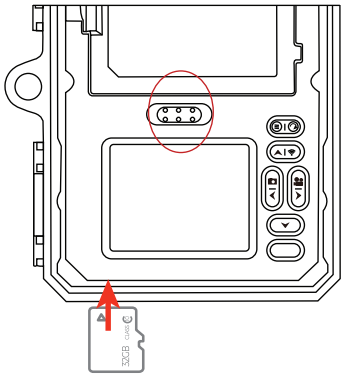

Insert U1 CLASS10 or above TF memory card in the memory card slot before switching on the camera and select, SETUP mode to adjust settings.

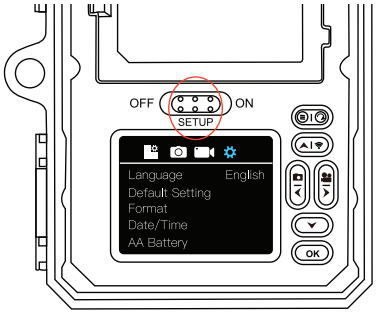

Press " " to enter the system setup menu.

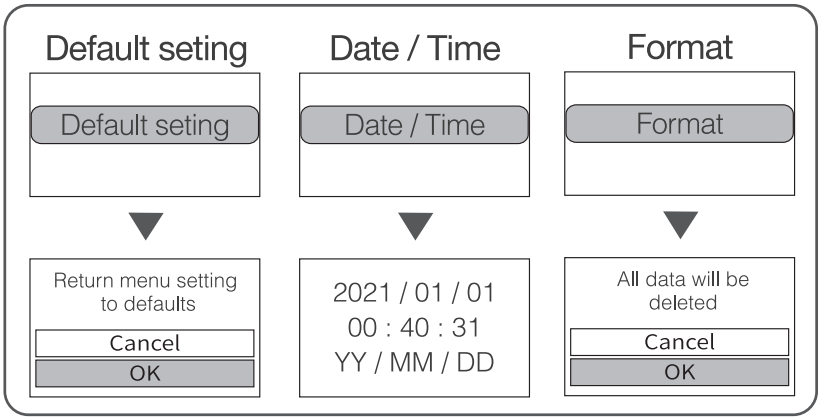

7. Using the camera

Prior to setting up the camera for surveillance, it must be set up for the respective purpose. For this purpose, there is a setup mode available. In addition to changing settings, photos and videos can be taken and existing photos can be viewed in this mode.

7.1. Mode switch

Open the camera as described in section 6.1. The Mode switch is located at the bottom edge on the left inside. 3 operating modes can be selected:

OFF : The camera is completely switched off in the OFF mode.
SETUP: Select SETUP mode to adjust settings and make or playback photos and videos.
ON: The camera is activated to take photos automatically (Live mode).

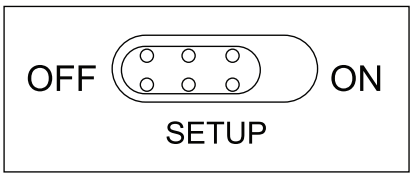

7.2. Operating buttons

Set the mode switch to SETUP and the camera and monitor are switched on. Using the operating buttons different functions can now be activated and settings can be changed. For this purpose, the following operating buttons are provided on the display panel:

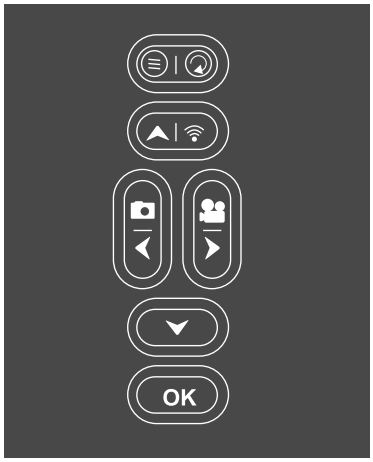

Functions of operating buttons in standby mode

Below, the operating buttons are described in the recording mode with non activated menu.

- : Press twice to open the Settings menu.
- : Press once to start the replay mode.
- OK : Take a photo or video, or stop recording.
- : Turn on /turn off WiFi hotspot.
- : Check AA batteries capacity.
- : Change to Photo mode.
- : Change to Video mode.

Functions of operating buttons in replay mode

Below, the operating buttons are described in the replay mode with non activated menu.

- : Long press to enter into deleting or protecting video or photo files.
- : Enter into or exit replay mode.
- : View existing pictures/videos backwards and drag up wards to view photo.
- : View existing pictures/videos forwards and drag down wards to view photo.
- : Skip ahead the video.

■ : Skip back the video.

■ OK : Start and pause replay of videos.

Functions of operating buttons in MENU setting

Below, the operating buttons are described in the replay mode with activated menu. (Recording and Replay mode).

■ : Close the Main menu or any sub menu by pressing the MENU button.

■ : Move up one menu point or increment value by 1.

■ : Move down one menu point or decrease value by 1.

■ : Move left to the data setting.

■ : Move right to the data setting.

■ OK : Open selected options or accept selected settings.

Confirm each change to a setting by pressing OK. If the change is not confirmed by pressing the OK button, the new setting are lost when leaving the menu.

7.3. Settings

Prior to using the Wildlife Camera, change the settings as required.Slide the mode switch of the Camera to the SETUP position to start the setup mode. In the Photo or Video mode press the MENU button to call up the menu. All menu options of the Camera and possible setting values for the recording mode are listed below. The standard setting is always highlighted in bold.

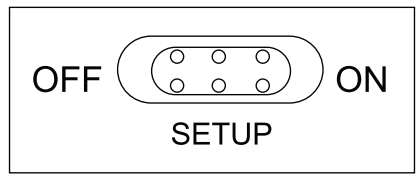

- **Mode : Photo**, Video, Photo + Video
  Select whether photos or videos should be taken when motion is detected. When in the"Photo + Video" mode, the camera first takes a set number of photos prior to recording a video.

- **PIR Interval:** Defaulted 30seconds, optional from 5seconds ~60minutes
  Select the shorsetup period for the camera to wait before it reacts to the successive triggering of the main sensor after an animal has first been detected. The camera does not record any images or videos during the selected interval. This prevents the memory card from being filled with unnecessary shots.

Note:

- The interval time is short, the camera shooting frequency would be high, and there would be high consumption of batteries. It would effect the usage days of the batteries. It is just on the opposite ,the interval time is long, would be a lower consumption of batteries to guarantee a long time usage.

- **PIR Sensitivity:** High/ **Medium**/ Low

- **Time lapse: Off**/On
  When “on” has been selected, the camera would automatically takes photos/ videos in the selected time interval, irrespective of whether or not the PIR sensor has detected a motion or not. This is useful for observing cold blooded animals e.g. snakes or plants opening up, etc.
  As soon as the "On" setting has been confirmed by pressing the OK button, you can enter the interval time after which photos/ videos are to be taken.

Note:

- In this mode, the PIR function would stop working, and the camera would take photos/ videos in the setting interval time.

- **Cirde shooting**: On/**Off**
  If choose On, the camera will delete the earliest pictures or videos after the TF card is full.

- **IR LED: Auto**/ Medium/ / Low/ Off
  Set the infrared LEDs brightness.

- **Low Bat Night Shot:** No IR Led/ **No Shutting**
  - No IR Led: The camera takes photos and videos without opening IR LEDs at night when battery is quite low.
  - No Shutting: The camera doesn't take photos and video at night when the battery is quite low.

- **Monitoring Period: Off**/On
  Set timer to "On" if camera should only be active within a certain time. Once "On" has been confirmed with the OK button, the start and end time can be set.

  If the start time is, for instance set to 18:35 hrs and the end time to 8:25 hrs, the camera will be operational from 6:35 pm of the current day until 8:25 am of the following day. The camera will not be triggered and will not take any photos or videos outside of this period.

- Image size : 30M: (7392x4160); 24M: (6544x3680); 20M: (5888x3312); 16M: (5376x3024); 12M: (4608x2592); 8M: (3840x2160); 4M: (2560x1440); 2M: (1920x1088)
  Select the desired resolution for photos. We recommend the resolution **8M**.

  A higher resolution produces a somewhat better photo quality but results in larger files requiring more space on the memory card. 30M, 24M, 20M, 16M, 12M resolutions are generated by interpolation which can also affect quality.

- **Picture NO**:**1P**, 2P, 3P, 4P, 5P, 6P, 7P, 8P, 9P, 10P.
  Select the number of photos to be taken in succession when the camera is triggered in the Photo mode. Please also observe the parameter Interval!

- **Shutter speed**: 1/15, 1/20, **1/30**

- **Resolution**: **2K(2560 x 1440 30fps)**; 1296P(2304 x 1296 30fps); 1080P(1920 x 1080 30fps); 720P(1280 x 720 30fps); 480P(848 x 480 30fps); 368P(640 x 368 30fps)
  Select the required video resolution.
  A higher resolution produces higher quality videos but results in larger files requiring more space on the memory card.

- **Video Length**: **Defaulted 10seconds**, optional 5seconds~180seconds
  Specify the duration of a video recording when the camera is triggered automatically. The recording period for videos is not limited in the SETUP mode.

- **Record Audio**: Off/**On**

- **Language**: Select the desired menu language
  The following languages are available: **English**, German, French, Spanish, Chinese, etc.

- **Default setting(Reset to factory): Cancel**/OK
  Press “OK” to reset the camera settings to the default values and confirm the selection by pressing the **OK** button.

- **Format: Cancel**/OK

  All files are deleted by formatting the memory card. Press **OK** button and confirm formatting by selecting "OK".

  We recommend formatting the memory card if it has already been used in other devices or if it is a new card.

  Caution: Ensure that files still required have been backed up prior to formatting!

- **Date / Time**: Set date and time

- **AA Battery:** Check AA batteries capacity.

- **Time Format:** 12hour/ **24hour**

- **Date Stamp: On**/Off

  Select "ON" to print the date, time, temperature, battery percentage and moon phase on each photo or video. Otherwise select "Off".

- **Beep Sound: On**/Off

- **Camera name:** 2K WIFI CAM

  You can use a combination of 10 digits and 26 letters to document the location on the photos and videos. When using several cameras this makes it easier to identify the location when viewing photos and videos.

- **Password Setting: Off**/On

  After selecting "On" enter a four digit password to protect your camera against unauthorised access.

  This password must be entered each time the camera is switched on in the SETUP mode before the camera can be used.

Note:

- If you forgot your password, please unlock the camera with password “OPEN”.

- **Bluetooth**: Off/ **On**

- **WiFi SSID**: 2K WIFI CAM-****

  You can use a combination of 10 digits and 26 letters to document the location on the photos and videos. When using several cameras this makes it easier to identify the location when viewing photos and videos.

- **WiFi Password**: Default 12345678

- **Auto WiFi Off: 1Minute**, 2Minutes, 3Minutes

  If the camera turns on the WiFi hotspot, but the phone doesn't connect to the WiFi hotspot successfully within selected time, then WiFi hotspot will disconnect automatically and the camera will return to SETUP mode or ON mode.

- **Auto Power Off: 3 min**/5 min/10 min/Off

  If there is no operation more than the selected time, then the camera will turn off automatically in SETUP mode.

- **Backlight: 1Minute**, 3Minutes, 5Minutes, Off

  The LCD monitor would automatically turn off after the setting time.

- **Version:** You can check the software version.

- **Mcu FW Update**

- In replay mode the option Delete and protect are is available in the menu.

– **Delete:** Select the "Delete" option to remove individual or all photos and videos from the memory card thus making storage room for new photos and videos.

– **Delete Current:** Using this option you can delete individual photos and videos. After selection the option by pressing the OK button, the photo and video to be deleted is shown. Confirm deletion by selecting "Yes" and confirming the selection by pressing the OK button. To end the deletion process, select "No" and confirm by pressing OK.

– **Delete All:** Select option "All" to delete all photos and videos on your memory card. To confirm deletion of all your photos and videos, select "Yes" and press the OK button. Select "No" to interrupt the deletion operation.

– **Protect:** Lock Current/ Unlock Current/ Lock All/ Unlock All.

7.4. WiFi APP connection

Before using the wifi function, pleae install the APP application on the smartphone device. Please download and install the app from Google Play by searching“ Hunting Camera 4K ” for Android system and iOS system.

iOS

Android

7.4.1 Connect the Bluetooth

Slide the mode switch of the camera to the TEST or ON position, and then turn on the moible phone, click the APP

and enter STEP1 as shown in the following figure.

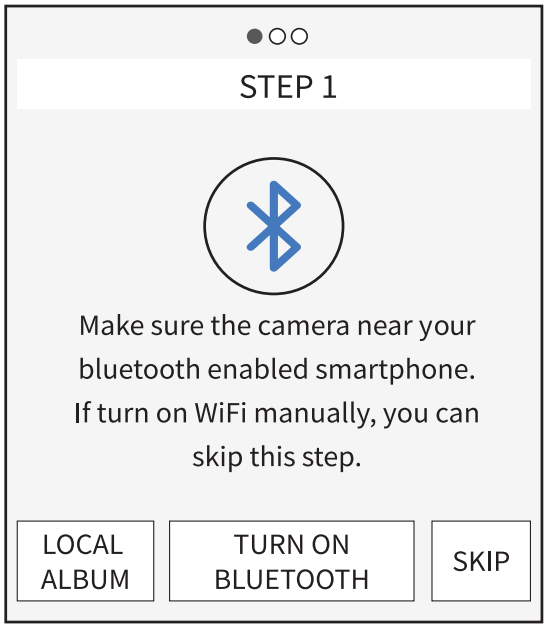

1. Click to enter “LOCAL ALBUM”, users can view, share, edit the pictures or videos which they download before.

2. Click “TURN ON BLUETOOTH”, and turn on the bluetooth accordingly to the prompt of the APP. The APP will enter “STEP2” and automatically search Bluetooth device by itself, as shown the figure below:

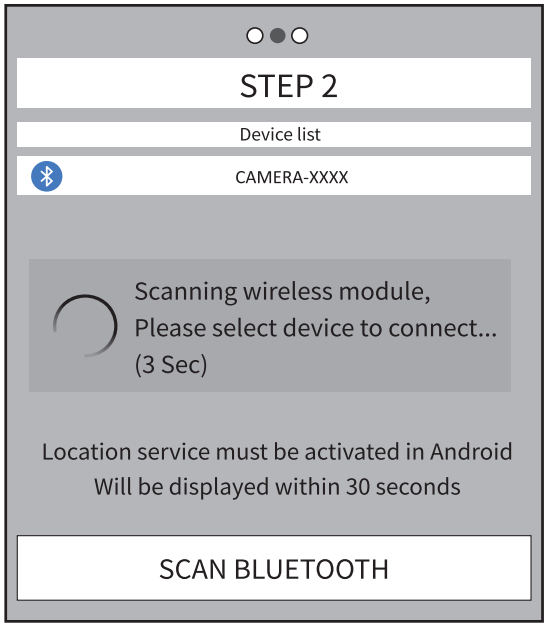

3. The searched Bluetooth devices will permutation displayed under the “device list”, as show below:

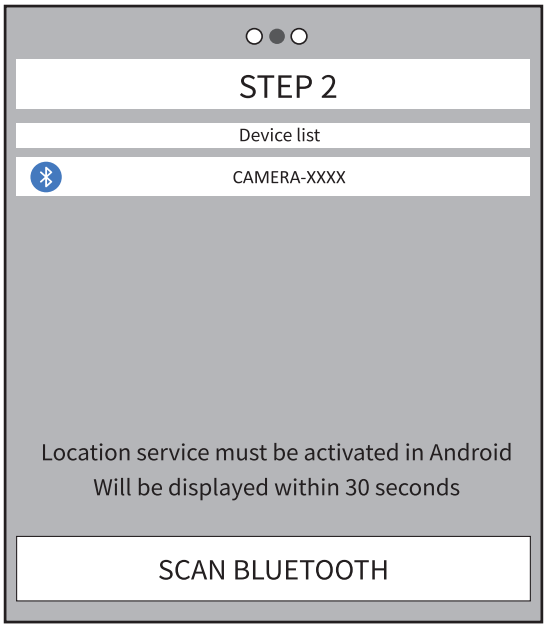

4. Click the appropriate Bluetooth device, APP would connect with camera Bluetooth. The mobile phone will pop up the window “Connecting...*** please wait...”. After successful connection, the APP would enter into the “STEP3”, and then the camera Bluetooth match successfully with the mobile phone Bluetooth.

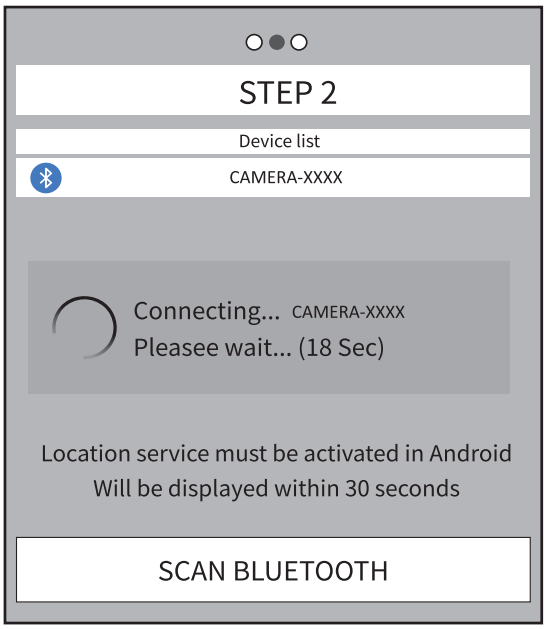

Note:

- In SETUP mode, the user can directly connect with APP when the user doesn’t want to use the Bluetooth function, just directly press the button on the camera to open the WiFi hotspot. And press “Skip” in the APP to enter WiFi interface.

7.4.2. WiFi connection

When the Bluetooth connection success, the APP would enter “STEP 3” as shown below diagram.

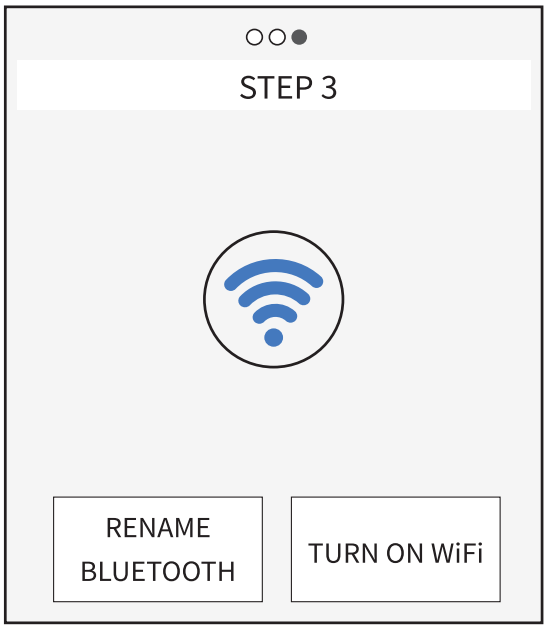

1. Click “RENAME BLUETOOTH”, user could modify the Bluetooth device name accordingly to their own needs, after the modification, click “OK” button and save it. Details as below shown diagram:

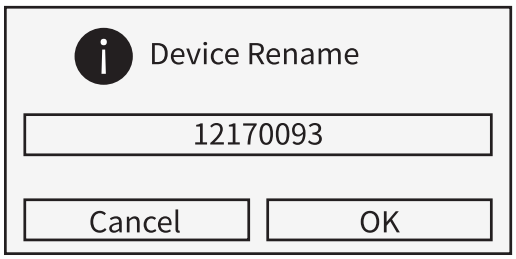

2. Click “TURN ON WiFi”, after 5s countdown, it would jump to the interface of “WiFi SETTING”, details as below shown diagram:

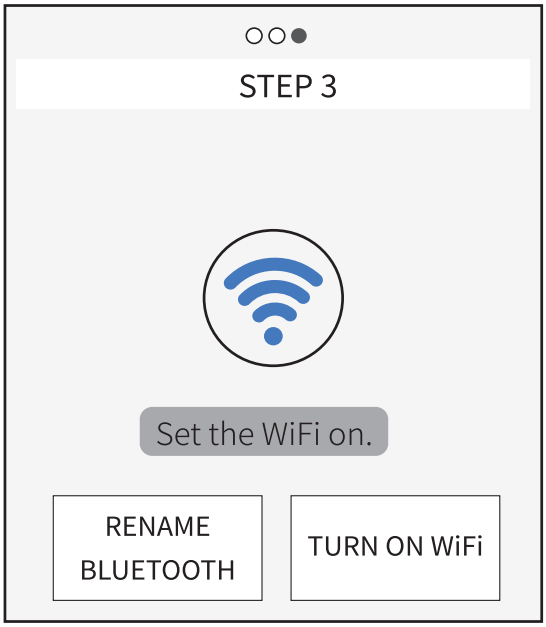

Android

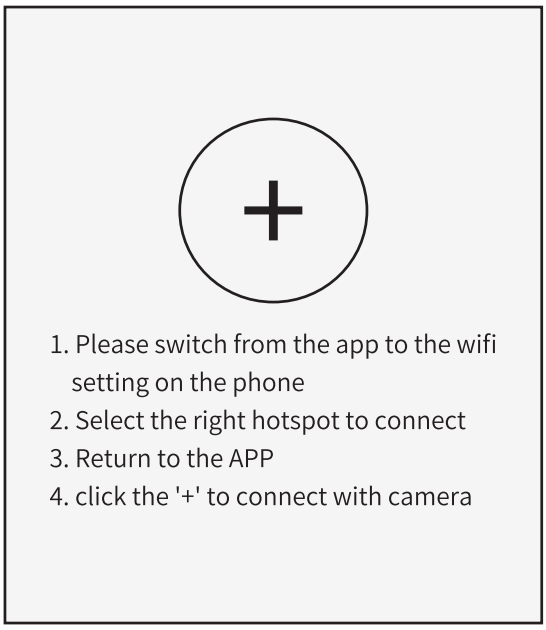

iOS

When the camera receives the command to turn on WiFi, the hotspot would be turn on as below shown.

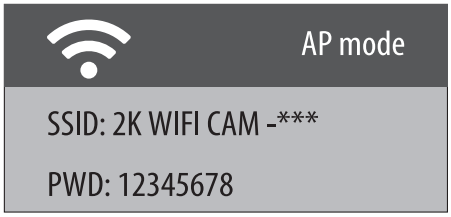

Operate the steps 1~4 following the interface.

a. Open the WLAN in the phone.

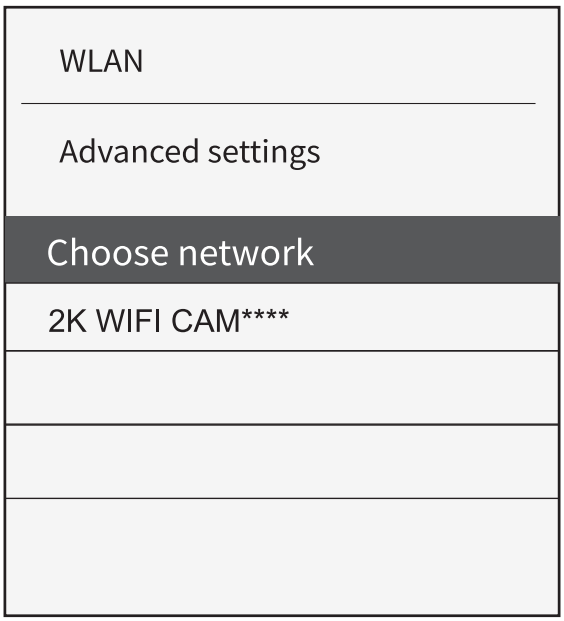

b. Connect with the correct WiFi hotspot, the initial password is 12345678.

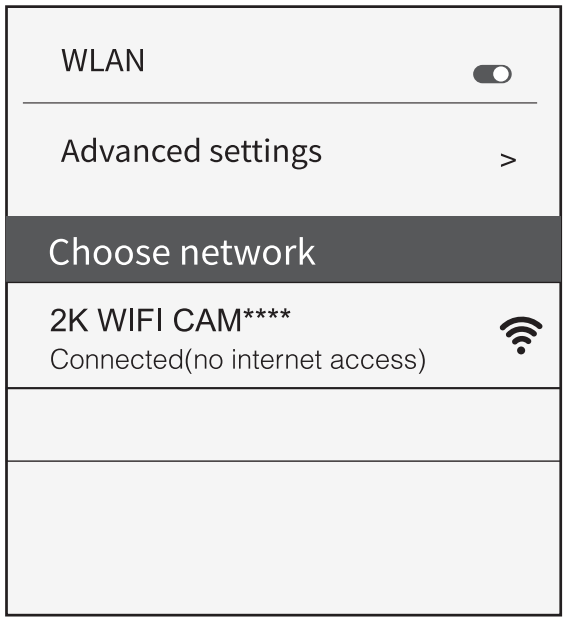

After successful connection, the interface display in the camera as below shown:

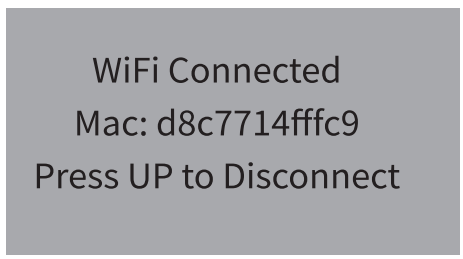

c. Return back to APP after the WiFi successful connection, And then APP would automatically connect with camera or click ”+” to manually connect.

When the APP and camera connect successfully, the interface as below shown:

1. In APP interface the icon funtions as below.

+	The connection between camera and mobile phone.		
EXIT	Turn off the APP, the mobile phone will disconnect with the camera and the camera enters into SETUP mode or ON mode.		
	The display of signal strength indicator.		
	Camera battery level display.		
	Switch to Video mode.		Solar charging icon.
	Switch to Taking photo mode.	2K P30	Photo&Video resolution.
4K	Review pictures or videos in the camera.		
	Take video and photos by APP and saved in the camera.		
	Camera System setting function. **Notice:** This setting function is synchronized with the camera system setting function. It realizes through the way of wireless.		

2. Click the icon

to enter the pictures review as shown below diagram.

	Select the picture or video to download, and press the button to save files to mobile phone.
	Press this icon to delete the selected the pictures or videos. After the pictures or videos are deleted, the files could not be recovered, please use caution.
all	Select all the files.
	Toggle Switch, the switch between picture and video.

3. Click the icon to enter the menu setting, as shown below diagram.

<	Settting
Mode	Photo>
Image Size	8M>
Sampling(valid in ‘ON’ mode)	1 Photo>
Resolution	2K P30>
Record Time(valid in ‘ON’ mde)	00:10>
Record Audio	On>
PIR Interval	00:30>
IR LED	Auto>
PIR Sensitivity	Med>
Cyclic Save	Off>
IR LED	Auto>

7.4.3. Exit WiFi

1. Press WiFi button in the camera to exit WiFi, then the camera will automatically return to SETUP mode or ON mode.
2. Click the “EXIT” in APP to disconnect WiFi , then the camera will also automatically return to SETUP mode or ON mode.
3. When the phone is far from the camera more than 15m, then the WiFi hotspot in the phone will disconnect automatically, after “Auto WiFi Off” time, the camera will automatically exit WiFi function, and return to SETUP mode or ON mode.

7.5. Aligning the camera

The Test mode is advantageous for determining the best possible detection angle and range of the movement sensor. For this purpose attach the camera at approx. 1-2 m height to a tree and align the camera with a desired direction. Move slowly from one side of the observed area to the other. Move parallel to the camera. Try out different angles and distances.

- The red LED on the front of the camera indicates that you were detected by a central sensor zone.

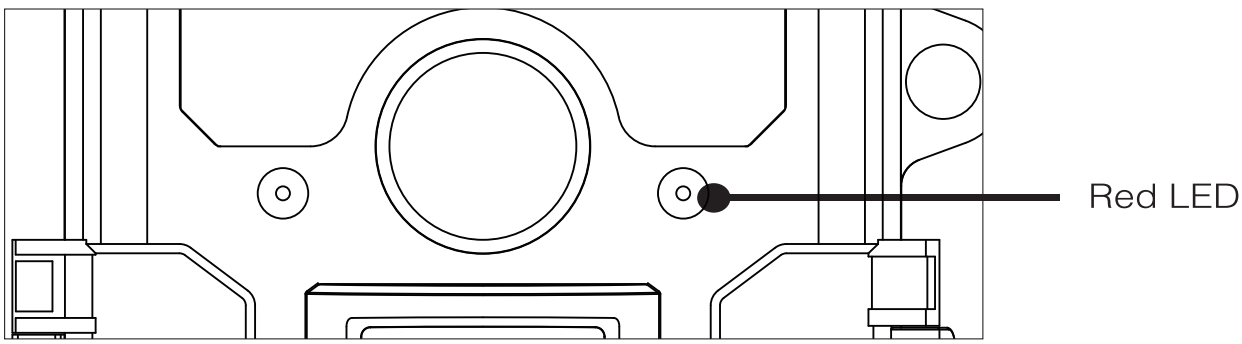

In this way you can determine the best position for aligning the camera.
The LED only lights up in the SETUP mode as soon as one of the sensors has detected movement. The LEDs do not light up when in Live mode.
In order to prevent incorrect signals and unnecessary photos, we recommend not using the camera at sunny points and check that no branches are in the active area of the sensor. Optimum alignment is in North or South direction. The detection range of the sensors is approx 60°.
Also check that the camera is set to the correct height in line with the point to be observed. Where necessary, point the camera down for optimum alignment.

Note:

- Wildlife Camera corresponds to protection class IP 66. The camera is protected against dust and spray water and can thus be used in any weather condition.

7.6. Setting up the Live mode

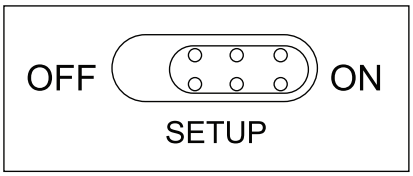

The standard application of the Wildlife Camera is the Live mode. When in this mode, photos are either triggered by movement sensors or at intervals according to the respective setting.
To set up the Live mode, switch mode switch to ON position.
The red status LED flashes for approx. 5 seconds after which the camera operates automatically and enters the Standby mode.

As soon as wild animals or other objects directly enter the detection area of the central sensor zone, the camera starts to record photos and videos.

7.7. Night recording

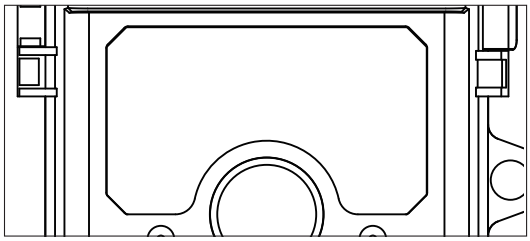

During night recording the infrared LEDs (IR LEDs) at the front of the Wildlife Camera provide the light required for taking photos. Wildlife Camera uses IR LEDs with a long wavelength, to keep red light to a minimum. The provided number of IR LEDs generates a high deflection anglethus allowing night recording at a distance of 3 m to 20 m, without overexposing the object. Reflecting objects can, however, also cause overexposure within this range (e.g. road signs).
Please note that night recording using IR LEDs produces black and white images.

7.8. File format

The Wildlife Camera stores photos and videos on the memory card in the folder "\DCIM\ MOVIE&PHOTO.
Photos are given a file name with extension ”JPG”(Example: “IM_00001.JPG”), videos, are given the extension ".MP4" (Example: "VD_00002.MP4").

When in SETUP and OFF mode use the enclosed USB cable to transfer files onto the computer. Alternatively you can insert the memory card in a card reader on the computer.

The video file can be played with most standard programs, such as Windows Media Player, QuickTime etc.

8. Connecting to computer

The Wildlife Camera can be connected to a computer using the supplied USB cables to view existing photos/videos.

System requirements

Windows	Macintosh
Pentium?III or higher	PowerPC G3/G4/G5
Windows?XP/Vista/7/8	OS 10.3.9 or newer system
512 MB RAM	512 MB RAM
1GB available hard disk space	1GB available hard disk space
Screen resolution 1.024 x 768 or higher	Screen resolution 1.024 x 768 or higher
Available USB connection	Available USB connection

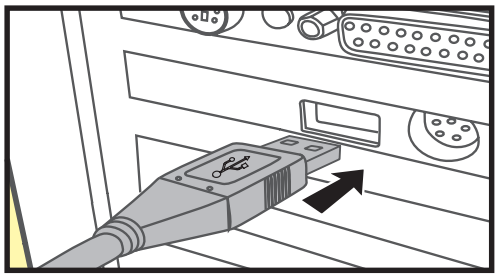

1. Connect the camera to your computer using the USB cable.
2. The camera switches on automatically in the USB mode, irrespective of the selection on the mode switch.
3. The camera installs itself on the computer as an additional drive under the name "Removable storage device".
4. Double click on the device to detect the folder "DCIM".
5. The photos and videos are located in the sub folders of the "DCIM" folder.
6. You can copy or move photo and video files on the computer. Alternatively you can insert the memory card in a card reader on the computer.

Note:

- Mac computers show an "Unknown" drive on the desktop. When clicking on this drive, the program "iPhoto" is automatically started.

9. Technical specification

Image and Video	
Photo resolution	30M:7392x4160; 24M:6544x3680; 20M:5888x3312; 16M:5376x3024; 12M:4608x2592; 8M: 3840x2160; 4M:2560x1440; 2M:1920x1088
Screen	2.0" IPS 320×240(RGB) DOT TFT-LCD Display
Lens	F=4.3; F/NO=2.0; FOV=80°; Auto IR filter
Triggering time	approx. 0.3 second
Video resolutions	2K(2560 x 1440 30fps); 1296P(2304 x 1296 30fps); 1080P(1920 x 1080 30fps); 720P(1280 x 720 30fps); 480P(848 x 480 30fps); 368P(640 x 368 30fps)
Effectiveness	Daytime: 1 m-infinitive; Night time: 3 m-20 m
Storage formats	Photo: JPEG; Video: MPEG - 4 (H.264)

Audio	
Microphone	48dB high sensitivity sound collection
Speaker	1W, 85dB

WiFi and Bluetooth	
WiFi	2.4~2.5GHz 802.11 b/g/n (High-speed up to 150 Mbps)
Bluetooth 5.0 frequency	2.4GHz ISM frequency

Trigger Alarm	
Detection angle of sensors	Central sensor zone: 60°
Triggering distance	up to 20 metres
PIR Sensitivity	High / Medium / Low

Data Storage	
Recording medium	Supports TF memory cards up to 256GB(optional)

Night vision	
Day / Night Mode	Day/night, Auto Switcing
IR-CUT	Built-in

APP	
System Requirements	IOS 9.0 or Aadroid 5.1 above
Real-time Video Preview	Only supports AP mode, Direct Video Connection, easy to install and test
APP Function	Installation target, parameter setting, time synchronization, shooting test, power warning, TF card warning, PIR test, full screen preview
Quick Parameter Setting	Supported
Online Data Management	Video, Photos, Events: Support online Viewing, Deletion, Download

Power Supply and Power Consumpton	
Power supply	Solar panel (4400mAh Li-battery); 4x batteries type LR6 (AA);
Standby time	Uninterruptible power Supply outdoor approx. 18 months indoor

Others	
Spray water protected	Yes (IP protection class66)
Connections	Mini USB 2.0
Dimensions	approx. 143 (H) x 107 (B) x 95 (T) mm

Note:

- Design and technical specification are subject to change.

10. Simple Trouble Shooting

The camera will not turn on	• Please check the batteries if they are installed in proper way. • Check if the battery capacity is low or exhausted. If so, please replace them with new batteries.
The camera turns off automatically	• Please check whether the battery capacity is less than 1%. If so, try to change new batteries for outdoor using or connect AC adaptor for indoor using.
It shows “TF card Error”	• Please ensure that TF card is with class 10 standard or higher level. • Please use the camera to format TF card at the first time.
Videos are choppy or jumpy when played on a computer	• Ensure that the computer system requirements are met. • Ensure MP4 format Video clip can be played on your computer.
The image is not clear	• Please ensure that you removed the protective films on IR LEDs and lens before using. • Please ensure that the lens is not dirty.

The camera does not take images or record videos	• If the memory of TF card is full, transfer images or videos to your computer or delete some files in the Replay Mode. • The memory card is not formatted properly. Format the TF card again or use a new card.
Camera can not turn off	• Once such malfunction occurs, remove all the batteries to reset the camera.
Forget the password	• Please enter the words “OPEN”, in case that you forget the password to start the machine.
The phone couldn’t connect WiFi	• Check Wifi password is correct.
Forget the WiFi password	• Default setting the camera, then the password is “12345678”.
The Bluetooth Couldn’t open the WiFi hotspot	• Check the menu ”Bluetooth” is “ON”.

11. SYSTEM INFORMATION, MAINTENANCE AND DISPOSAL

- Microsoft® and Windows® are trademarks of Microsoft Corporation registered in the US.
- Pentium® is a registered trademark of Intel Corporation. Macintosh is a trademark of Apple Computer Inc.
- SD™ is a trademark.

11.1. Care

Do not use any corrosive cleaners, such as methylated spirits, thinners, etc. to clean the camera housing and supplied accessory. When required, the clean system components with a soft dry cloth.

11.2. Storage

Always remove the battery from the housing if the camera is not being used for some time and store the battery separately. On a day to day basis and over longer periods the batteries can be kept at a dry location out of the reach of children.

11.3. Disposal

For disposal, separate packaging into different types and dispose of in line with environmental regulations in supplied collection containers. Batteries and storage batteries may not be disposed of in domestic waste. Consumers are obliged by law to return used batteries to communal collection points or dealers selling batteries. Storage batteries and batteries do therefore contain the adjacent symbol.

Correct disposal of product:
The adjacent symbol indicates that electrical and electronic equipment may not be disposed of in domestic waste in the EU. Please use the returns and collection points of your local council or contact your dealer you purchased the product from. This prevents potentially harmful effects on the environment and health as a result of incorrect disposal. For further information contact the respective department of your local council.

FCC Warnning:
TThis equipment has been tested and found to comply with the limits for a Class B digital device, Pursuant to part 15 of the FCC Rules. These limits are designed to provide reasonable protection against harmful interference in a residential installation. This equipment generates, uses and can radiate radio frequency energy and, if not installed and used in accordance with the instructions, may cause harmful interference to radio communications. However, there is no guarantee that interference will not occur in a particular installation. If this equipment does cause harmful interference to radio or television reception, which can be determined by turning the equipment off and on, the user is encouraged to try to correct the interference by one or more of the following measures:

- Reorient or relocate the receiving antenna.
- Increase the separation between the equipment and receiver.
- Connect the equipment into an outlet on a circuit different from that to which the receiver is connected.
- Consult the dealer or an experienced radio/TV technician for help.

Caution: Any changes or modifications to this device not explicitly approved by manufacturer could void your authority to operate this equipment.

This device complies with part 15 of the FCC Rules. Operation is subject to the following two conditions:
(1)This device may not cause harmful interference, and (2) this device must accept any interference received, including interference that may cause undesired operation.

This equipment complies with FCC radiation exposure limits set forth for an uncontrolled environment. This equipment should be installed and operated with minimum distance 20cm between the radiator and your body.