TJ-550 Wi-Fi Thermostat

User Manual

vine
Smart, yet Simple.

User Manual

Download the App

Several ways to download the Vine App or other Apps which help to control remotely:

1. Search “Vine Thermostat” in the App Store or Google Play Store, then download;
2. Use your smart device to scan the QR code on the left for an automatic download;
3. Search “Smart Life” or “Tuya” in the App Store or Google play then download.

Download on the
APP Store

GET IT ON
Google Play

iOS/Android

App Download

Vine Thermostat - A smart Choice for Smart Life!

Items included in box:

Wi-Fi Thermostat

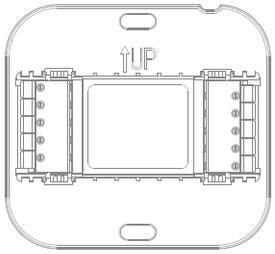

Wall Plate

Large Trim Plate

Screws Sets

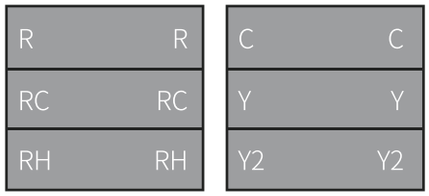

Wiring labels

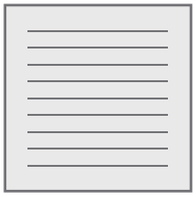

User Manual

You may also need these tools:

Phillips screwdriver

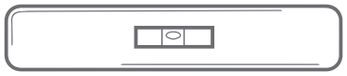

Level

Pencil

Home Wi-Fi Password

Compatibility

- ✔ Conventional (2H/2C)
- ✔ Heat Pump (4H/2C) include Auxiliary Heat or Emergency Heat
- ✔ Gas, Oil, Electric
- ✔ Dual Fuel Support

*** Require C-Wire to power the thermostat(24V-AC)**

Incompatible wiring and voltage

Please check your old thermostat for compatibility to see if it:

- **Does not work with electric baseboard heat (110VAC~240V AC)**
- **Does not work with millivolt systems**
- **Does not support S terminals for indoor and outdoor sensors.**

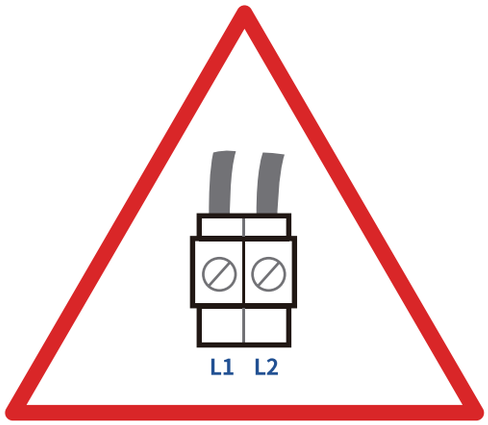

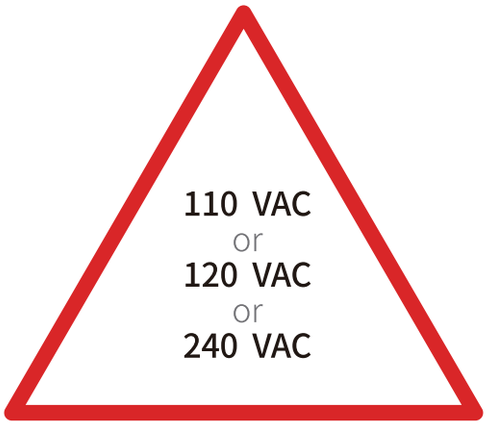

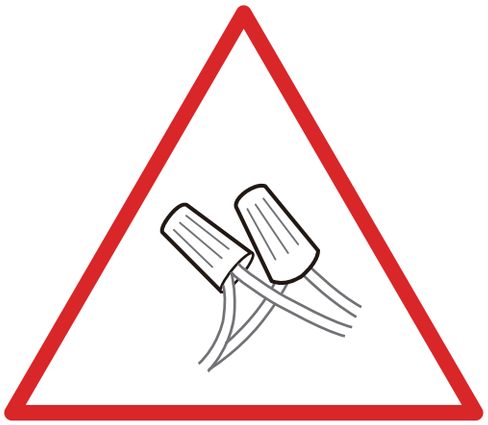

Note: If you are not sure, please contact a processional or call 1-800-264-3457

Installation

Step 1 Switch off the power

IMPORTANT as this protects you from blowing a fuse in your equipment. To make sure the power is off, change the temperature with your current thermostat and wait for at least 5 minutes to be sure that the system is OFF.

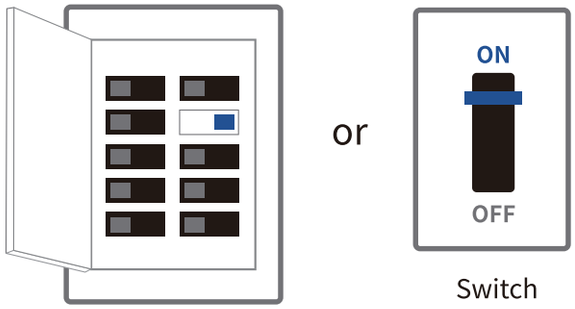

Step 2 Check that your system is off

Confirm your system is off by turning on your heat(during winter) or your AC(during summer). Wait a few minutes-you should not feel air coming from your vents.

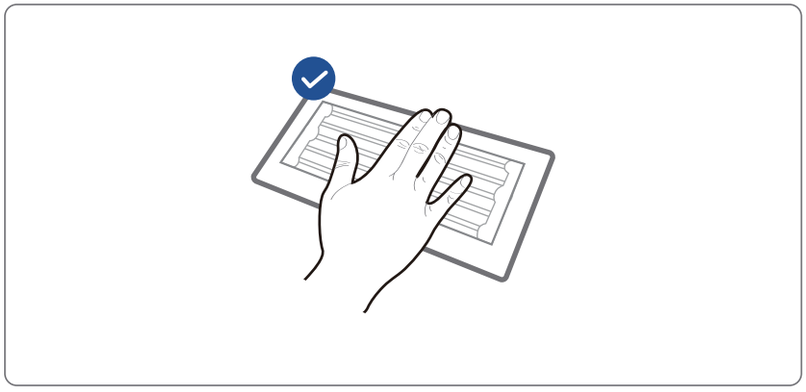

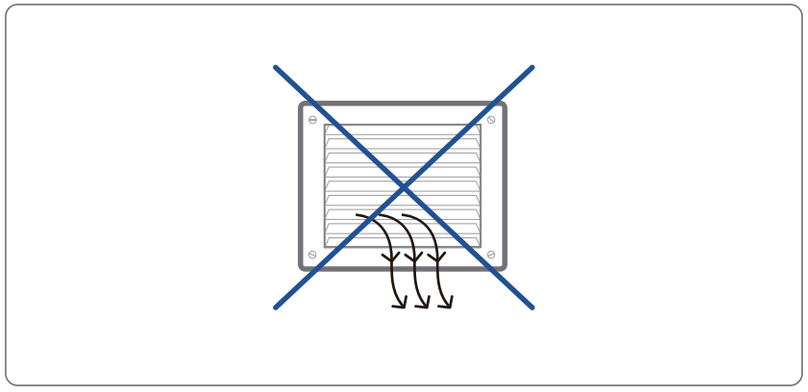

NOTE : If you have a digital thermostat that has a blank display, skip this step.

Step 3 Remove your old thermostat from the wall-plate

Most thermostats allow you to remove the main unit and provide access to a wall plate which holds the wiring terminals, you can take off the thermostat by grasping and gently pulling. Some thermostats may have screws, buttons, or clasps.

Note: Do not remove any wires from your thermostat at this time!

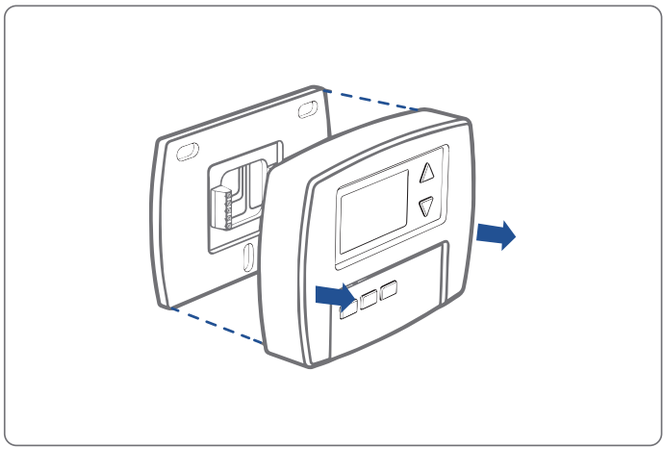

Step 4 Take a picture of the wiring

Take a picture of your existing wall plate' s wiring and save it for reference. Make sure you can read the wire terminal labels.

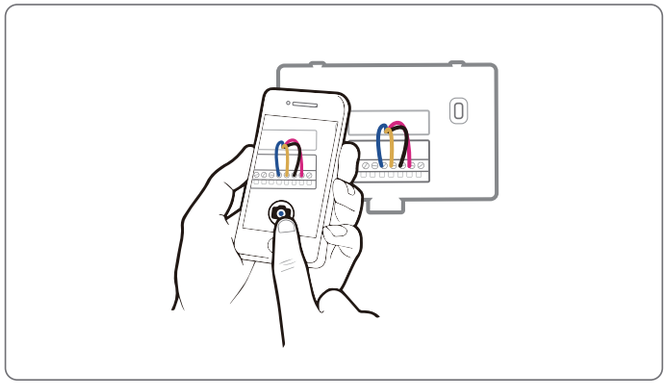

Step 5 Label the wires

Label the old wall plate with our new thermostat labels from packing box.

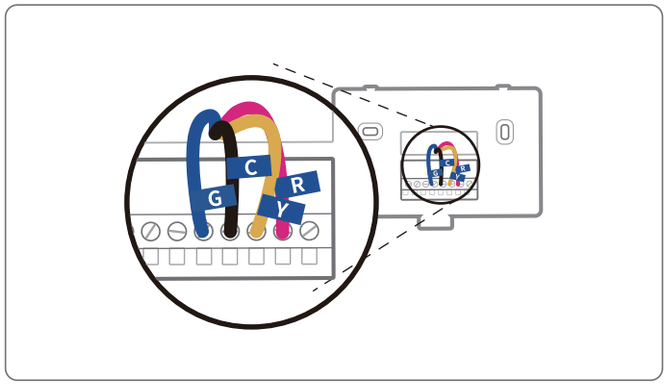

Step 6 Disconnect the wires and remove the old wall plate

Disconnect the wires from the old thermostat one by one, you may need a screwdriver to release wires from terminals. Unscrew and take off the mounting plate of your old thermostat from the wall.

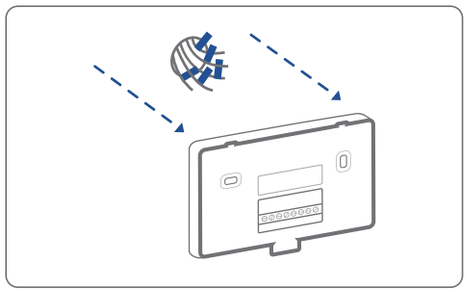

Note: Wrap the wires around a pen or pencil so they don' t fall back.

Step 7 Mount the new wall plate

- You can choose to use the trim plate which comes along with your thermostat. The trim plate is useful if you want to hide marks or holes left on the wall of your old thermostat.
- If the trim plate is to be used, then align the mounting holes on the trim plate and wall plate and press them together
- Pull the wires trough the hole in the middle of the wall plate and attach the wall plate to the wall using the screws sets(screw& anchor) to mount the new wall plate. Be sure to check the alignment of your wall plate before and after the wall plate installation.

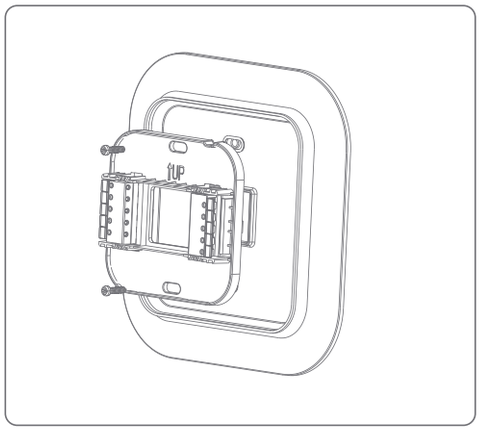

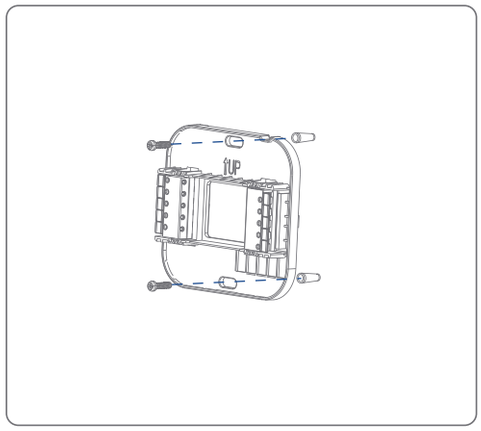

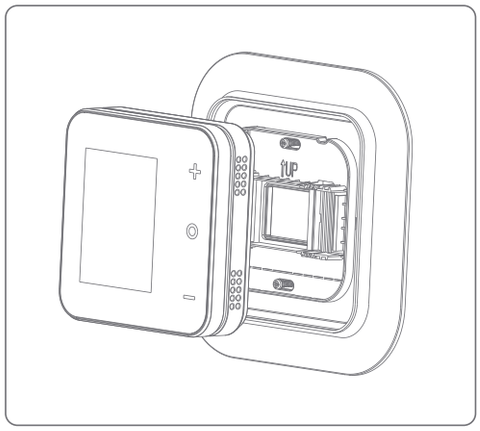

Use the picture you took before as reference to wire, the following chart is a wiring diagram for common systems, please make sure that a C -wire exists in our old thermostat system.

Terminal	Conventional System	Heat Pump System
RC	Power for cooling, 24V	Power for cooling, 24V
RH	Power for heating, 24V	Power for heating, 24V
C	Common wire, 24V	Common wire, 24V
G	Fan	Fan
Y	1st Stage Cool	1st outdoor Stage Heat
Y2	2nd Stage Cool	2nd outdoor Stage Heat
W2	2nd Stage Heating	Auxiliary Hear activated at W2
W/E	1st Stage Heat	Emergency Heat activated at W1
O/B	------	Changeover (reversing valve) connection for heat pump

Conventional Heating and Cooling (Up to Two Stage each)

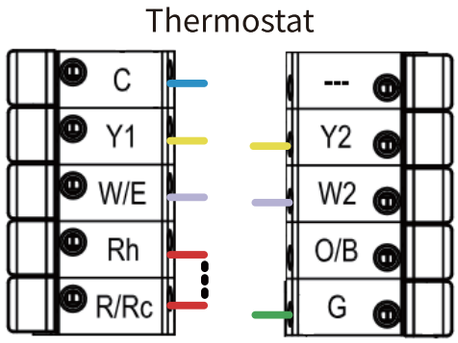

Combined Single Stage Heat and Single Stage Cool with C-Wire Furnace and Air Conditioner

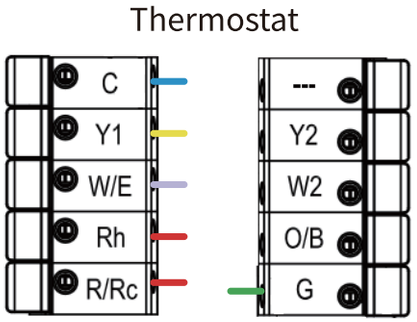

Single Stage Heat/Two Stage Heat Pump with Emergency Heat and Auxiliary Heat with C-Wire

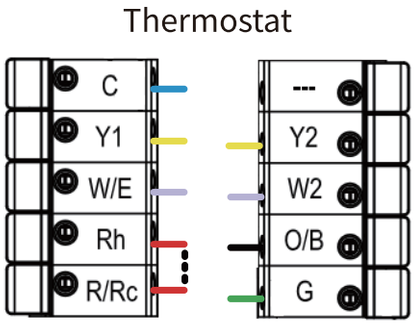

Dual Fuel System-Combined Single/ Two Stage Heat Pump and Single/ Two Stage Furnace with C-wire

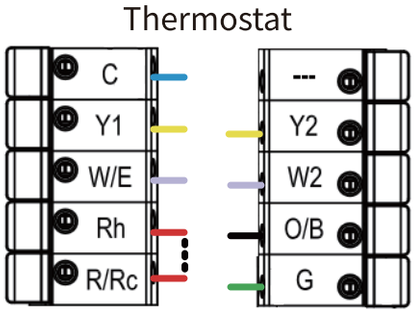

***The switch is used to connect R/RC with RH. If you have two power wires (R/RC and RH), please flip the switch to the disconnect side to disconnect R/RC with RH.**

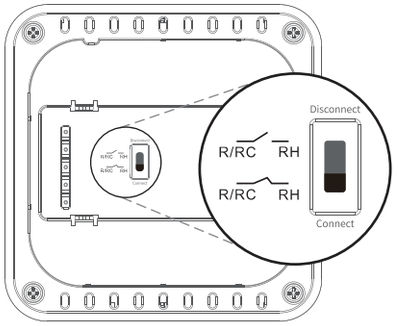

If C- wire does not exist in your system, check the instruction below:

Do you have a spare wire? Yes.

1 . Check for spare wire behind your wall plate of old thermostat, if you have a spare wire, connect it to the C terminal on the new wall plate.
2 . Remove cover from furnace or heating system, open the heating and cooling system to find the control board where you should find the same terminal labels as of the thermostat.
3 . Find the other end of the spare wire, locate the bundle of wire with the same labels as that of your thermostat.
4 . Connect the spare wire to the C-terminal,
5 . Close the cover to the furnace or heating system.

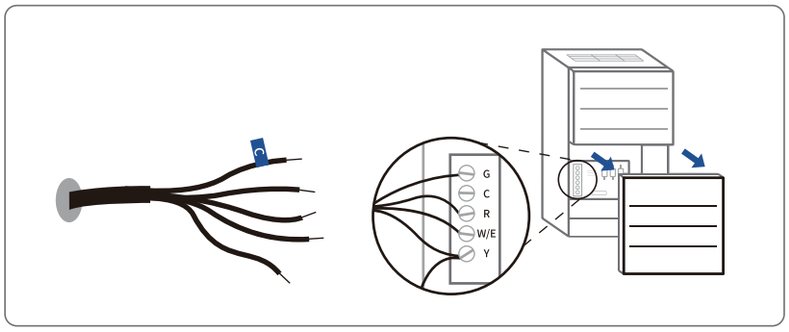

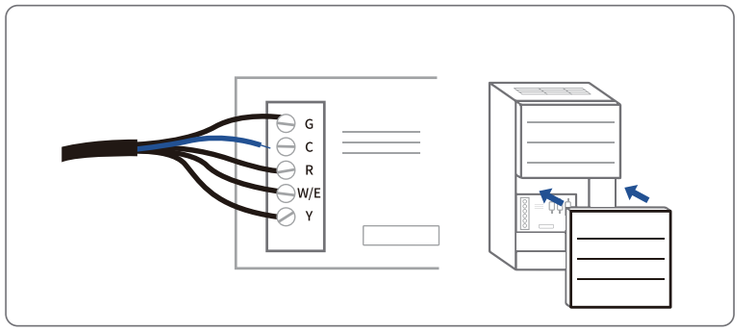

Step 8

Connect the wires to the new wall plate

Insert your remaining wires into the side(not the front) of their corresponding terminal blocks. Pull wires to ensure wires are securely connected. When all wires are connected well, place excess part of the wires back to the wall.

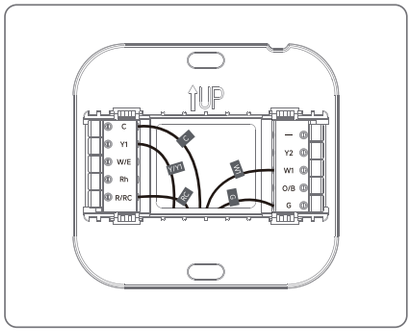

Step 9

Install the thermostat to the wall plate

First aim the four clips of the back plate of the thermostat, the gently push and fit the wiring pole to the terminals on the wall plate.

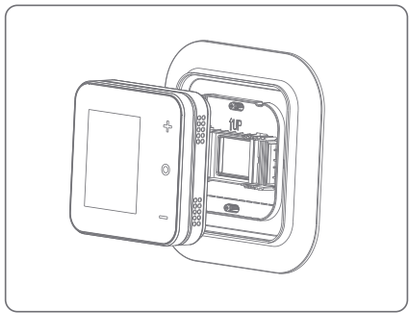

Step 10

Power on and enjoy

Turn on the switch that controls your heating and cooling system, the thermostat will be powered on and prompt you to start the setup. If you have any trouble installing the device or app, check the below information for help, simply visit our website for installation videos.

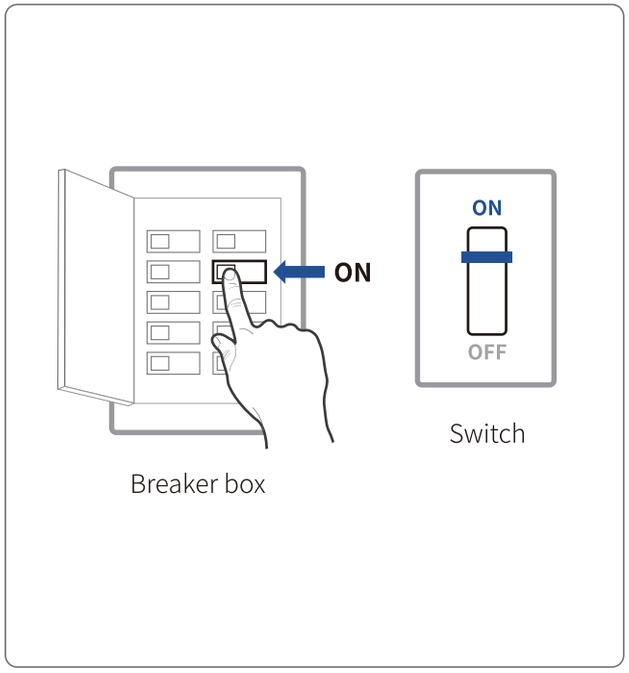

WE ARE HERE TO HELP, 24/7 !

WEBSITE : www.vineconnected.com

EMAIL : info@vineconnected.com

HOTLINE : 1-800-264-3457(09:00am~05:00pm PST)

Congratulations, you did it!

Say hi to your new thermostat ! To complete , follow the instruction on your thermostat screen.

Device Main Screen

Device Initial Setup

For a quick and easy way to begin using your new smart thermostat, the device will automatically direct you to the Initialization Setup process once it' s turned on for the first time.

❶ Heat Type
Select your home' s HVAC type from the options available:

Gas /Oil /Furnace , Electric , Heat Pump, Dual Fuel or no Heating , select according to your heating system.

Below is a list of possible examples which may help you to select correctly:

NOTE : If you are not sure of which one to select, contact 1-800-264-3457

If you have a furnace or boiler installed:

1. Select Gas/ Oil and touch "O" button to next step;
2. Then select appliance or thermostat depending on your personal preferences for fan control, after use "+" or "−" to select "Next" at the bottom and tap "O" to continue.

If you have a electric system:

1. Select Electric and touch "O" to next step;
2. Select "Next" at the bottom and tap "O" to continue.

If you have a heat pump:

1. Select Heat Pump and touch “O” to next step;
2. Specify what the Heat Pump runs when the O/B Reversing Valve is engaged: On Cool runs cooling when O/B engages;
3. Select “Next” at the bottom and tap “O” to continue.

If you have a dual fuel system:

1. Select Dual Fuel and tap “O” to next step;
2. Then follow the on-screen instructions to configure the fossil fuel heating appliance settings;
3. Select “Next” at the bottom to continue to configure the heat pump heating appliance settings.

If you have a no heating appliance:

1. Select No Heating and tap “O” to next step;
2. Select “Next” at the bottom and tap “O” to continue.

❷ Create your Home

After creating an account, signing in to the Vine App, the App will ask you to “Create My Home” or “Join a Home”, if you are owner of the thermostat, select “Create my Home”.
Enter a home name and address to enable weather forecast, timezone and more information on this device, then select “Save Home” and tap O to continue.

❸ Add device

A reliable Wi-Fi connection is required in order to access smart features such as remote access, weather forecast and more. Please follow on-screen instructions to complete the Wi-Fi setup.

If you have your Vine thermostat installed by a professional or if a Vine Thermostat is installed by yourself while it' s not yet connected to Wi-Fi, choose "Yes, it is installed", the App then will start right away to connect your thermostat to Wi-Fi.

a. Select "Wi-Fi Setup" and follow instruction to start Wi-Fi connection.
b. After signing into your account, tap "+" icon on the screen to add new device, which under this case the TJ-550.
c. Follow the the step-by-step instruction in the Vine app. The Wi-Fi connection process will be slightly different dependent to your phone' s operation system(iOS/Android).
d. Congratulation! Now you can enjoy to control your thermostat by App.

Note: If you skip this step during the first time connection, you will be required to connect Wi-Fi by steps: Menu-> Wi-Fi Connect->Wi-Fi Setup and follow the instruction on screen to finish the Wi-Fi connection.

APP Main Screen

Additional Features

Except from the above basic settings, Vine Smart Wi-Fi Thermostat also provides possibility to connect to the Alexa and Google Assistant, hence helps you to control your room temperature by voice control. Follow our instructions below to get connected with Alexa/Google:

How to connect to Alexa?

1 . Download and register the thermostat as instructed in page 1~22.
2 . Download Amazon Alexa App and set up your Alexa-enabled device.
3 . Tap "Menu" button on the upper left corner of Alexa app main screen.
4 . IMPORTANT Step- link the Skill.

1. Tap "Skills" in Alexa app menu.
2. Type and search "Vine Thermostat",then select and tap "enable" to enable the skill
3. Enter Vine Thermostat App login account to Alexa Skill.

Now you can control your thermostat over Amazon Alexa.

5 . Common commands:
Common commands for Alexa to control Vine Thermostat:

Alexa, turn (Device Name) on.
Alexa, turn (Device Name) off.
Alexa, Change (Device Name) mode to Coo/Heat/Auto.
Alexa, Increase (Device Name) by __ degrees.
Alexa, Decrease (Device Name) by __ degrees.
Alexa, Set (Device Name) to __ degrees.
Alexa, what is the (Device Name) set to?
Alexa, what is the temperature of the (Device Name)?

Try out some of the commands and enjoy!

WORKS WITH amazon alexa

How to connect to Google Assistant?

1 . Download and register the thermostat as instructed in page 1~22.
2 . Download Google Home app and setup your Google-enabled device.
3 . Tap "+" button in the middle of the Google Home app screen.
4 . IMPORTANT Step-link the Action.

1. Tap the sidebar menu on the upper left corner of the main page of Google Home, select Home Control" .
2. Tap the "+" button on the lower right corner and search for "Vine Thermostat" .
3. Tap open "Vine Thermostat" and select country, then enter app account/password and tap "Link Now" to link your Vine account to Google.
4. Enter Vine Thermostat login account to Google Skill.

Now you can control your thermostat over Google Home.

Control your smart device with Google Home
Common commands for Google Home to control Vine Thermostat:

Hey Google, what' s the __ temperature?
Hey Google, make it warmer (or cooler)
Ok Google, set the temperature to __ degrees
Ok Google, raise (or lower) the temperature __ degrees
"Ok Google, what is the current temperature in the Bedroom?
"Hey Google, what' s the Living Room set to?
"Ok Google, what' s the temperature of my thermostat?
"Ok Google, turn on heat mode in the Bedroom"
"Hey Google, change to automatic mode in the Living Room"
"Ok Google, turn on cool mode in the Bedroom"

NOTE : Google Home currently supports only English Commands.

works with the Google Assistant

Limited Warranty

THIS DOCUMENT CONSISTS OF IMPORTANT LIMITED WARRANTY INFORMATION REGARDING YOUR CLAIMS AND ACCOUNTABILITY, AS WELL AS RESTRICTIONS AND EXCLUSIONS THAT MAY APPLY TO YOU.

1. WHAT THIS LIMITED WARRANTY ENTAILS; DURATION OF COVERAGE

VINE CONNECTED, Pleasanton, California USA, warrants to the owner of the enclosed product that the product contained in this box will be free from defects in materials and workmanship for a period of two years from the date of delivery following the original retail purchase. If the Product fails to conform to this Limited Warranty during the Warranty Period, VINE CONNECTED will, at its sole discretion, either (a) repair or replace any defective Product or component; or (b) accept the return of the Product and refund the money actually paid by the original purchaser for the Product. Repair or replacement may be made with a new or refurbished product or components, at VINE CONNECTED' s sole discretion. If the Product or a component incorporated within it is no longer available, VINE CONNECTED may, at its sole discretion, replace the Product with a similar product of similar function. This is your sole and exclusive remedy for breach of this Limited Warranty. Any Product that has either been repaired or replaced under this Limited Warranty will be covered by the terms of this Limited Warranty for the longer of (a) ninety days from the date of delivery of the repaired Product or replacement Product, or (b) the remaining Warranty Period. This Limited Warranty is transferable from the original purchaser to subsequent owners, but the Warranty Period will not be extended in duration or expanded in coverage for any such transfer.

2. TOTAL SATISFACTION RETURN POLICY

If you are the original purchaser of the Product and you are not satisfied with this Product for any reason, you may return it in its original condition within thirty days of the original purchase and receive a full refund.

3. WARRANTY TERMS; HOW TO RECEIVE SERVICE IF YOU WANT TO CLAIM UNDER THIS LIMITED WARRANTY

Before making a claim under this Limited Warranty, the owner of the Product must (a) notify VINE CONNECTED of the intention to claim by visiting vineconnected.com/support during the Warranty Period and providing a description of the alleged failure, and (b) comply with VINE CONNECTED' return shipping instructions. VINE CONNECTED will have no warranty obligations with respect to a returned Product if it determines, in its reasonable discretion after examination of the returned Product, that the Product is an Ineligible Product (defined below). VINE CONNECTED will bear all costs of return shipping to owner and will reimburse any shipping costs incurred by the owner, except with respect to any Ineligible Product, for which owner will bear all shipping costs.

4. WHAT THIS LIMITED WARRANTY DOES NOT COVER

This Limited Warranty does not cover the following (collectively "Ineligible Products"): (i) Products marked as "sample" or "Not for Sale", or sold "AS IS"; (ii) Products that have been subject to: (a) modifications, alterations, tampering, or improper maintenance or repairs; (b) handling, storage, installation, testing, or use not in accordance with the User' s Guide or other instructions provided by VINE CONNECTED; (c) abuse or misuse of the Product; (d) breakdowns, fluctuations, or interruptions in electric power or the telecommunications network; or (e) Acts of God, including but not limited to lightning, flood, tornado, earthquake, or hurricane; or (iii) any non-VINE CONNECTED branded hardware products, even if packaged or sold with VINE CONNECTED hardware. This Limited Warranty does not cover consumable parts, including batteries, unless damage is due to defects in materials or workmanship of the Product, or software (even if packaged or sold with the product). VINE CONNECTED recommends that you use only authorized service providers for maintenance or repair. Unauthorized use of the Product or software can impair the Product' s performance and may invalidate this Limited Warranty.

5. DISCLAIMER OF WARRANTIES

EXCEPT AS STATED ABOVE IN THIS LIMITED WARRANTY, AND TO THE MAXIMUM EXTENT PERMITTED BY APPLICABLE LAW, VINE CONNECTED DISCLAIMS ALL EXPRESS, IMPLIED, AND STATUTORY WARRANTIES AND CONDITIONS WITH RESPECT TO THE PRODUCT, INCLUDING THE IMPLIED WARRANTIES OF MERCHANTABILITY AND FITNESS FOR A PARTICULAR PURPOSE. TO THE MAXIMUM EXTENT PERMITTED BY APPLICABLE LAW, VINE CONNECTED ALSO LIMITS THE DURATION OF ANY APPLICABLE IMPLIED WARRANTIES OR CONDITIONS TO THE DURATION OF THIS LIMITED WARRANTY.

6. LIMITATION OF DAMAGES

IN ADDITION TO THE ABOVE WARRANTY DISCLAIMERS, IN NO EVENT WILL VINE CONNECTED BE LIABLE FOR ANY CONSEQUENTIAL, INCIDENTAL, EXEMPLARY, OR SPECIAL DAMAGES, INCLUDING ANY DAMAGES FOR LOST DATA OR LOST PROFITS, ARISING FROM OR RELATING TO THIS LIMITED WARRANTY OR THE PRODUCT, AND VINE CONNECTED' TOTAL CUMULATIVE LIABILITY ARISING FROM OR RELATED TO THIS LIMITED WARRANTY OR THE PRODUCT WILL NOT EXCEED THE AMOUNT ACTUALLY PAID FOR THE PRODUCT BY THE ORIGINAL PURCHASER.

7. LIMITATION OF LIABILITY

THE VINE CONNECTED ONLINE SERVICES ("SERVICES") PROVIDE YOU INFORMATION ("PRODUCT INFORMATION") REGARDING YOUR VINE PRODUCTS OR OTHER PERIPHERALS CONNECTED TO YOUR PRODUCTS ("PRODUCT PERIPHERALS"). THE TYPE OF PRODUCT PERIPHERALS THAT MAY BE CONNECTED TO YOUR PRODUCT MAY CHANGE FROM TIME TO TIME. WITHOUT LIMITING THE GENERALITY OF THE DISCLAIMERS ABOVE, ALL PRODUCT INFORMATION IS PROVIDED FOR YOUR CONVENIENCE, "AS IS", AND "AS AVAILABLE". VINE CONNECTED DOES NOT REPRESENT, WARRANT, OR GUARANTEE THAT PRODUCT INFORMATION WILL BE AVAILABLE, ACCURATE, OR RELIABLE OR THAT PRODUCT INFORMATION OR USE OF THE SERVICES OR PRODUCT WILL PROVIDE SAFETY IN YOUR HOME. YOU USE ALL PRODUCT INFORMATION, THE SERVICES, AND THE PRODUCT AT YOUR OWN DISCRETION AND RISK. YOU WILL BE SOLELY RESPONSIBLE FOR (AND VINE CONNECTED DISCLAIMS) ANY AND ALL LOSS, LIABILITY, OR DAMAGES, INCLUDING TO YOUR WIRING, FIXTURES, ELECTRICITY.

HOME, PRODUCT, PRODUCT PERIPHERALS, COMPUTER, MOBILE DEVICE, AND ALL OTHER ITEMS AND PETS IN YOUR HOME, RESULTING FROM YOUR USE OF THE PRODUCT INFORMATION, SERVICES, OR PRODUCT. PRODUCT INFORMATION PROVIDED BY THE SERVICES IS NOT INTENDED AS A SUBSTITUTE FOR DIRECT MEANS OF OBTAINING THE INFORMATION. FOR EXAMPLE, A NOTIFICATION PROVIDED THROUGH THE SERVICE IS NOT INTENDED AS A SUBSTITUTE FOR AUDIBLE AND VISIBLE INDICATIONS IN THE HOME AND ON THE PRODUCT, NOR FOR A THIRD-PARTY MONITORING SERVICE THAT MONITORS ALARM STATE.

8. YOUR RIGHTS AND THIS LIMITED WARRANTY

This Limited Warranty gives you specific legal rights. You may also have other legal rights that vary by state, province, or jurisdiction. Likewise, some of the limitations in this Limited Warranty may not apply in certain states, provinces or jurisdictions. The terms of this Limited Warranty will apply to the extent permitted by applicable law. For a full description of your legal rights you should refer to the laws applicable in your jurisdiction and you may wish to contact a relevant consumer advisory service. Please visit our website for the complete disclosure of this statement

vine®

www.vineconnected.com

FCC WARNING

This device complies with part 15 of the FCC Rules. Operation is subject to the following two conditions: (1) this device may not cause harmful interference, and (2) this device must accept any interference received, including interference that may cause undesired operation.

Any changes or modifications not expressly approved by the party responsible for compliance could void the user's authority to operate the equipment.

NOTE: This equipment has been tested and found to comply with the limits for a Class B digital device, pursuant to Part 15 of the FCC Rules. These limits are designed to provide reasonable protection against harmful interference in a residential installation. This equipment generates, uses and can radiate radio frequency energy and, if not installed and used in accordance with the instructions, may cause harmful interference to radio communications. However, there is no guarantee that interference will not occur in a particular installation.

If this equipment does cause harmful interference to radio or television reception, which can be determined by turning the equipment off and on, the user is encouraged to try to correct the interference by one or more of the following measures:

-- Reorient or relocate the receiving antenna.

-- Increase the separation between the equipment and receiver.

-- Connect the equipment into an outlet on a circuit different from that to which the receiver is connected.

-- Consult the dealer or an experienced radio/TV technician for help.

To maintain compliance with FCC’s RF Exposure guidelines, This equipment should be installed and operated with minimum distance between 20cm the radiator your body: Use only the supplied antenna.

IC Caution:

This device complies with Industry Canada's licence-exempt RSSs. Operation is subject to the following two conditions:
(1) This device may not cause interference; and
(2) This device must accept any interference, including interference that may cause undesired operation of the device.

To maintain compliance with RF exposure guidelines, this equipment should be installed and operated with a minimum distance of 20cm between the radiator and your body.

Le présent appareil est conforme aux CNR d'Industrie Canada applicables aux apparei ls radio exempts de licence. L'exploitation est autorisée aux deux conditions suivantes:
(1) l'appareil ne doit pas produire de brouillage, et
(2) l'utilisateur de l'appareil doit accepter tout brouillage radioélectrique subi, même si le brouillage est susceptible d'en compromettre le fonctionnement.

Pour maintenir la conformité aux directives d'exposition aux radiofréquences, cet équipement doit être installé et utilisé avec une distance minimale de 20 cm entre le radiateur et votre corps.