snapmaker | 10W Laser Module

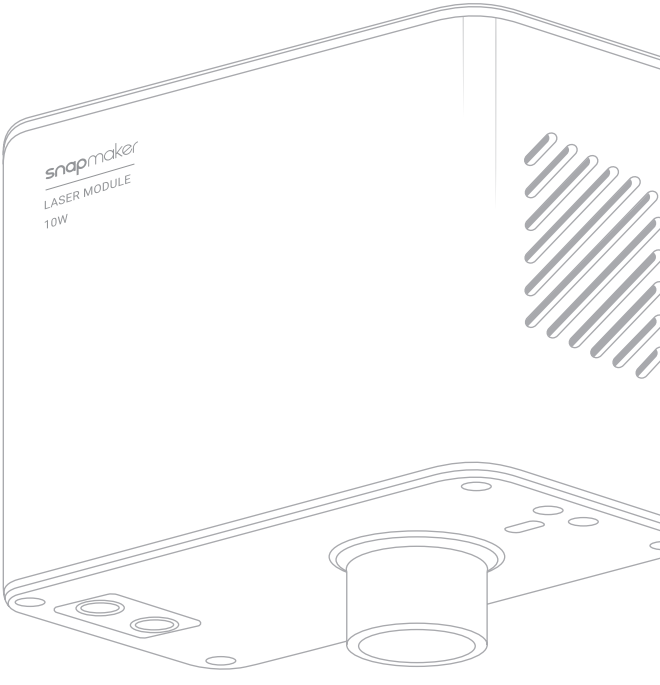

QUICK START GUIDE

MAKE SOMETHING WONDERFUL

Contents

Before You Start	01
Machine Assembly	15
Laser Engraving and Cutting	23
Maintenance	37

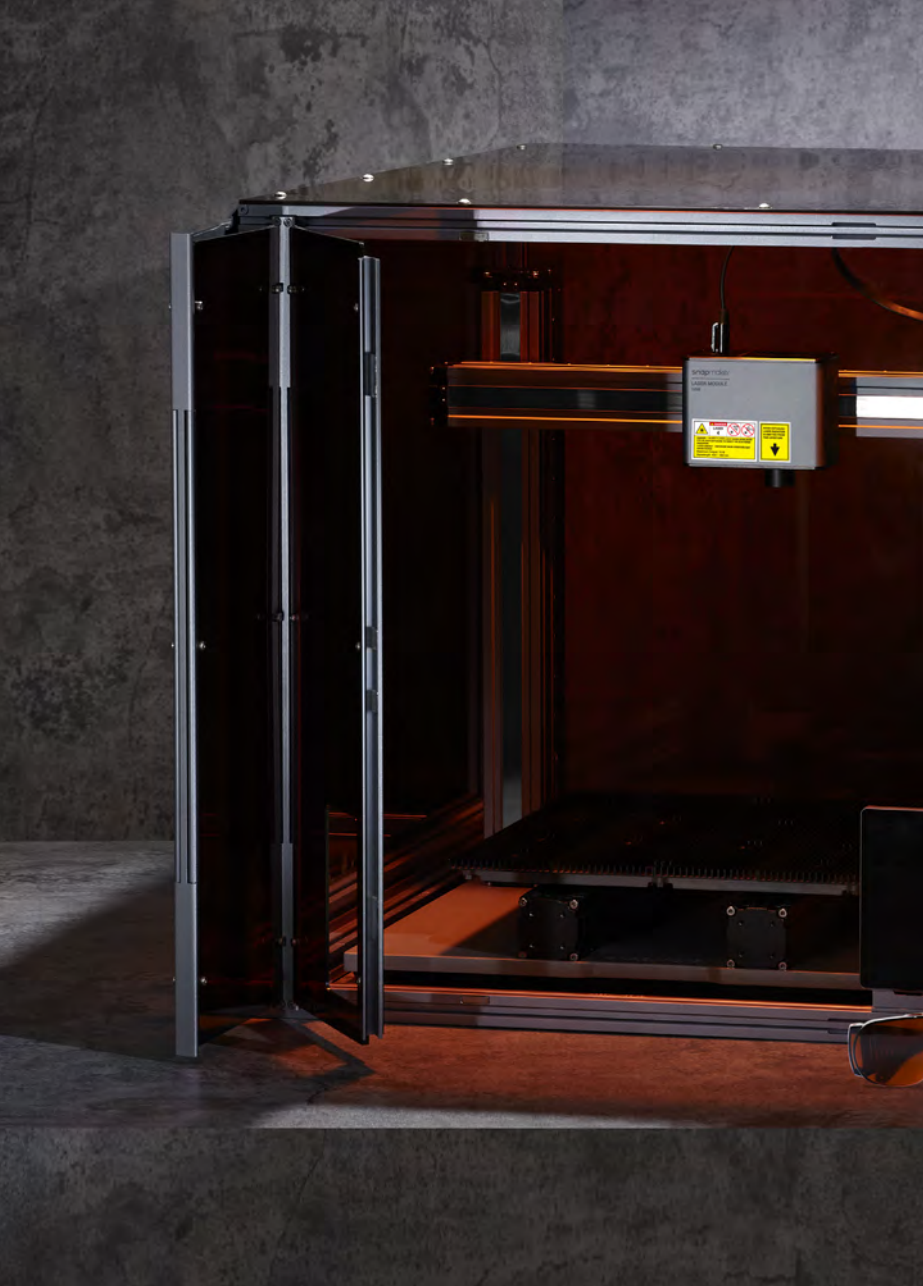
snapmaker
LASER MODULE
WARNING
DANGER
CAUTION

Before You Start

Copyright © 2021 Snapmaker. All rights reserved.
This language version of the guide is verified by the manufacturer (Original Instruction).
No part of this publication, including pictures may be reproduced or made public, whether by printing, photocopying, microfilm or by any other means whatsoever, without the prior written permission of Snapmaker.

1.1 Disclaimer

Ensure that anyone who uses this product knows and understands the contents of this guide to make the most out of it. Failure to read the guide may lead to personal injury, inferior results, or damage to the product. Snapmaker does not assume responsibility and expressly disclaims liability for any personal injury, inferior results, or damage to the product arising out of or in connection with your improper operations or failure to follow the instructions of the guide.

This guide is provided for reference purposes only. Snapmaker does not in any way, expressly or implicitly, warrant the accuracy or completeness of the information provided by this guide. No part of this guide may be reproduced, edited, or revised by any means without the prior written permission of Snapmaker. Snapmaker reserves the right to modify or revise this guide at our sole discretion at any time without notice. You can download the up-to-date version of this guide on our official website: https://support.snapmaker.com.

When making objects using Snapmaker products, you remain responsible for no infringement on any third-party intellectual property rights or violation of any applicable laws or regulations. The application of Snapmaker products in making objects are beyond the control of Snapmaker. For this reason, Snapmaker does not assume responsibility and expressly disclaims liability for any objects made by using Snapmaker products.

The conditions or methods used for the assembly, handling, storage, use, maintenace, or disposal of this product are beyond the control of Snapmaker. For this reason, Snapmaker does not assume responsibility and expressly disclaims liability for loss, injuries, damage, or expense arising out of or in any way connected with the assembly, handling, storage, use, maintenance, or disposal of this product. You remain responsible for following the instructions of the guide, the applicable laws and regulations, and the safety regulations in the assembly, handling, storage, use, maintenance, or disposal of this product.

1.2 Safety Notes and Compliance

General Safety Information

Follow the applicable local laws and regulations in the operation and application of this product.

Follow the instructions of the guide to use and maintain this product for safety purposes.

Always operate this product indoors on a solid horizontal table or workbench. Do not expose

this product to rain or wet conditions.
Minors are only allowed to use this product under adult supervision and assistance.
Ensure that bystanders also read and understand all the safety notes of this product and keep bystanders away while operating this product for safety purposes.
Stay alert, watch what you are doing, and pay attention to the surrounding environment when operating this product. Do not use this product while you are tired or under the influence of drugs, alcohol, or medication.
Do not reach inside the product or touch the moving parts while the product is still in operation, as it may cause injury.
Do not leave the product unattended while it is still on.
Always unplug the power cord from the electrical outlet before performing maintenance or modifications.

Turn off the machine immediately and stop using this product if any of the following occurs:
- You smell burning in this product at any point.
- You see any damage to the interior components of this product.
- The machine stops working unexpectedly.
- Unusual lights, sparks, or sounds come out of this product which has never occurred previously.

Laser Safety Information
The 10W Laser Module is a Class 4 laser product. You should operate this product only if you have sufficient knowledge of (i) the physical properties of laser radiation, (ii) Laser Hazard Classes and associated health implications, and (iii) safety measures.
This product must be used together with the Enclosure released by Snapmaker or certified partners of Snapmaker. Please follow the Quick Start Guide of the Enclosure to install and use the Enclosure. During operation, the Enclosure helps to prevent the risk of laser leakage by effectively filtering laser radiation and pausing the ongoing job if any door of the Enclosure is opened.
All the users and bystanders must correctly wear the laser safety goggles released by Snapmaker or certified partners of Snapmaker during operation. Before use, please purchase sufficient pairs of the laser safety goggles for all the people present.

An air purifier should be used depending on the type and constituent of the materials you are going to use, as some materials may release hazardous and toxic fumes when being laser engraved or cut. Ensure that the air purifier you choose is effective enough to protect human health and prevent environmental pollution.
During machine operation, do not touch the laser aperture nor expose yourself to the laser beam.
Remove any reflective material from the work area underneath the 10W Laser Module, as it may cause scattered radiation and poses safety risks. Ensure that there is no reflective material on the work area during operation.
Remove any inflammable and explosive material from the work area underneath the 10W Laser Module, as it may cause a fire. Ensure that there is no inflammable and explosive material on the work area during operation.

Information of the Laser Safety Goggles in the Parts List

The laser safety goggles block direct, reflected, and scattered laser beams and radiation with the wavelength between 190 and 540 nanometers (nm) from entering your eyes and have an optical density higher than 6 (OD 6+), thus providing protection while you operate the 10W Laser Module.
The lenses might be burned when subjected to high-energy laser beams, and if this happens, you must stop using the damaged goggles and use a new pair. The lenses are made of polycarbonate. Avoid scraping them. Use PH neutral detergent or water to clean them.

The laser safety goggles are specially designed for this product. However, the laser safety goggles may not be able to provide you with effective protection when you operate other products. Wear proper protective equipment depending on the product you operate. Snapmaker does not assume responsibility and expressly disclaims liability for any personal injury or property damage suffered by the user or any third party from wearing this pair of laser safety goggles to operate other products.

FCC Compliance

This equipment has been tested and found to comply with the limits for a Class B digital device, pursuant to part 15 of the FCC Rules. These limits are designed to provide reasonable protection against harmful interference in a residential installation. This equipment generates, uses and can radiate radio frequency energy and, if not installed and used in accordance with the instructions, may cause harmful interference to radio communications. However, there is no guarantee that interference will not occur in a particular installation. If this equipment does cause harmful interference to radio or television reception, which can be determined by turning the equipment off and on, the user is encouraged to try to correct the interference by one or more of the following measures:

- Reorient or relocate the receiving antenna.
- Increase the separation between the equipment and receiver.
- Connect the equipment into an outlet on a circuit different from that to which the receiver is connected.
- Consult the dealer or an experienced radio / TV technician for help.

Caution: Any changes or modifications to this device not explicitly approved by manufacturer could void your authority to operate this equipment.

This device complies with part 15 of the FCC Rules. Operation is subject to the following two conditions:

(1) This device may not cause harmful interference, and (2) this device must accept any interference received, including interference that may cause undesired operation.

This equipment complies with FCC radiation exposure limits set forth for an uncontrolled environment. This equipment should be installed and operated with a minimum distance of 20 cm between the radiator and your body.

ISEDC Compliance

This device complies with Innovation, Science and Economic Development Canada License exempt RSS standard(s). Operation is subject to the following two conditions:

(1) this device may not cause harmful interference, and (2) this device must accept any interference received, including inter ference that may cause undesired operation of the device.

The device complies with RF exposure guidelines, and users can obtain Canadian information on RF exposure compliance. The minimum distance from body to use the device is 20 cm.

Le présent appareil est conforme aux CNR d' Innovation, Sciences et Développement économique Canada applicables aux appareils radio exempts de licence. L'exploitation est autorisée aux deux conditions suivantes :

(1) l'appareil nedoit pas produire de brouillage, et(2) l'utilisateur de l'appareil doit accepter tout brouillage radioélectrique subi, même si le brouillage est susceptible d'en compromettre le fonctionnement.
Le présent appareil est conforme Après examen de ce matériel aux conformité ou aux limites d'intensité de champ RF, les utilisateurs peuvent sur l'exposition aux radiofréquences et compliance d'acquérir les informations correspondantes. La distance minimale du corps à utiliser le dispositif est de 20cm.

1.3 Labels on the Product

Safety Labels	Hazard	Warning	Location
IEC 60825 FDA	Laser radiation	Class 4 laser product. Avoid eyes and skin exposure to direct or scattered radiation.	On the 10W Laser Module
IEC 60825 / FDA	Laser aperture	Laser radiation is emitted from this aperture.	On the 10W Laser Module

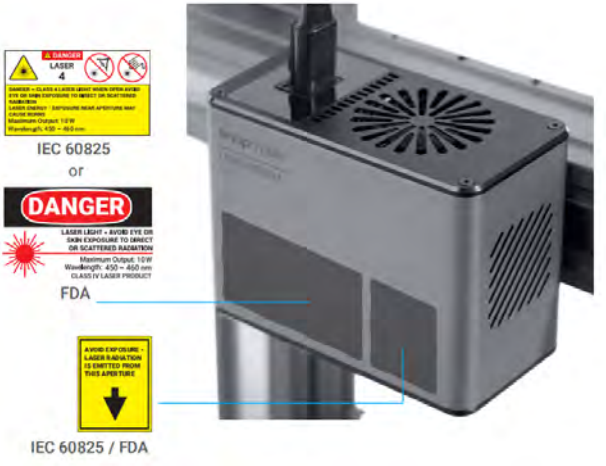

1.4 Specifications

10W Laser Module[1]	
Product Model	TH-L-P100-W450
Dimensions (W × D × H)	114 mm × 60 mm × 102 mm
Weight	0.63 kg
Frame Material	Aluminum Alloy
Input Voltage	24 V
Laser Type	450 nm–460 nm Semi-conductor Laser
Laser Power	10 W
Frequency Range	2402-2480MHz
Transmit power	9.23dBm(For EU), 11.35dBm(For US/CAN)
Laser Class without Enclosure [2] Protection	Class 4
Laser Class with Enclosure [2] Protection	Class 1
Operating Temperature	0°C -35°C

Work Area	320 mm × 350 mm (A350 / A350T / F350) 230 mm × 250 mm (A250 / A250T / F250)
Laser Spot Dimensions	≤ 0.05 mm × 0.2 mm
Maximum Engraving Speed	6000 mm/min
Maximum Cutting Speed[3]	600 mm/min
Compatible Machine Models	Snapmaker 2.0 A250, Snapmaker 2.0 A350, Snapmaker 2.0 A250T, Snapmaker 2.0 A350T, Snapmaker 2.0 A250ENT, Snapmaker 2.0 A350ENT, Snapmaker 2.0 A250DET, Snapmaker 2.0 A350DET, Snapmaker 2.0 F250, Snapmaker 2.0 F350, Snapmaker 2.0 F250DE, Snapmaker 2.0 F350DE
Supported Materials for Engraving	Basswood, Pinewood, Plywood, Beech, Walnut, Bamboo, MDF, Painted Metal, Copper Clad Laminate, Tinplate, Stainless Steel, Anodized Aluminum, Dark Glass, Slate, Brick, Ceramic, Jade, Marble, Shale, Leather, Fabric, Canvas, Corrugated Paper, Cardboard, Plastic, Dark Acrylic (Blue excluded), etc.
Supported Materials for Cutting	Basswood, Pinewood, Plywood, Beech, Walnut, Bamboo, MDF, Leather, Fabric, Canvas, Corrugated Paper, Cardboard, Plastic, Dark Acrylic (Blue excluded), etc.

Laser Safety Goggles[1]	
Wavelength Range and Optical Density (OD)	190 nm-540 nm OD6+ 800 nm-1700 nm OD4+
Visible Light Transmittance	8.80%
Application	Violet/UV Light, Green, Blue, and Infrared Laser
Dimensions (W × D × H)	155 mm × 140 mm × 60 mm
Lense Material	Polycarbonate

Note:
[1] The specifications listed might be slightly changed in any meaningful way when Snapmaker refines the product.
[2] Enclosure particularly refers to the Enclosure released by Snapmaker or certified partners of Snapmaker.
[3] The data is obtained based on the 1.5 mm basswoods. Depending on your material, the cutting speed might vary.

1.5 Parts List

Quick Start Guide × 1

10W Laser Module × 1

Laser Safety Goggles × 1

M4 × 8 Hex Socket Head Screw × 6

Acrylic Sheet (3 mm) × 1

Basswood Board (5 mm) × 1

Calibration Target × 1

Calibration Card × 1

Anodized Aluminum Plate (2 mm) × 1

Laser Lens Protector × 1

Cotton Swab × 5

The laser lens protector is a spare part for maintenance.

1.6 Used Symbols

	CAUTION	Ignoring this type of message might result in malfunction or damage of the machine and injuries to users.
	NOTE	Details you should be aware of throughout the process.
	TIPS	Tips offer you convenient operations and additional options.

1.7 Preparations

1.7.1 Software Update

Download the latest version of Snapmaker Luban from https://luban.xyz. If you have already installed Snapmaker Luban on your computer, ensure that its version is 4.1.0 or later. This guide takes version 4.1.0 as a demonstration to laser engrave and cut with the 10W Laser Module.

1.7.2 Firmware Update

Before use, update the firmware to version 1.14.0 or later. For Touchscreen installed with the firmware of V1.9.0 or later, you can update via Wi-Fi or USB flash drive. For firmware previous to V1.9.0, update only via USB flash drive.

: Turn on the machine > connect your machine to a Wi-Fi network > swipe left on the Touchscreen > tap **Settings** > **Firmware Update** > **Check for Updates** > **Update Now** > **Complete**.

: Download our firmware from https://support.snapmaker.com > insert the USB flash drive into the controller > turn on the machine > swipe left on the Touchscreen > tap **Files** > tap **USB** > tap the firmware file to update.

1.7.3 Hardware Preparation

① Prepare a machine compatible with the 10W Laser Module. You can choose from the following Snapmaker 2.0 models: A250, A350, A250T, A350T, A250ENT, A350ENT, A250DET, A350DET, F250, F350, F250DE, and F350DE.
② Prepare a laser engraving and cutting platform matched with the work area of the machine you prepared in Step ①.
③ Prepare a Snapmaker Enclosure matched with the size of the machine you prepared in Step ①.
If you already have the Enclosure installed on your machine, refer to Scenario 1 in Machine Assembly to install the 10W Laser Module and other hardware.
If the Enclosure is not installed on your machine, refer to Scenario 2 in Machine Assembly to install the 10W Laser Module and other hardware.
④ Prepare sufficient pairs of the laser safety goggles for all the users and bystanders present.

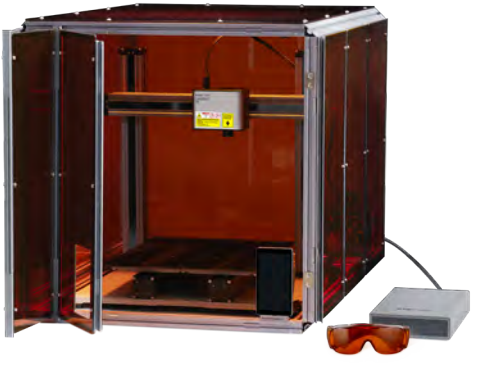

1.7.4 Tool Preparation

Get the screwdriver ready. The screwdriver head H2.5 is used for assembling the machine. The other heads are used for maintenance. Before use, ensure that the screw bit holder is put back into the handle.

1.8 About this Quick Start Guide

This Quick Start Guide takes Snapmaker 2.0 A350T as a demonstration. All steps and illustrations apply to the assembly and use of the 10W Laser Module on other compatible machine models. The 10W Laser Module can be used together with the Rotary Module for 4-axis laser engraving and cutting. For more information about how to use the 10W Laser Module together with the Rotary Module, refer to the User Manual of the 10W Laser Module on https://support.snapmaker.com.

The Quick Start Guide is intended to guide you through the first operation of the 10W Laser Module. Here is the workflow: calibrate the machine > fasten the material > use Camera Capture to determine the laser engraving and cutting position > start laser engraving and cutting in Snapmaker Luban. For other workflows, including the Work Origin method, refer to the User Manual of the 10W Laser Module on https://support.snapmaker.com.

snapmaker
LASER MODULE

Machine Assembly

Scenario 1: Enclosure Installed on the Machine

If you already have the Enclosure installed on your machine, move the toolhead and platform to proper places as illustrated below that are convenient for detaching, demonstrated in 3.2 Change Machine Functions in the Quick Start Guide of the Enclosure.

Turn off the machine and detach the existing toolhead and platform. Then, follow Steps 01-04 to install the laser engraving and cutting platform and the 10W Laser Module.

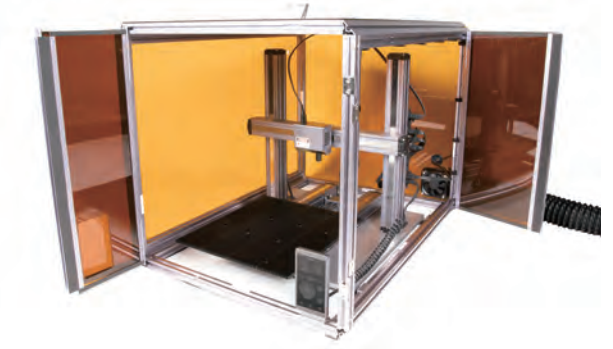

Scenario 2: Enclosure Not Installed on the Machine

If the the Enclosure is not installed on your machine, follow Step 01-04 to install the laser engraving and cutting platform and the 10W Laser Module. Then, install the Enclosure according to its Quick Start Guide.

01 Attach the laser engraving and cutting platform to the support platform of the machine.

A350 / A350T / F350

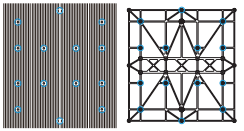

A250 / A250T / F250

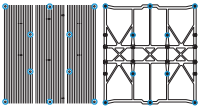

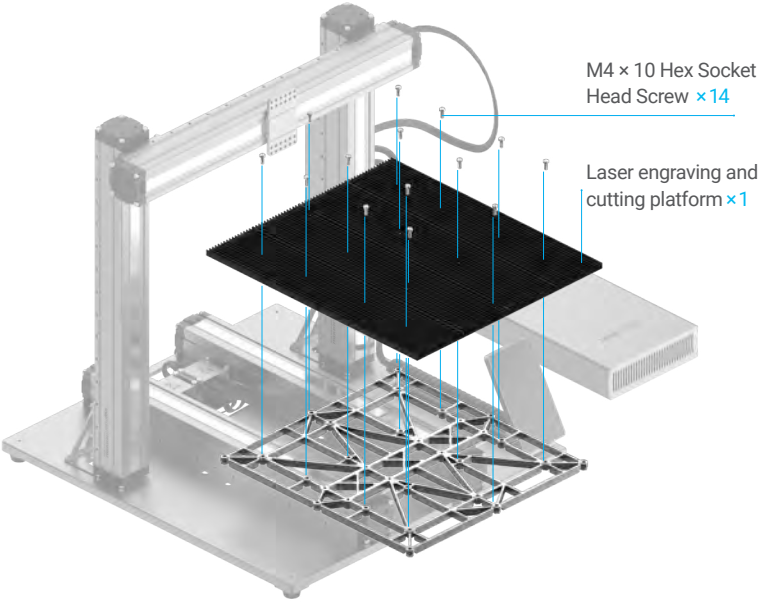

Ensure that the power switch is in the **Off** position.

02 Attach the 10W Laser Module to the slider on the X Axis.

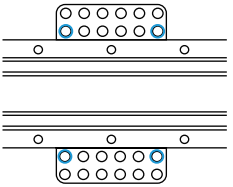

Ensure that the 10W Laser Module is installed with the air concentrator hood vertically downward, or the machine cannot emit laser beam after turned on. If the Touchscreen shows Toolhead Not Installed Correctly, you need to turn off the machine and reinstall the toolhead.

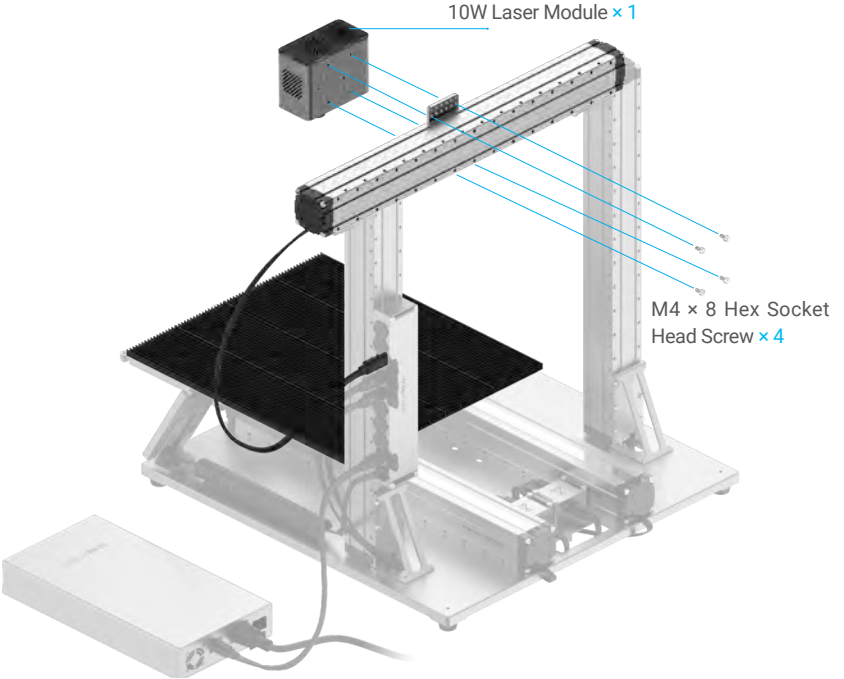

03 Connect the 10W Laser Module to the Toolhead port of the controller.

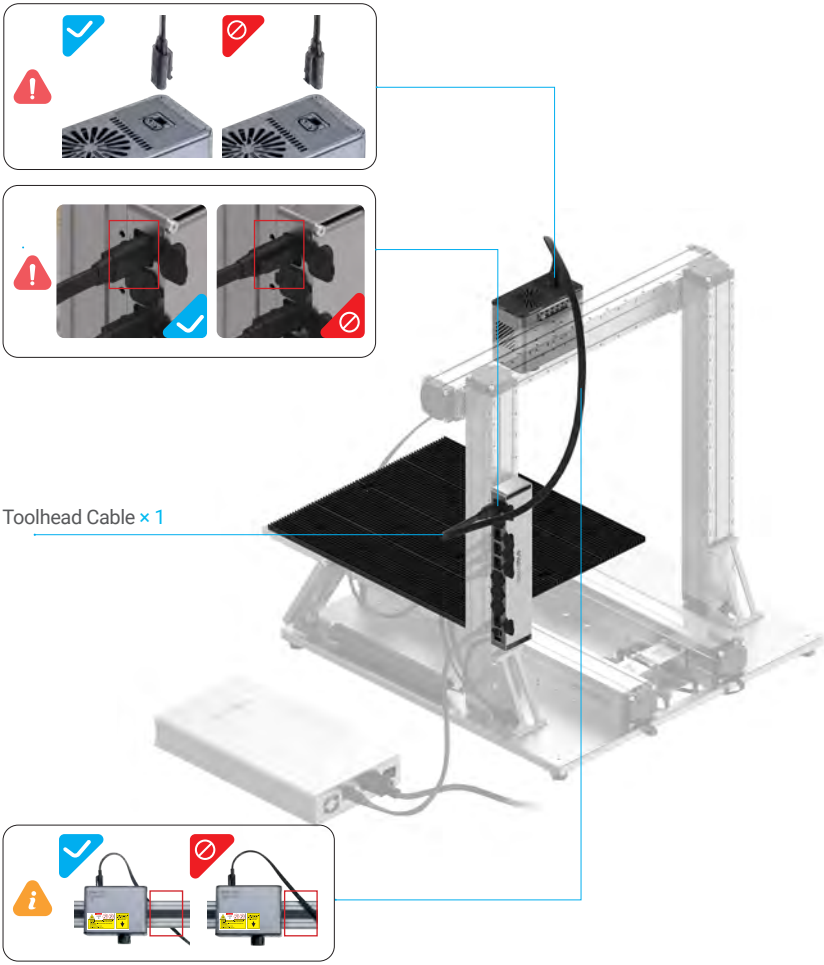

Do not connect or disconnect any cables when the machine is turned on.

04 Attach the cable holder to the Z Axis, and then lock the toolhead cable into place.

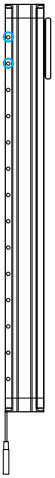

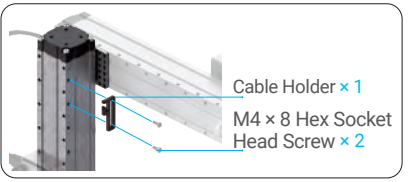

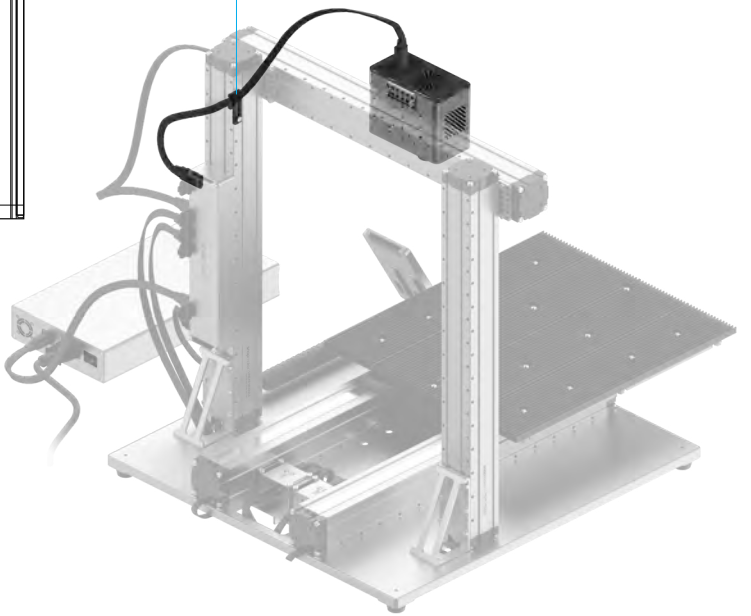

Ensure that there is enough cable length for the toolhead to move.

05 Refer to the Quick Start Guide of the Enclosure to install the Enclosure.

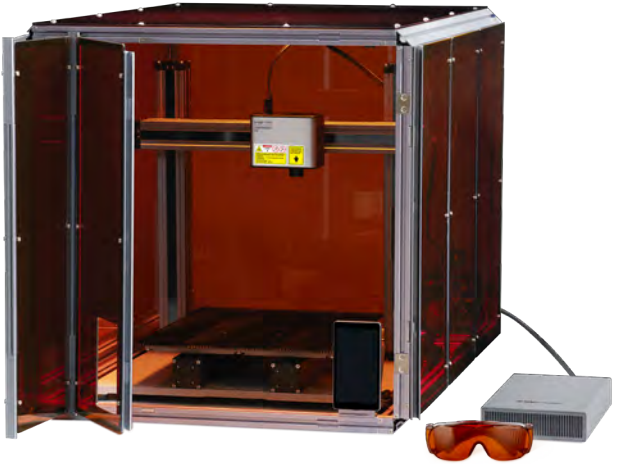

Congratulations!

Assemble successfully! You are now ready to start laser engraving and cutting!

Laser Engraving and Cutting

3.1 Read Safety Notes
3.2 Calibrate Toolhead Focus
3.3 Calibrate the Thickness Measurement System
3.4 Calibrate the Camera
3.5 Fasten the Material
3.6 Prepare the G-code File and Start Engraving and Cutting

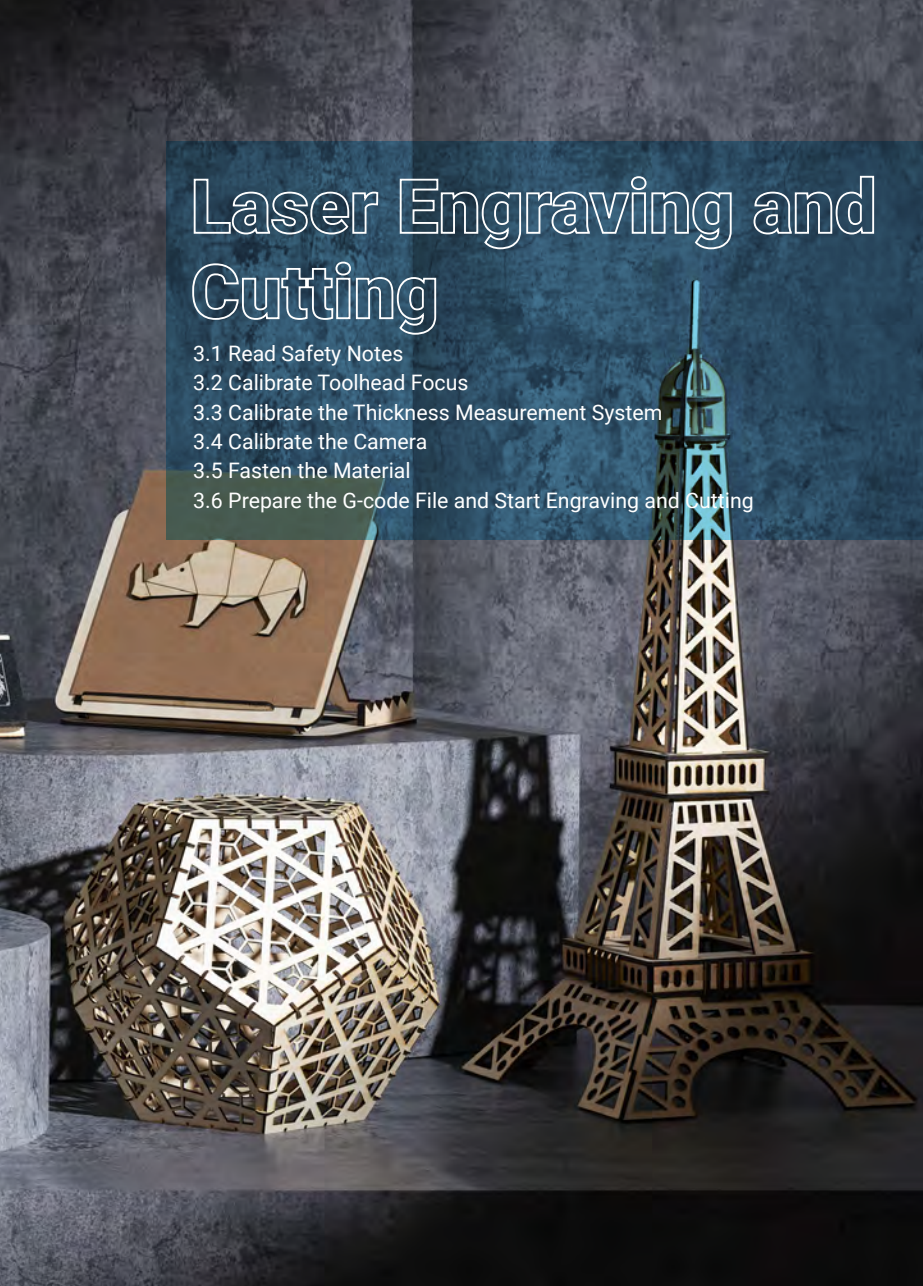

3.1 Read Safety Notes

Turn on the machine, read the Safety Notes, and tick off the checkbox. Then, click **Get Started**, and the machine will automatically enter the Guide process.

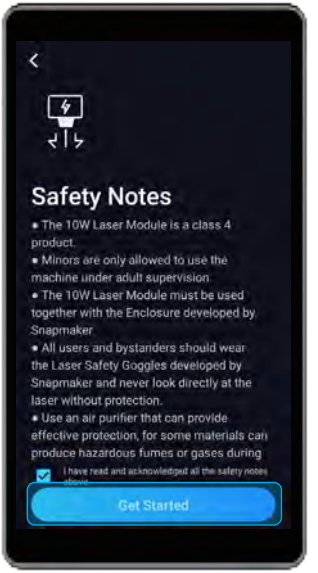

The initial guide, which helps you get started, will appear only once. If you need to launch it again, swipe left on the Home Screen of the Touchscreen > select **Settings** > tap **Guides**.

3.2 Calibrate Toolhead Focus

How It Works: Focal Point

To achieve the best focusing result, let the focal point fall right on the surface of the material throughout engraving and cutting.

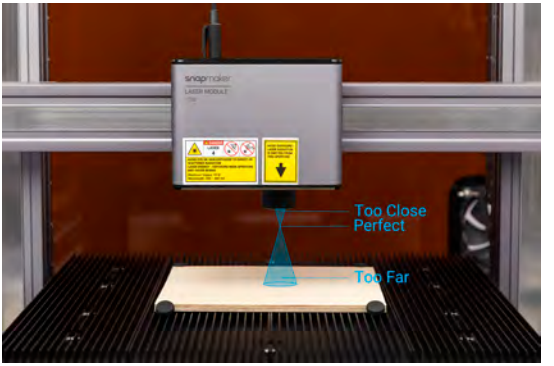

How It Works: Auto Focus

The focal length is the distance from the center of the lens to the focal point of the lens. For the 10W Laser Module, the focal length (f) is a fixed value. Besides, the distance (h1) from the center of the lens to the bottom of the air concentrator hood is also known to the machine. Based on these two values, the machine can calculate the lifting height (h2) of the toolhead after the toolhead touches the laser engraving and cutting platform, and thus do auto focusing.

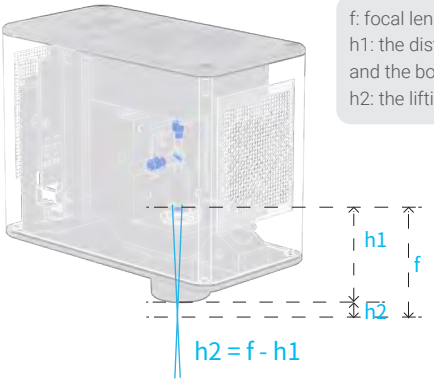

f: focal length
h1: the distance between the center of the lens and the bottom of the air concentrator hood
h2: the lifting height of the toolhead

Start Toolhead Focus Calibration

① On the Touchscreen, tap **Start** to enter Toolhead Focus Calibration. The machine will move the 10W Laser Module to the central position above the laser engraving and cutting platform.

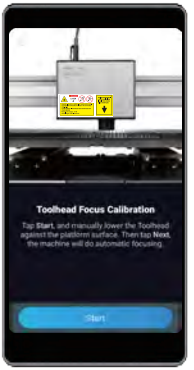

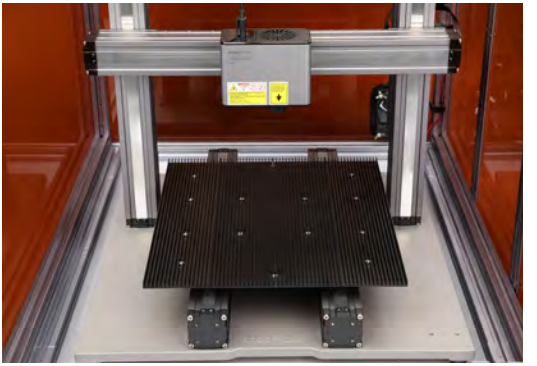

② Place the calibration card or a piece of A4 paper between the 10W Laser Module and laser engraving and cutting platform. Keep adjusting the **Z Offset** until you feel slight resistance when you pull out the calibration card, and it should be wrinkled when you push it forward. Then, tap **Next** to finish Toolhead Focus Calibration.

3.3 Calibrate the Thickness Measurement System

How It Works: Measure Material Thickness

The 10W Laser Module contains a thickness measurement system that uses the triangulation technique to measure material thickness. Firstly, the red laser emitter projects a red dot on the material surface. Then, the camera captures an image of the red dot. Finally, the thickness measurement system analyzes the image data to calculate the material thickness. Before you use the thickness measurement system for the first time, you need to calibrate its initial parameters.

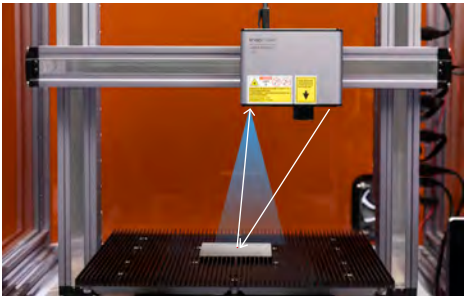

The red laser emitter is a Class 2 laser product. Do not look directly into its aperture when laser beam is emitted.

Start Thickness Measurement Calibration

① Place the provided calibration target on the center of the laser engraving and cutting platform, and tap **Start**.

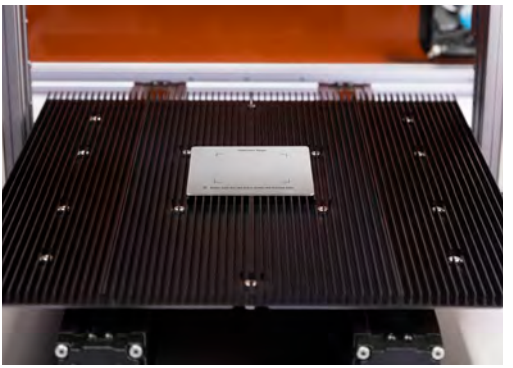

② Ensure that the red dot falls within the framed area of the calibration target, and click **Capture**. The machine will automatically capture the first and second calibration points to complete the calibration and measure the thickness of the calibration target to verify the result.

If you have detached the 10W Laser Module from the X Axis or reassembled the machine, recalibrate the thickness measurement system: swipe left on the Home Screen of the Touchscreen > select **Settings** > tap **10W Laser** > tap **Thickness Measurement Calibration**.

3.4 Calibrate the Camera

① Remove the calibration target. Fasten a piece of blank A4 paper on the center of the laser engraving and cutting platform, and click **Next**.

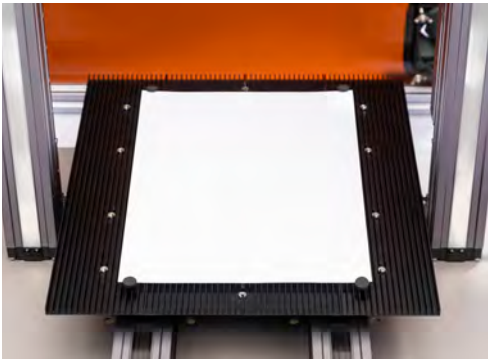

② Put on the laser safety goggles, and tap **Start**. The machine will cut a square on the paper and use the square to calibrate the camera.

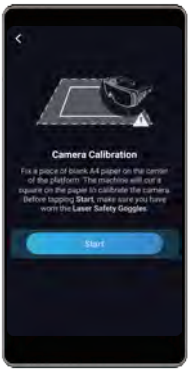

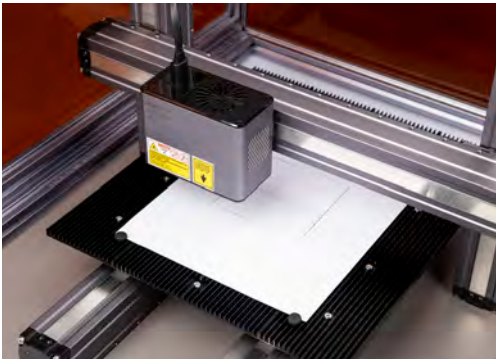

If you have detached the 10W Laser Module from the X Axis or reassembled the machine, recalibrate the camera: swipe left on the Home Screen of the Touchscreen > select **Settings** > tap **10W Laser** > tap **Camera Calibration**.

3.5 Fasten the Material

① Choose a material that is safe for laser engraving and cutting and has a flat surface.
② Remove the cut paper. Fasten the material on the center of the laser engraving and cutting platform by using the silicone plugs.

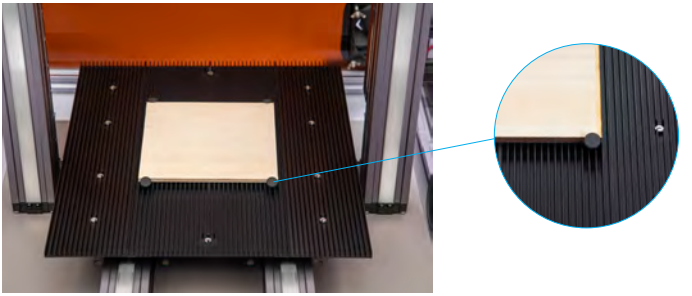

You can also fasten materials using other tools.

Ensure that the clamp set will not collide with any portions of the machine.

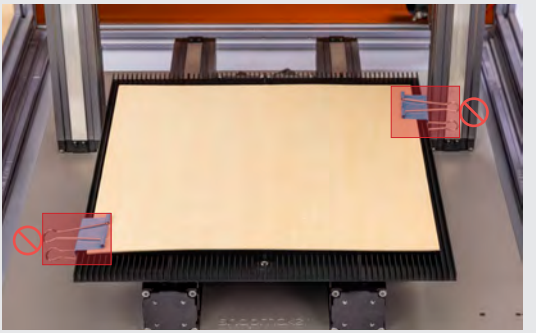

3.6 Prepare the G-code File and Start Engraving and Cutting

① On your computer, launch the Snapmaker Luban. On the menu bar, select **Settings** > **Machine Settings** to select the machine model and the type of the **Laser Module**.

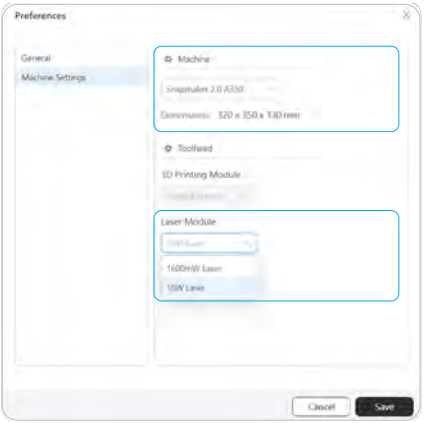

② Ensure that your computer and machine are connected to the same Wi-Fi network, and take the following steps to connect Snapmaker Luban with your machine: enter **Workspace** > **Connection** > select **Wi-Fi** > click **Refresh** > select your machine from the drop-down list > click **Connect** > tap **Yes** on the Touchscreen.

You can also connect Snapmaker Luban to your machine using the USB cable.

③ On the top-left corner of Snapmaker Luban, click **Back** to go back to the **Home** page. Select **Laser** > **3-axis** to enter the **Laser G-code Generator** . After finishing **Job Setup**, select **Camera Capture** > **Add Background**, and click **Start**. The machine will take a photo of the work area and use it as the background for the engraving and cutting object. After the photo is captured, click **Confirm**.

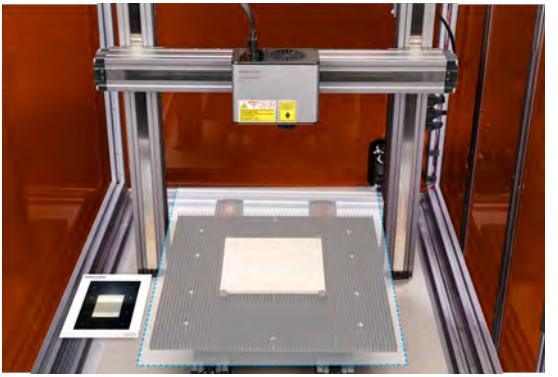

If the captured image is twisted out of shape, click **Calibrate** to manually calibrate the camera.

ⓐ Zoom into the image and move the lines until they perfectly match the square, and then click **Confirm** > **Apply** to see the finished image. If the object in the photo remains twisted, click **Calibrate** and repeat this step.

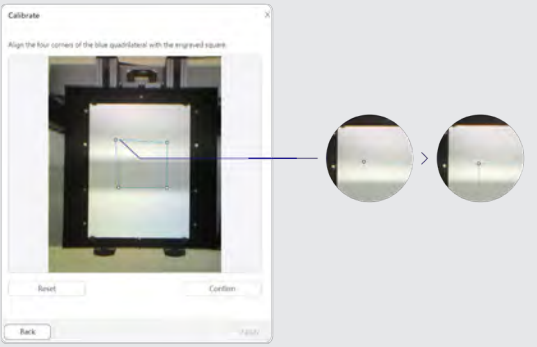

ⓑ After you obtain a normal-shaped image, click **Confirm**. The finished image will be loaded in the coordinate system.

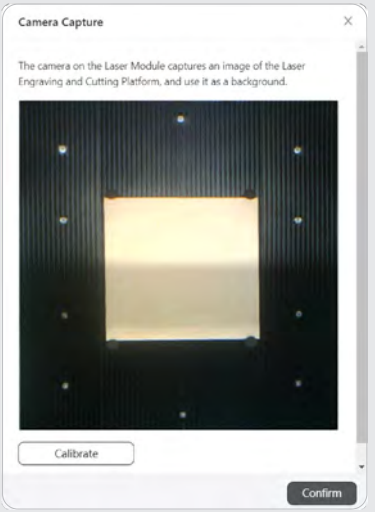

④ On the left toolbar, click 📂 to select an object file from your computer and add it to the canvas. Click to select the object, edit the object by using tools in the **Edit** panel, and click **Next**.

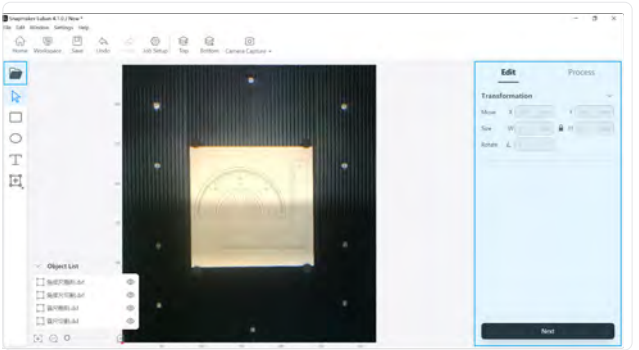

Currently, the Laser G-code Generator of Snapmaker Luban supports to process the following file formats: .svg, .png, .jpeg, .jpg, .bmp, .dxf, and .stl. If you add an .stl file, you can set the model size and material thickness. Then, Snapmaker Luban automatically transforms the .stl object into multiple layers of vector images.

⑤ Click to select the object, and click **Create Toolpath**. You can select the material you use and its processing method in the **Preset** list. Based on the selected Preset option, Snapmaker Luban will generate a set of recommended parameters. You can also configure work parameters on yourself. Then, click **Save** > **Generate G-code and Preview**.

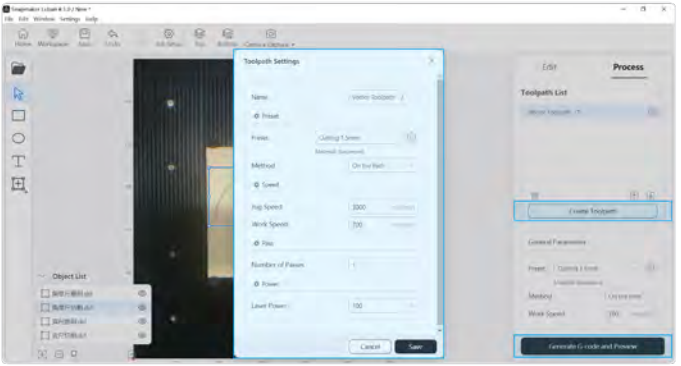

⑥ Click **Export** > **Load G-code to Workspace**. On the G-code Files window, click **Start on Luban**. On the pop-up Start Job window, select **Auto Mode**, and click **Start**. The machine will measure the material thickness, perform Auto Focus, and start laser engraving and cutting.

Before you click **Start**, ensure that all the operators and bystanders have correctly put on laser safety goggles, and the Enclosure is closed.

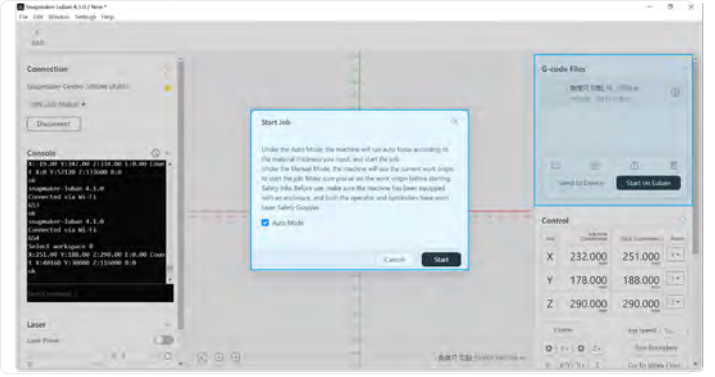

If one of the following conditions happens, thickness measurement may fail:

- The material thickness is over 50 mm.
- The material texture is transparent, or the material surface is glossy or specular.
- The material color is red or black.

If the thickness measurement fails, you can unselect **Auto Mode** on the Start Job window so that you can enter the Manual Mode. Manually input material thickness, and click **Start** to start laser engraving and cutting.

If the laser inside the 10W Laser Module is overheated to more than 55°C , the machine will launch overheat protection and pause the ongoing job. Wait until the temperature drops back to normal. Then, click **Resume** to continue laser engraving and cutting.

⑦ After the laser engraving and cutting job is complete, open the Enclosure and take out the finished work.

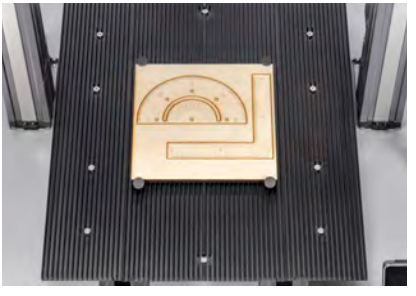

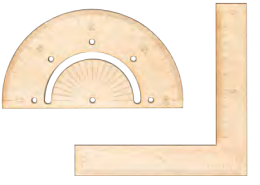

You can also start laser engraving and cutting on the Touchscreen. For more information, see the User Manual of the 10W Laser Module on https://support.snapmaker.com.

Share!

Share your finished work in our Facebook group and our forum.

Maintenance

Clean the Laser Lens Protector

Scenarios

After the 10W Laser Module has been used for a period of time, dust and grease may accumulate on the laser lens protector, which will significantly decrease the engraving and cutting capability of the laser. For this situation, you need to clean the laser lens protector to recover the engraving and cutting capability.

How to Clean the Laser Lens Protector

① Prepare the required clean tools: cotton swabs and ethyl alcohol.

② Turn off the machine, and disassemble the 10W Laser Module from the machine.

③ Dampen a cotton swab with ethyl alcohol, and then stick it into the air concentrator hood of the 10W Laser Module. Wipe the surface of the laser lens protector from center to margin clockwise.

The cotton swab is a single-use tool. If there is dust or grease remaining on the laser lens protector after you wipe it once, take a new cotton swab and repeat step ③ to wipe the laser lens protector again.

④ The clean work is done till no dust, grease, or water is on the surface of the laser lens protector.

Resources

This guide is subject to change. The latest version is on our Support website: select **Snapmaker 2.0** > go to **Quick Start Guide**.
https://support.snapmaker.com/hc/en-us

Besides this guide, a User Manual is available on our Support website: select **Snapmaker 2.0** > go to **User Manual**.
https://support.snapmaker.com/hc/en-us

We are here for you whenever you need general information or technical support:
support@snapmaker.com.

For any sales inquiries:
sales@snapmaker.com.

For product purchases:
https://shop.snapmaker.com.

Share anything you want with other Snapmaker users in our forum:
https://forum.snapmaker.com.

Share anything you want via the following channels:

“Darkness cannot drive out darkness: only light can do that. Hate cannot drive out hate: only love can do that.”
— Martin Luther King Jr.

Original Instruction
Y.3.B.A.0069-01 V1.0.0