snapmaker | A350

QUICK START GUIDE

Wonderful

$\int_0$ make(x)dx = snapmaker

Original Instruction

Y.3.B.A.0008-01 V1.2.0

MAKE SOMETHING WONDERFUL

Make Something Wonderful

Three years ago, when we were designing the Snapmaker Original, we broke the rules of traditional desktop 3D printers and created the first modular 3-in-1 3D printer on the market. At first, The Verge and a lot of other reviewers doubted that “Snapmaker is an upcoming Kickstarter project with a lofty goal: to be the holy trinity for at-home makers by using detachable modules to convert between a 3D printer, a CNC carver, and a laser engraver,” and “At the price that Snapmaker is selling, it’s possible the whole thing is too good to be true.” We knew people had a lot of uncertainty about our project and were hesitant to back us because of the complexity of designing and making such a product. Despite all the doubts, we worked hard on pushing the boundaries of possibility, and we eventually made the impossible possible. Not only did we fulfill all the rewards, but we also sold over 10,000 units all over the world in 2018. And in 2019, we launched the Snapmaker 2.0. We went beyond our limits once again. Our goal is to build a system behind our modular 3D printers and give you the best maker tools that can work for all your projects. As creatives we all desire to make something wonderful and creativity makes us feel alive. The Snapmaker 2.0 will help you turn your idea into reality. This quick start guide will guide you through your maker journey and take you from building your own 3D Printer/Laser Cutter/CNC Carver to making your first creations utilizing all these tools. Congratulations on becoming part of the Snapmaker community! Thousands of people like you are using the Snapmaker to explore, make, and share in the world of making. We are strong believers that wonderful things will happen when creative minds meet the ideal tools. Have fun making and see you out there!

Team Snapmaker

Welcome to the world of making

Happy Making

This machine is built for innovators. Our goal is to assist you to make the world a better place with a machine we built with love. The difference could be something as small as a Christmas gift, or something as ambitious as exploring unknown territories of our mankind. Dream big and make it happen.

Modular System

Snapmaker is not only a 3D printer, but also a powerful machine that you can modify with all kinds of addons. You can equip your Snapmaker with an enclosure to protect you and your family from laser and dirt particles. New addons are coming soon with more exciting features. Please stay tuned.

CONTENTS

01 Before You Start

12 Machine Assembly

38 3D Printing

56 Laser Engraving and Cutting

72 CNC Carving

Copyright © 2020 Snapmaker. All rights reserved.
This language version of the manual is verified by the manufacturer (Original Instruction). No part of this publication, including pictures may be reproduced and / or made public, whether by printing, photocopying, microfilm or by any other means whatsoever, without the prior written permission of Snapmaker.

1.1 Disclaimer

Please read and understand the contents of the manual of this product carefully. Failure to read the manual may lead to personal injury, inferior results or damage to the Snapmaker products. Always make sure that anyone who uses this product knows and understands the contents of this manual to make the most out of it. This manual is provided for reference purposes only, we do not warrant the accuracy or completeness of the information provided by this manual. We reserve the right to modify or revise this manual in our sole discretion at any time without notice, users can download the most up-to-date version of this manual on our official website.

When making objects using Snapmaker products, users remain responsible to ensure that they do not infringe any third party intellectual property rights or violate any applicable laws or regulations. The conditions or methods used for assembling, handling, storage, use, maintaining or disposal of this product are beyond our control. For this reason, we do not assume responsibility and expressly disclaim liability for loss, injuries, damage, or expense arising out of or in any way connected with the assembly, handling, storage, use, maintaining or disposal of this product.

1.2 Intended Use

Snapmaker modular 3D printers come with improved 3-in-1 capabilities for 3D printing, laser engraving / cutting, and CNC carving. Snapmaker modular 3D printers are ideal choice for making large objects or accurate parts with outstanding print / engrave / cut / carve quality. Snapmaker modular 3D printers are intended for use under the guidelines provided in the product manual. When making objects using Snapmaker modular 3D printers, users remain responsible to qualify and validate the application of the created object for its intended use, especially critical for applications in strictly regulated areas like medical devices and aeronautics.

1.3 Safety and Compliance

General Safety Information

- This machine is only intended for use by a skilled person.
- Always operate this machine indoors on a solid horizontal table or workbench.
- Do not expose this machine to rain or wet conditions.
- Keep children and bystanders away while operating this machine.
- Stay alert, watch what you are doing and use common sense when operating this machine. Do not use this machine while you are tired or under the influence of drugs, alcohol or medication.
- Do not reach inside the machine or touch the moving parts while the machine is still in operation. An injury may be caused by its moving parts.
- Do not leave the machine unattended while it is still on.

In all EU member states, operation of 5150-5250 MHz is restricted to indoor use only.

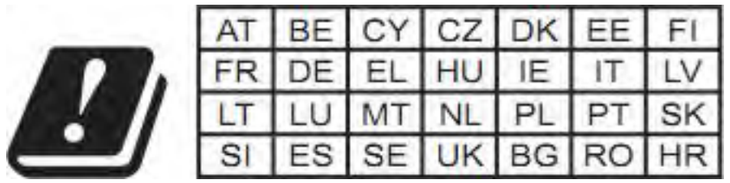

Stop using this product if any of the following occurs. Turn off the machine immediately.

- There is a fire in this machine which persists after the machine turns off.
- The machine stops unexpectedly.
- You see any damage to the interior components of this machine.
- You notice unusual light or an unusual sound coming from this machine that was not occurring previously.

3D Printing Safety

- Do not touch the nozzle, print sheet and heated bed when the machine is printing or heating.
- Always unplug the machine before performing maintenance or modifications.
- Set up the printer in a well-ventilated place when printing with ABS. The melting of some materials may release toxic fumes.

Laser Safety

- The laser tool is a class 4 laser. You are only allowed to operate the laser tool if you have a sufficient specialized and safety knowledge: You must know the physical properties as well as the biological effects of laser radiation, the legal bases and rules of technology, the laser classes and their dangers, the implementation of safety measures.
- Operate the machine with an enclosure covered and wear the Laser Safety Goggles.
- Never expose yourself to the laser beam. Proper use and care of the laser tool are essential to safe operation.
- Operate the laser tool when it is exhausted to the outdoors or through an air filter. The melting of some materials may release toxic fumes.
- Always unplug the machine before performing maintenance or modifications.
- Remove any reflective material from the work area underneath the laser module. Reflective material can cause uncontrolled scattered radiation.

CNC Safety

- Age Recommendation: For experienced users and users age 18 and above.
- Put the machine into an enclosure and wear the CNC Safety Goggles.
- Always have the material securely clamped. Never attempt to hold the workpiece with your hands throughout the CNC carving process.
- Always unplug the machine before performing maintenance or modifications.
- If the bit or workpiece become jammed or bogged down, turn off the machine immediately. Wait for all moving parts to stop and unplug the tool, then work to free the jammed material.
- Do not touch the bit or collet after use. After usage, the bit and collet are too hot to be touched with bare hands.
- Some dust created by CNC carving and cutting contains chemicals known to cause cancer or other reproductive harm. To reduce your exposure to these chemicals: work in a well-ventilated area and work with safety equipment, such as those dust masks that are specially designed to filter out microscopic particles.

FCC Compliance

This equipment has been tested and found to comply with the limits for a Class B digital device, pursuant to part 15 of the FCC Rules. These limits are designed to provide reasonable protection against harmful interference in a residential installation. This equipment generates, uses and can radiate radio frequency energy and, if not installed and used in accordance with the instructions, may cause harmful interference to radio communications. However, there is no guarantee that interference will not occur in a particular installation. If this equipment does cause harmful interference to radio or television reception, which can be determined by turning the equipment off and on, the user is encouraged to try to correct the interference by one or more of the following measures:

- Reorient or relocate the receiving antenna.
- Increase the separation between the equipment and receiver.
- Connect the equipment into an outlet on a circuit different from that to which the receiver is connected.
- Consult the dealer or an experienced radio / TV technician for help.

Caution: Any changes or modifications to this device not explicitly approved by manufacturer could void your authority to operate this equipment.

This device complies with part 15 of the FCC Rules. Operation is subject to the following two conditions: (1) This device may not cause harmful interference, and (2) this device must accept any interference received, including interference that may cause undesired operation.

1600mW Laser Cutting Module:

This equipment complies with FCC radiation exposure limits set forth for an uncontrolled environment.

Touchscreen:

The device has been tested and comply with FCC SAR limits.

ISEDC Compliance

Operation of 5150-5250 MHz is restricted to indoor use only.

This device complies with Innovation, Science and Economic Development Canada License exempt RSS standard(s). Operation is subject to the following two conditions:

(1) this device may not cause harmful interference, and (2) this device must accept any interference received, including inter ference that may cause undesired operation of the device.

Le fonctionnement de 5150-5250 MHz est limité à une utilisation en intérieur uniquement.

Le présent appareil est conforme aux CNR d' Innovation, Sciences et Développement économique Canada applicables aux appareils radio exempts de licence. L'exploitation est autorisée aux deux conditions suivantes : (1) l'appareil nedoit pas produire de brouillage, et(2) l'utilisateur de l'appareil doit accepter tout brouillage radioélectrique subi, même si le brouillage est susceptible d'en compromettre le fonctionnement.

1600mW Laser Cutting Module:

The device is compliance with RF exposure guidelines, users can obtain Canadian information on RF exposure nd compliance.

Le présent appareil est conforme Après examen de ce matériel aux conformité ou aux limites d’intensité de champ RF, les utilisateurs peuvent sur l’exposition aux radiofréquences et compliance d’acquérir les informations correspondantes.

Touchscreen:

The device has been tested and comply with ISEDC SAR limits.

L'appareil a été testé et est conforme aux restrictions ISEDC SAR.

Manufacturer

Shenzhen Snapmaker Technologies Co., Ltd.

5F, Building 13, Pingshan 1st Road, Nanshan District, Shenzhen, Guangdong, China

1.4 Labels on Your Snapmaker

Safety Labels	Hazard	Warning	Location
	Hot surface	Taking care to avoid contacting with a hot surface.	On the 3D Printing Module, Print Sheet and Heated Bed
	Sharp elements	Taking care to avoid injury from sharp elements (e.g. CNC bits).	On the CNC module
IEC 60825 FDA	Laser radiation	Class 4 laser product. Avoid eyes or skin exposure to direct or scattered radiation.	On the Laser Module
IEC 60825 FDA	Laser aperture	Laser radiation is emitted from this aperture.	On the Laser Module

1.5 Specifications

General	
Frame Material	Aluminum Alloys
Connectivity	Wi-Fi, USB Cable, USB Disk
Touchscreen	5”TFT, Android System
Software	Snapmaker Luban. You can also use 3rd party software to generate G-code fles
Supported File Types	STL, OBJ, SVG, JPEG, PNG, more formats to be added
Supported OS	MacOS, Windows, Linux
Rated Power	320W
3D Printing	
Build Volume	A150: 160 x 160 x 145 mm A250: 230 x 250 x 235 mm A350: 320 x 350 x 330 mm
Heated Bed	A150: Up to 110°C A250: Up to 100°C A350: Up to 80°C
Layer Resolution	50 - 300 microns
Nozzle Temperature	Up to 275°C
Nozzle Diameter	0.4 mm
Supported Materials	PLA, ABS, TPU, Wooded PLA, etc.
Laser	
Work Area	A150: 160 x 160 mm A250: 230 x 250 mm A350: 320 x 350 mm
Laser	1 600mW 450nm Laser Diode
Wavelength	450 nm
Safety Class	Class 4
Supported Materials	Wood, leather, plastic, fabric, paper, nontransparent acrylic, etc.
CNC	
Work Area	A150: 160 x 160 x 90 mm A250: 230 x 250 x 180 mm A350: 320 x 350 x 275 mm
Shank Diameter	0.5 mm - 6.35 mm (0.02 - 0.25 inches)
Spindle Speed	6000 - 12,000 RPM
Supported Materials	Wood, acrylic, PCB, carbon fiber sheet, jade, etc.

Notice: The specifications listed might be slightly changed in any meaningful way when we refine this product.

1.6 Parts List

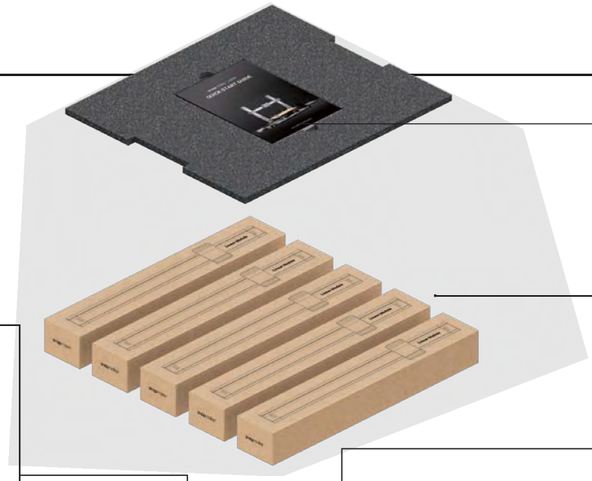

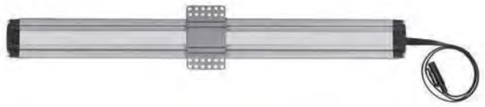

Linear Module x 5

Quick Start Guide x 1

3D Printing Module x 1

Laser Module x 1

CNC Module x 1

Filament x 1

Touchscreen x 1

Touchscreen Holder x 1

Controller x 1

Toolhead Cable x 1

Y Conversion Cable x 1

Z Conversion Cable x 1

Power Module x 1

Laser Safety Goggles x 1

Fixture Accessory x 4

CNC Safety Goggles x 1

Arched Fixture x 4

Filament Holder Sheet x 1

Tool Box x 1

Filament Holder Tube x 1

AC Power Cable x 1

DC Power Cable x 1

USB Cable x 1

Base Plate x 1

Converter x 2

Z-Axis Holder x 2

CNC Carving Platform x 1

Heated Bed x 1

Print Sheet x 1

Laser Engraving/Cutting Platform x 1

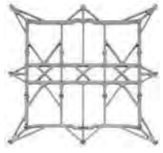

Platform x 1

Material Bag x 1

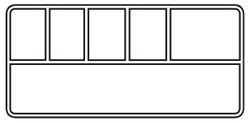

Tool Box

M4 x 30 Screw x 12

M4 x 10 Hex Socket Head Screw x 17

M4 x 8 Screw x 68

M4 x 10 Hex Flat Head Screw x 22

M4 x 70 Screw x 4

Wing Nut x 4

Foot x 4 + M4 x 10 Hex Socket Head Screw x 4

ER11 Collet (Only for 3.175 mm CNC Bits) x 1 + ER11 Nut x 1

Divider x 6

Cable Holder x 1

Steel Strip Adjustor (For Maintenance) x 1

Hot End Kit x 1

Tweezer x 1

Flat End Mill x 1

Ball End Mill x 1

Cable Tie x 1

Silicone Plug x 8

USB Disk x 1

17mm Open-End Wrench x 1

Diagonal Pliers x 1

Palette Knife x 1

14mm Open-End Wrench x 1

Screwdriver x 1

Material Bag

CNC Material x 1

Laser Material x 2

Wiping Cloth x 1

Calibration Card x 2

1.7 Video Tutorials

We provide both the video tutorials and Quick Start Guide which help you get started. You can either read this Quick Start Guide to finish assembly and begin your maker journey, or watch the video tutorials at https://snapmaker.com

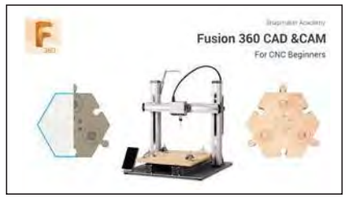

1.8 Used Symbols

	CAUTION	Ignoring this type of message might result in malfunction or damage of the machine and injuries to users.
	NOTICE	Details you should be aware of throughout the process.
	TIPS	Tips offer you convenient operations and additional options.
		Make sure that the highlighted part is facing the right way.
		Do not tighten the screws when this symbol appears. Always tighten the screws when it is absent.

1.9 Get the Screwdriver Ready

The screwdriver head H 2.5 is used for assembling the machine. The other heads are used for maintenance. Make sure the screw head holder has been put back inside of the handle before use.

MACHINE ASSEMBLY

01/22

Attach the feet to the Base Plate.

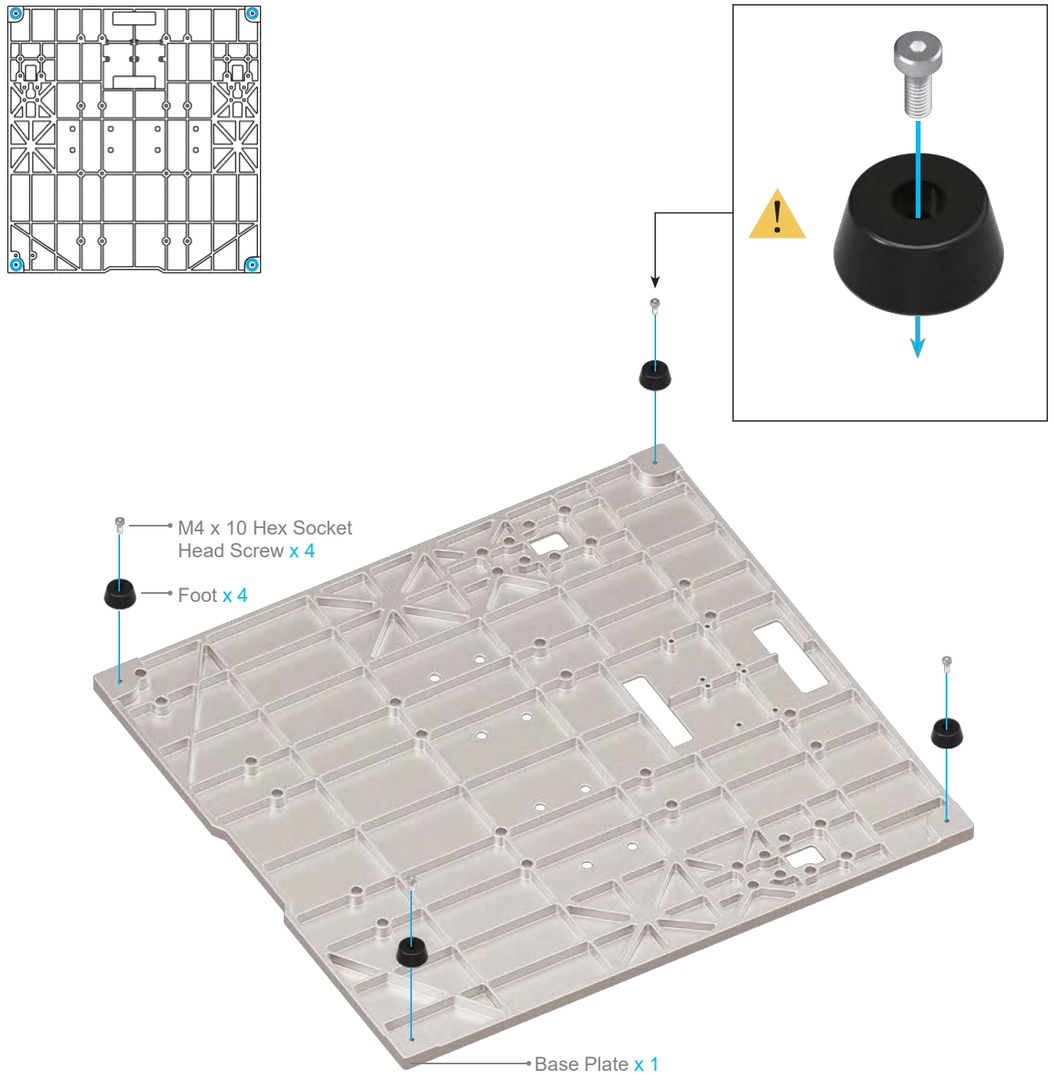

02/22

Make sure the sliders are aligning with each other. If not, you can move them to the same position as illustrated.

Please hold the linear modules carefully to prevent them from falling.

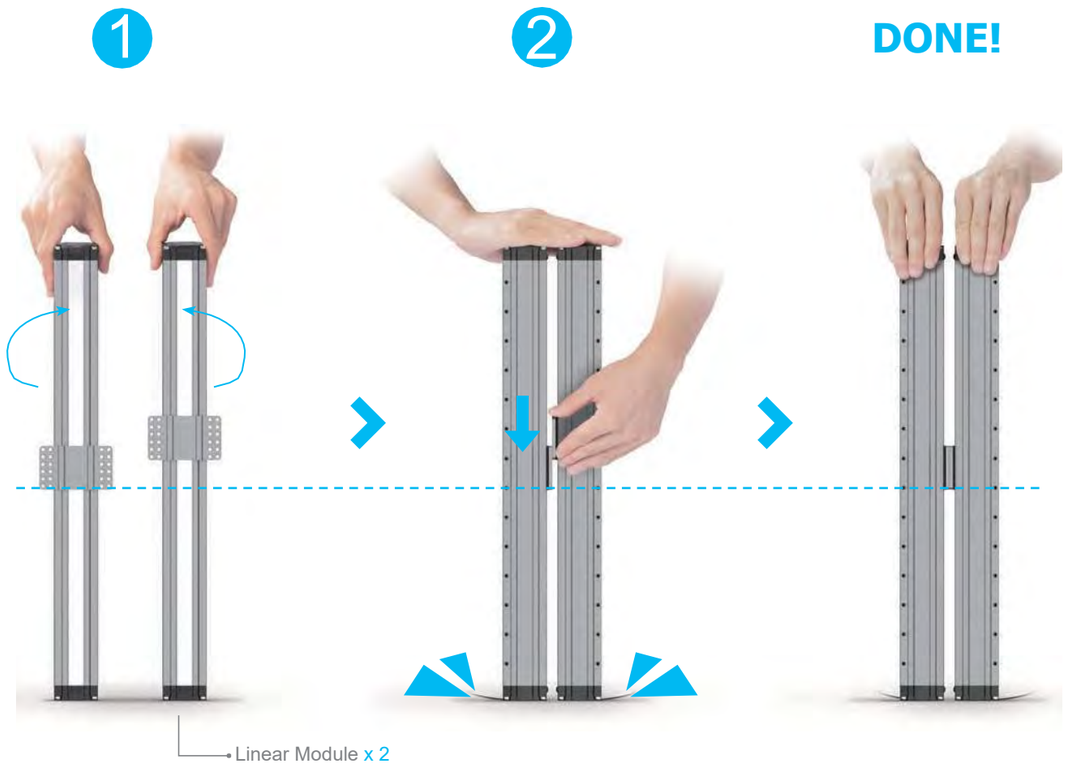

Do not press the steel strip.

03/22

Attach the Platform to the Y axes. Do not tighten the screws until Step 5.

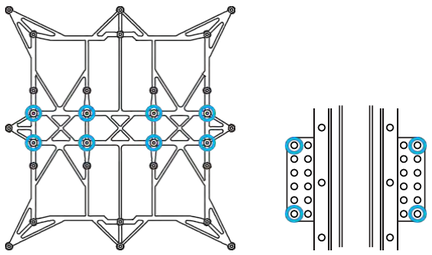

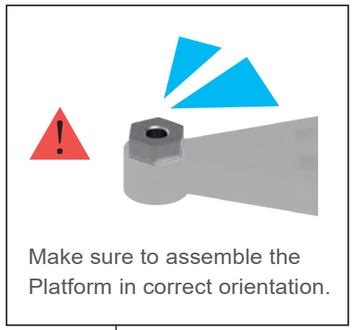

Make sure to assemble the Platform in correct orientation.

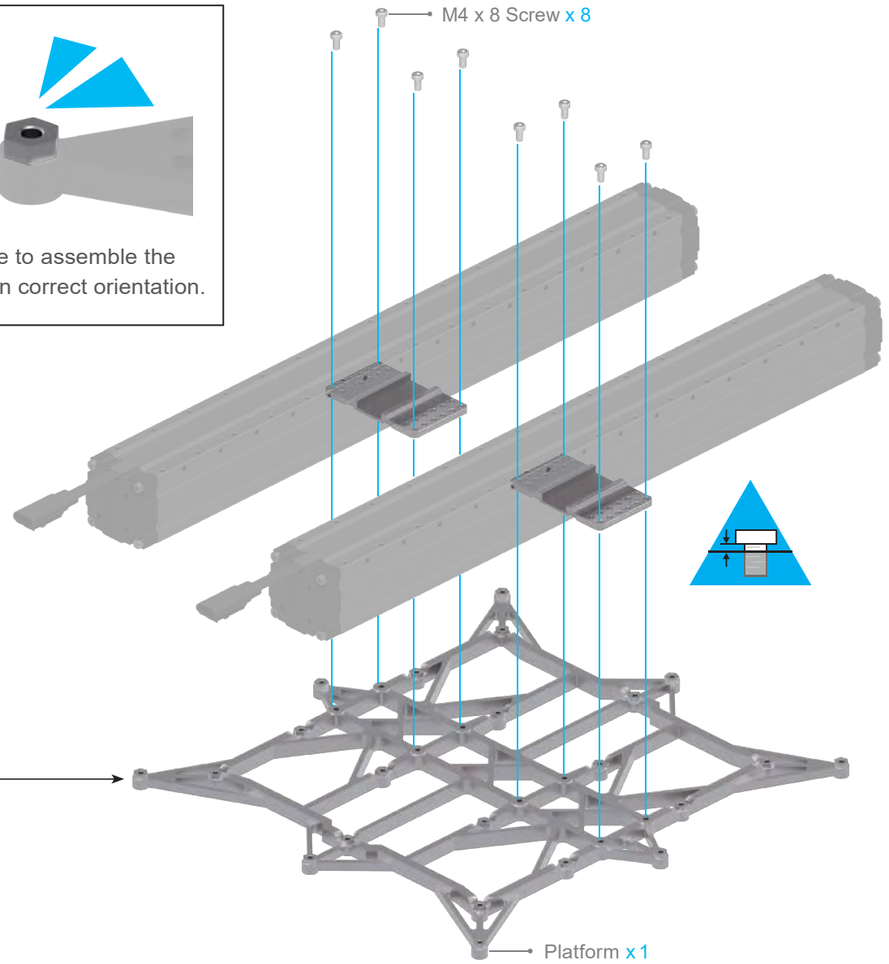

04/22

Attach the Y axes to the Base Plate.

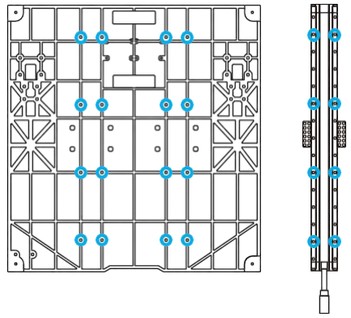

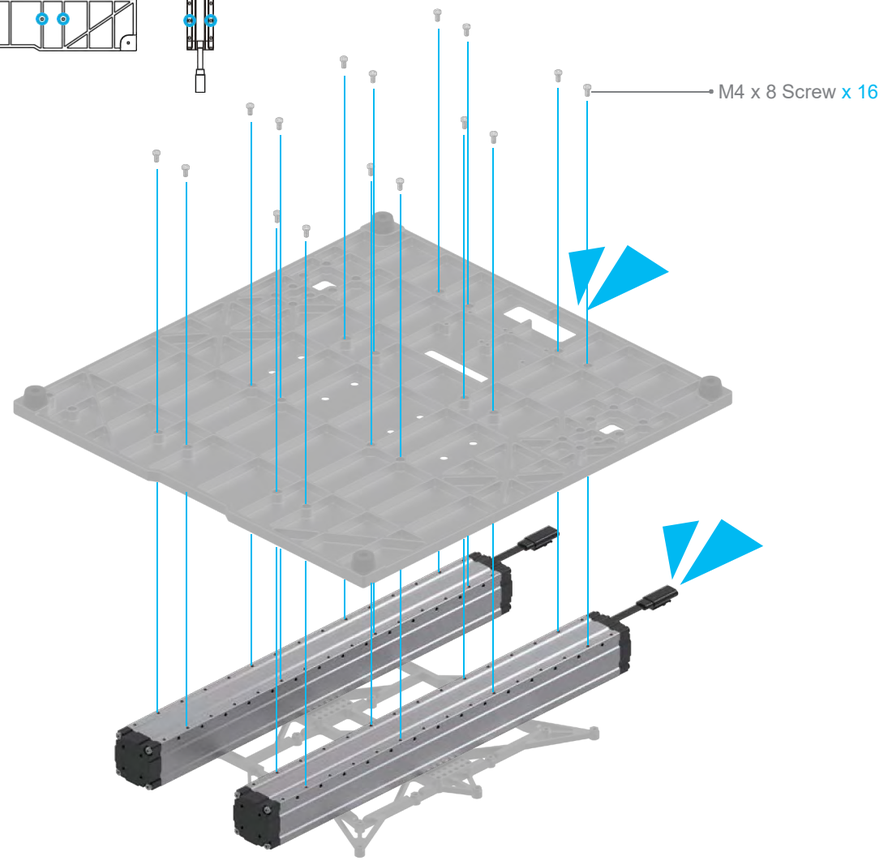

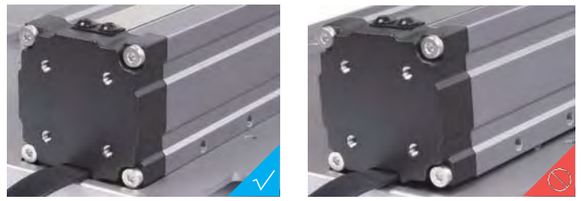

Make sure the Y-Axis Linear Modules are accurately mounted onto the grooves of the Base Plate.

05/22

Tighten the screws on the Y-axis sliders.

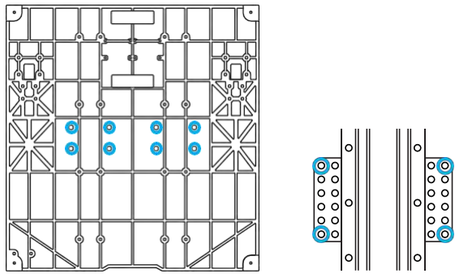

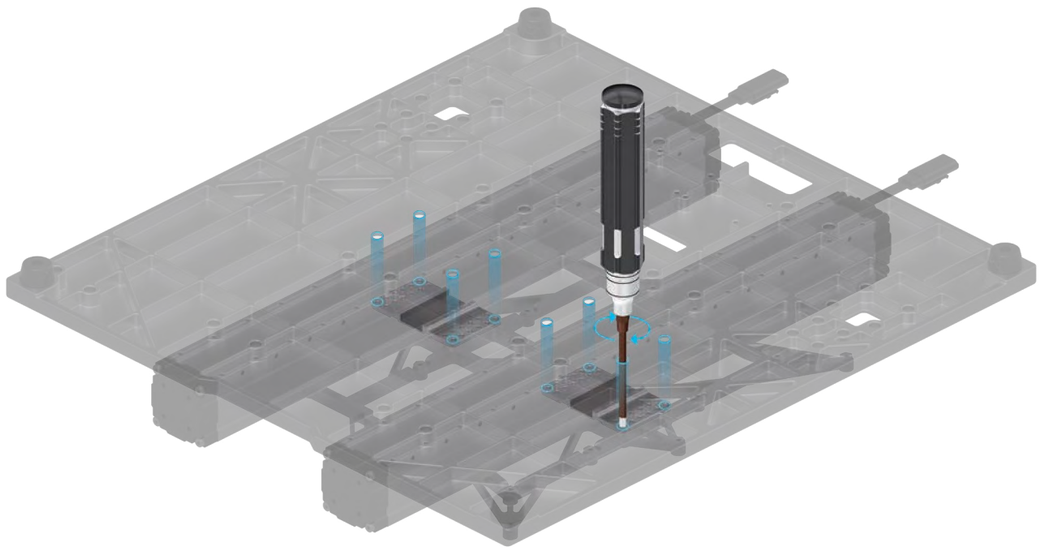

If the screws on the sliders are not aligning with the screw holes on the Base Plate, please move the Platform to the proper position.

06/22

Attach the Z-Axis Holders to the Base Plate.

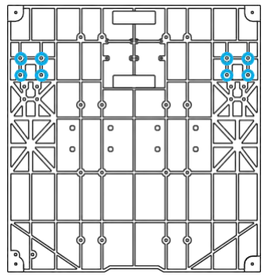

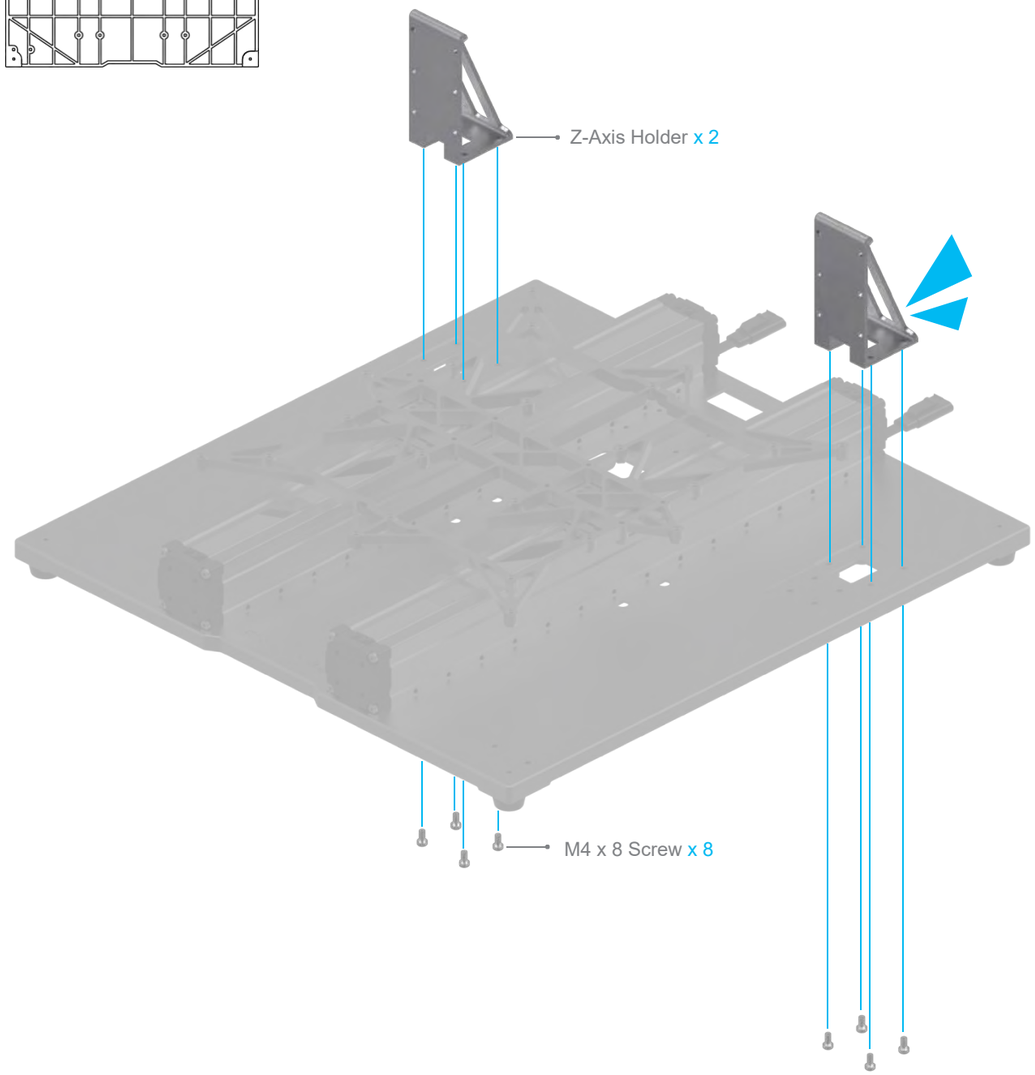

07/22

Attach the Touchscreen Holder to the Base Plate.

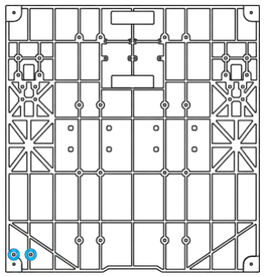

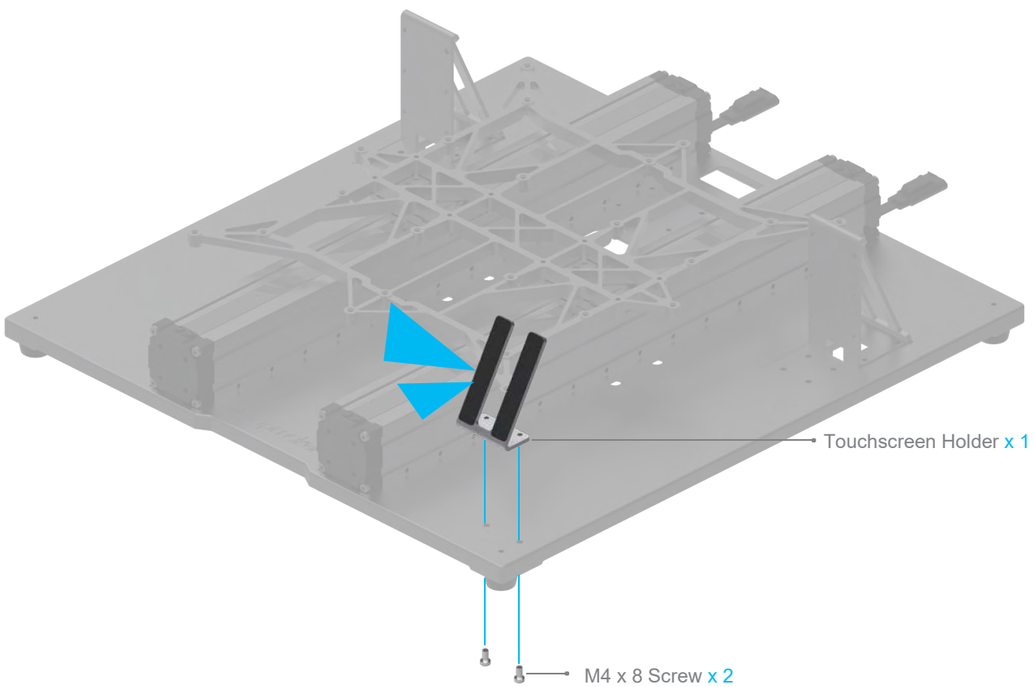

08/22

Thread the connecting cables through the holes of the holders, then attach the Z axes to the Z-Axis Holders. Do not tighten the screws until Step 12.

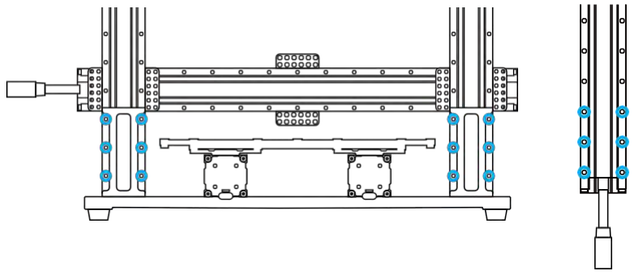

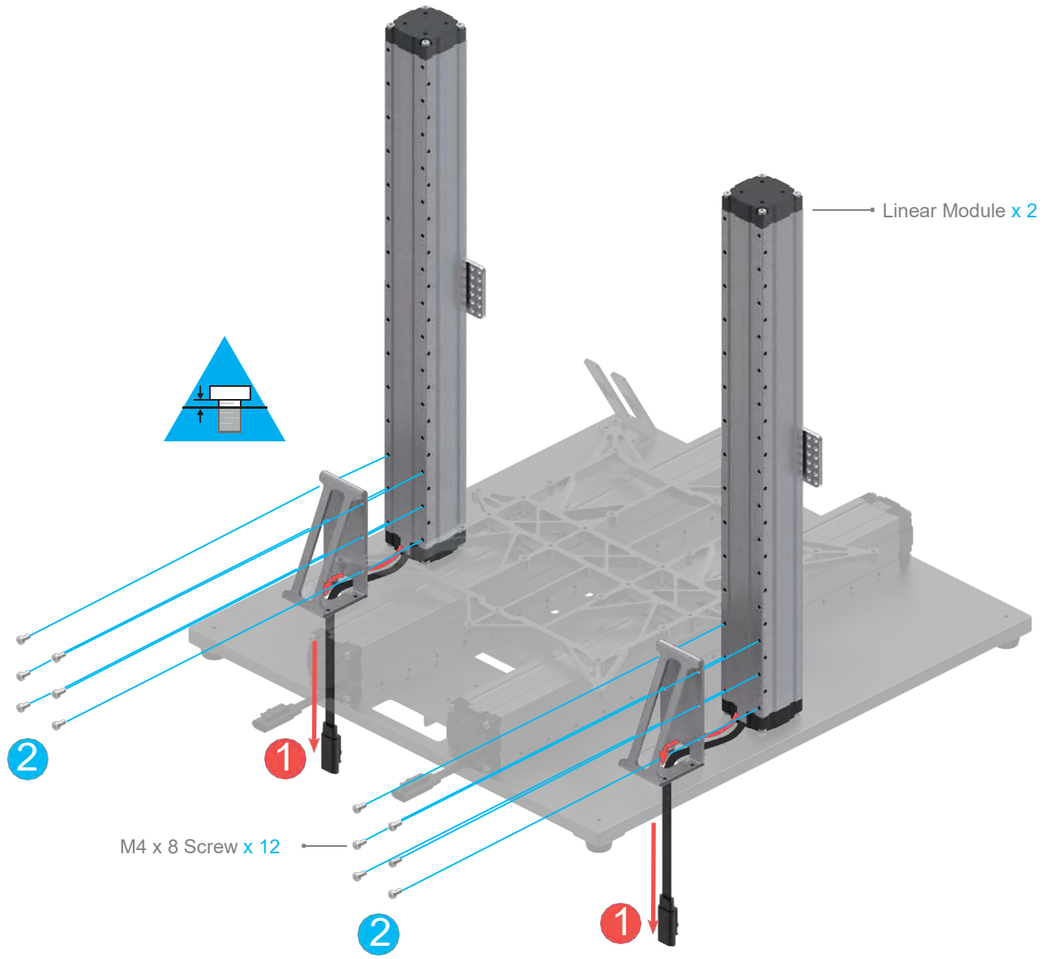

09/22

Install the screws to the bottom of the Z axes. Do not tighten the screws until Step 13.

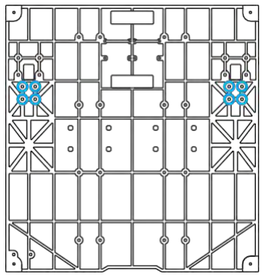

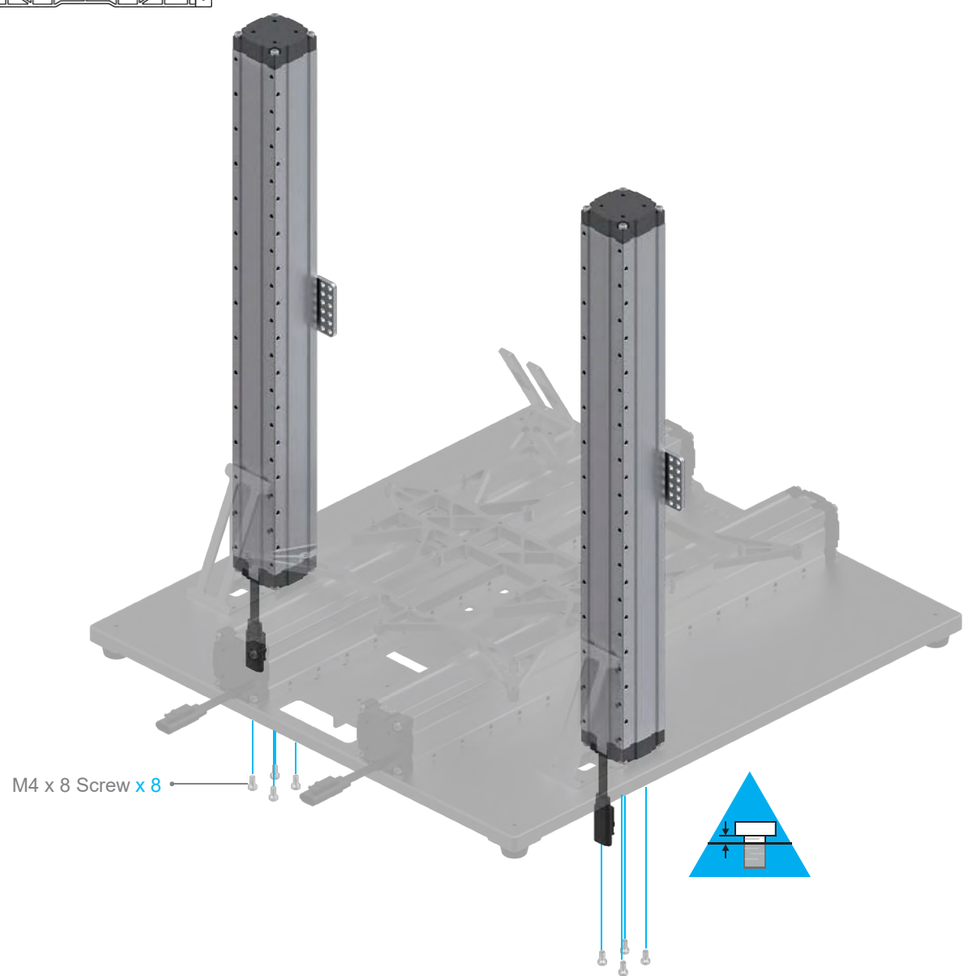

10/22

In the midline direction, manually move the Platform to the position as illustrated. Then move the Z-axis sliders to the lowest position that they can reach.

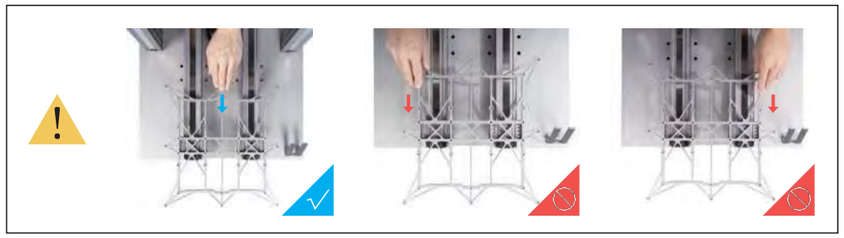

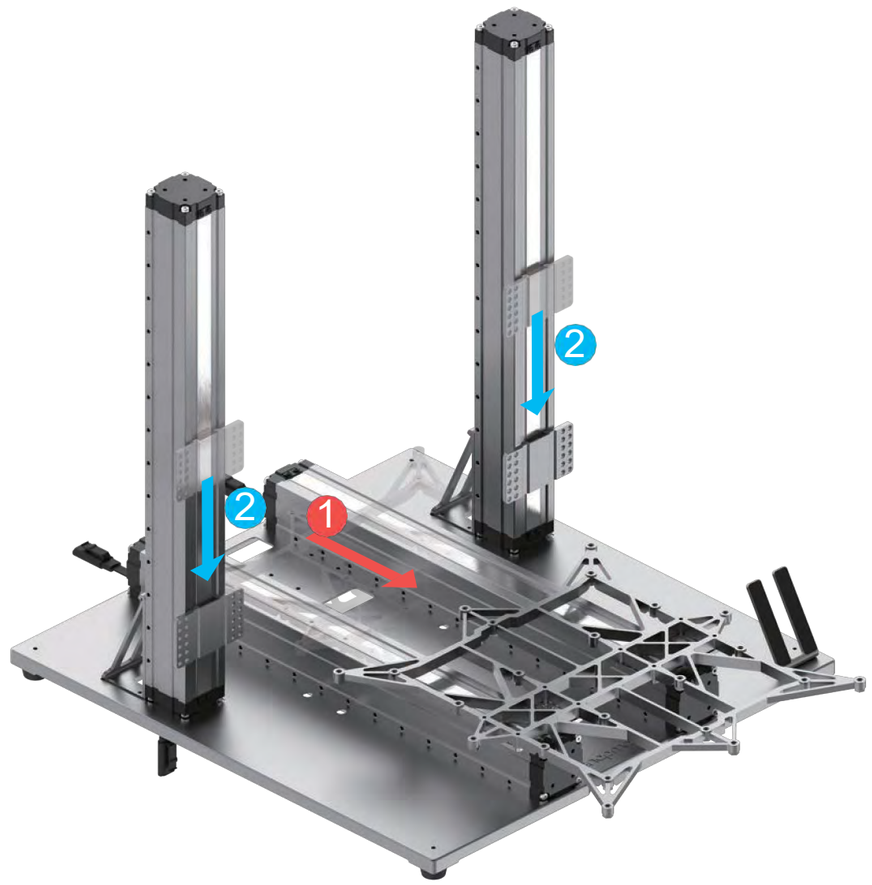

11/22

Attach the X axis to the sliders on the Z axes.

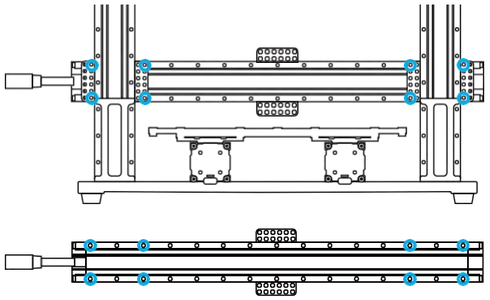

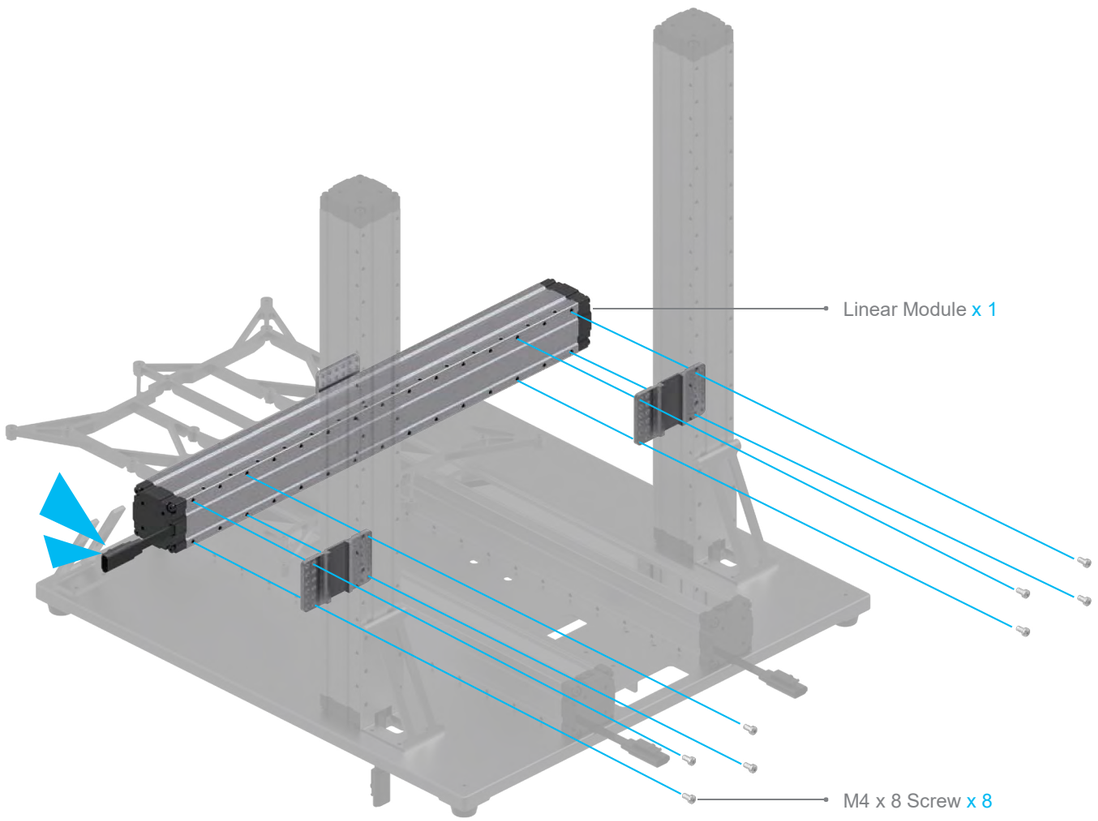

12/22

Tighten the screws that are used to attach the Z axes to the Z-Axis Holders.

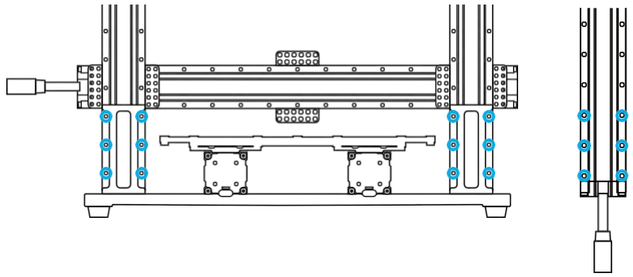

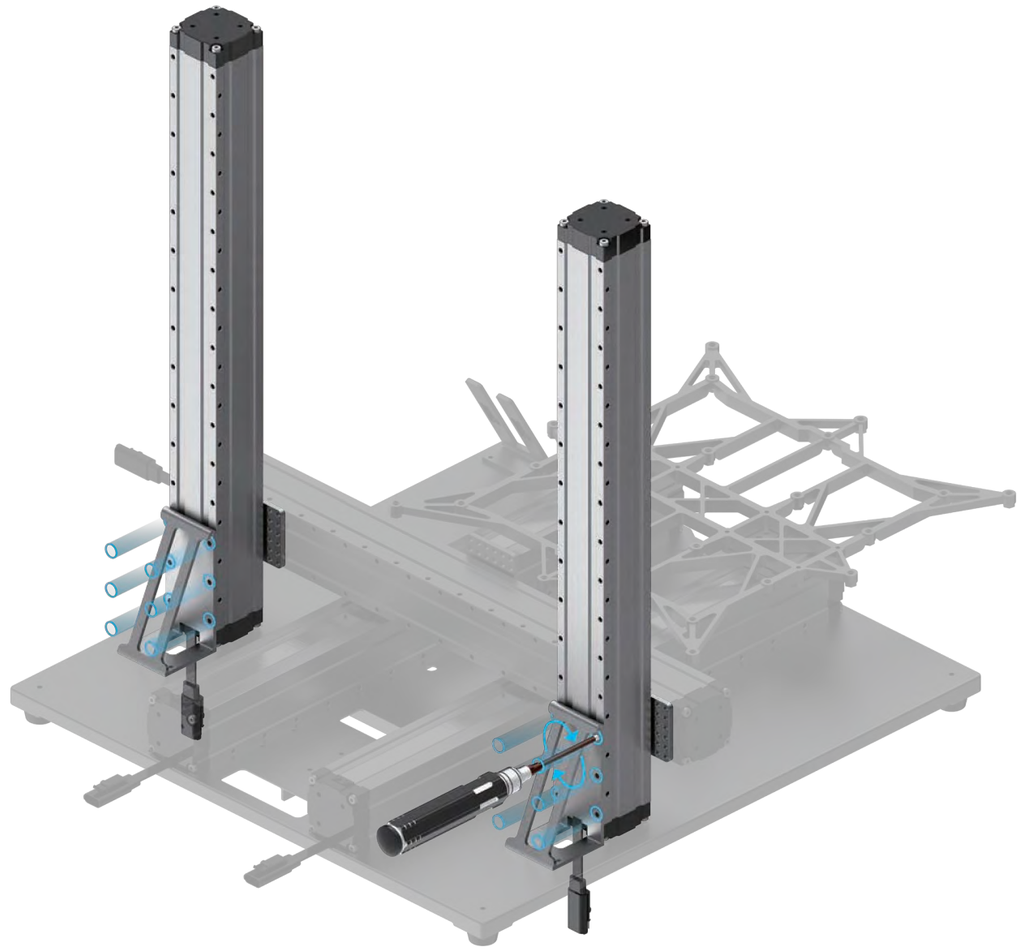

13/22

Tighten the screws to the bottom of the Z axes.

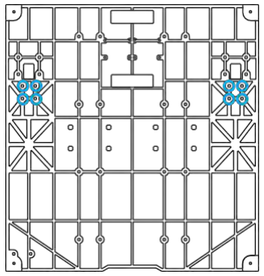

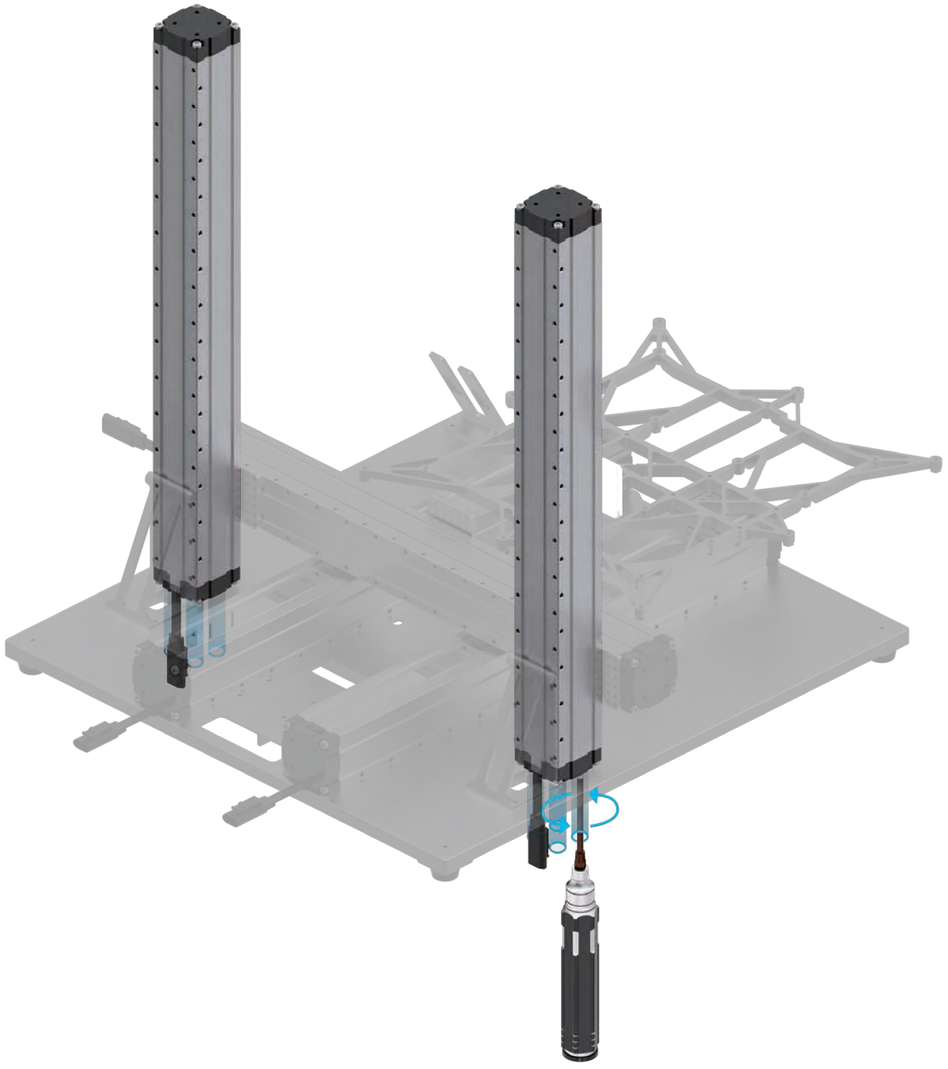

14/22

Put your hands at each end of the linear module, then move the X axis to the top.

> ⚠ Make sure both ends of the linear module are in horizontal alignment with each other throughout the process.

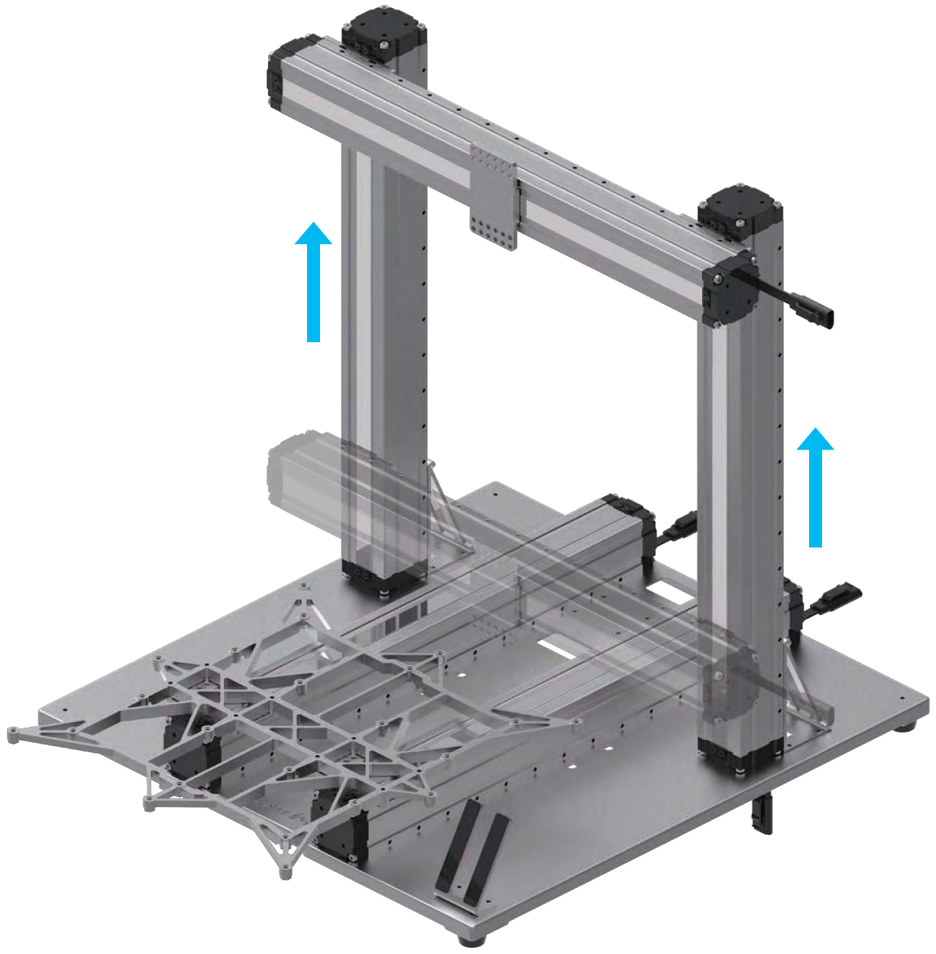

15/22

Locate the Y Conversion Cable and the Y-axis connecting cables as illustrated, then connect them to the Converter.

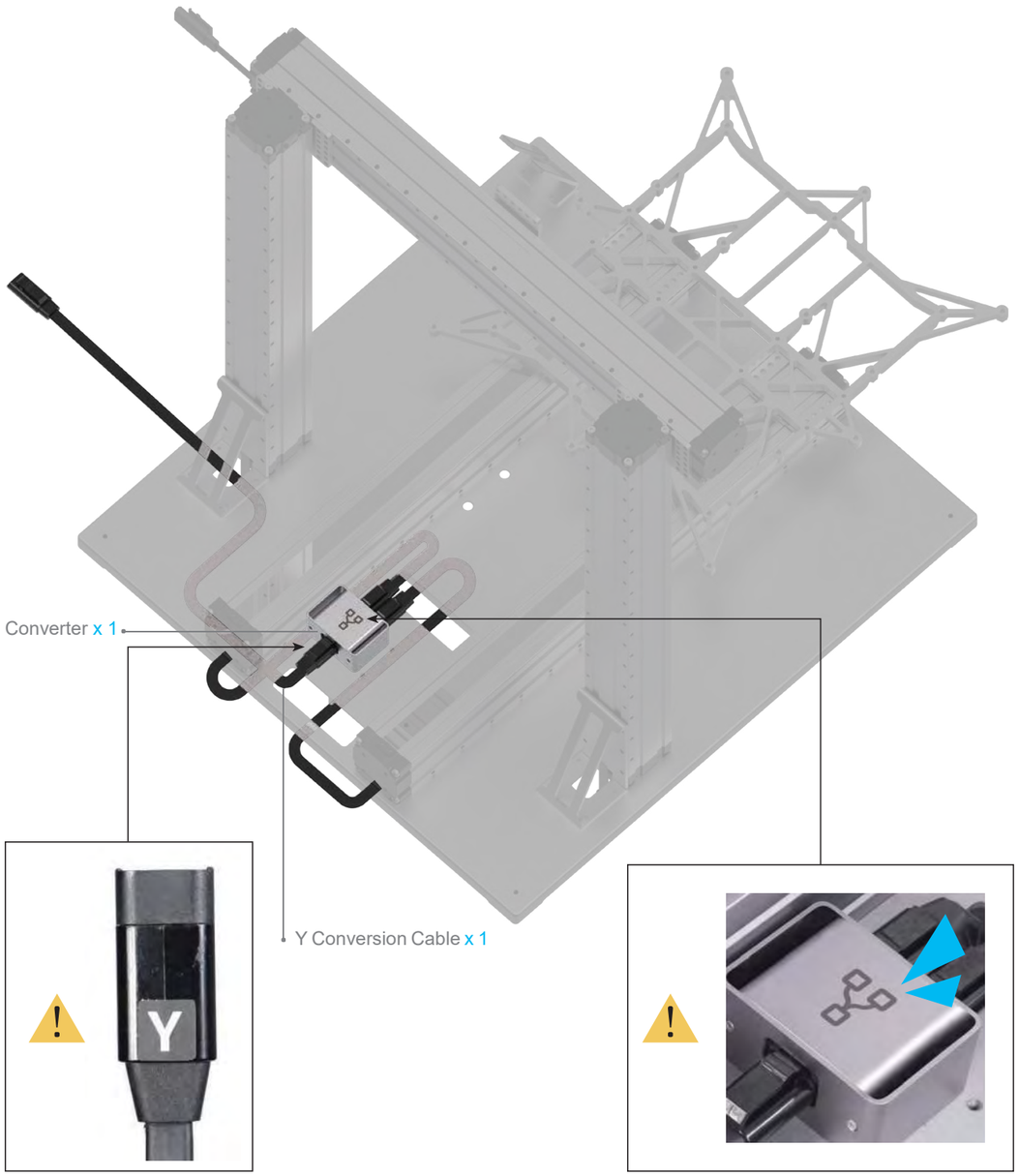

16/22

Attach the Y-axis converter to the Base Plate.

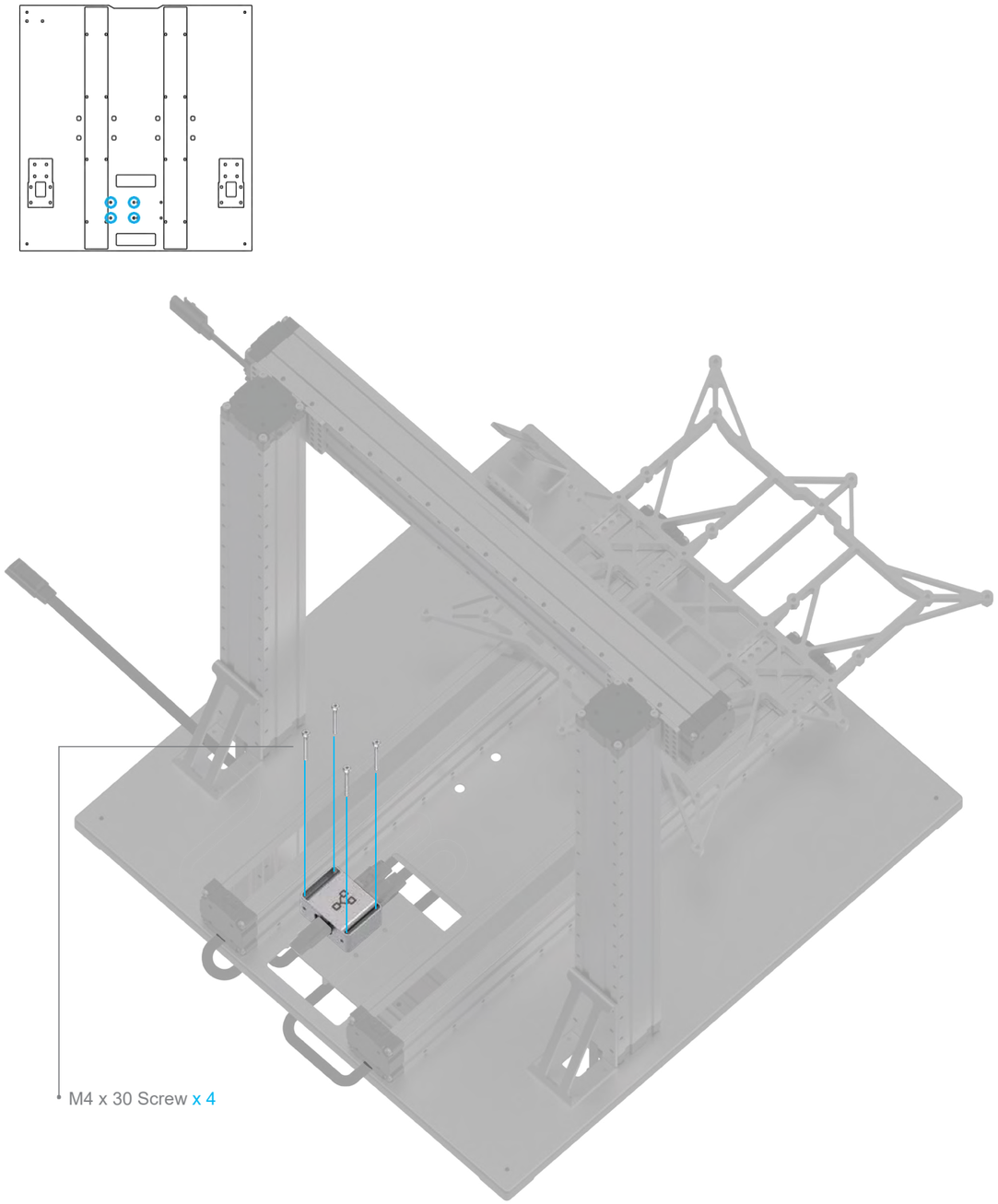

17/22

Locate the Z Conversion Cable and the Z-axis connecting cables as illustrated, then connect them to the Converter.

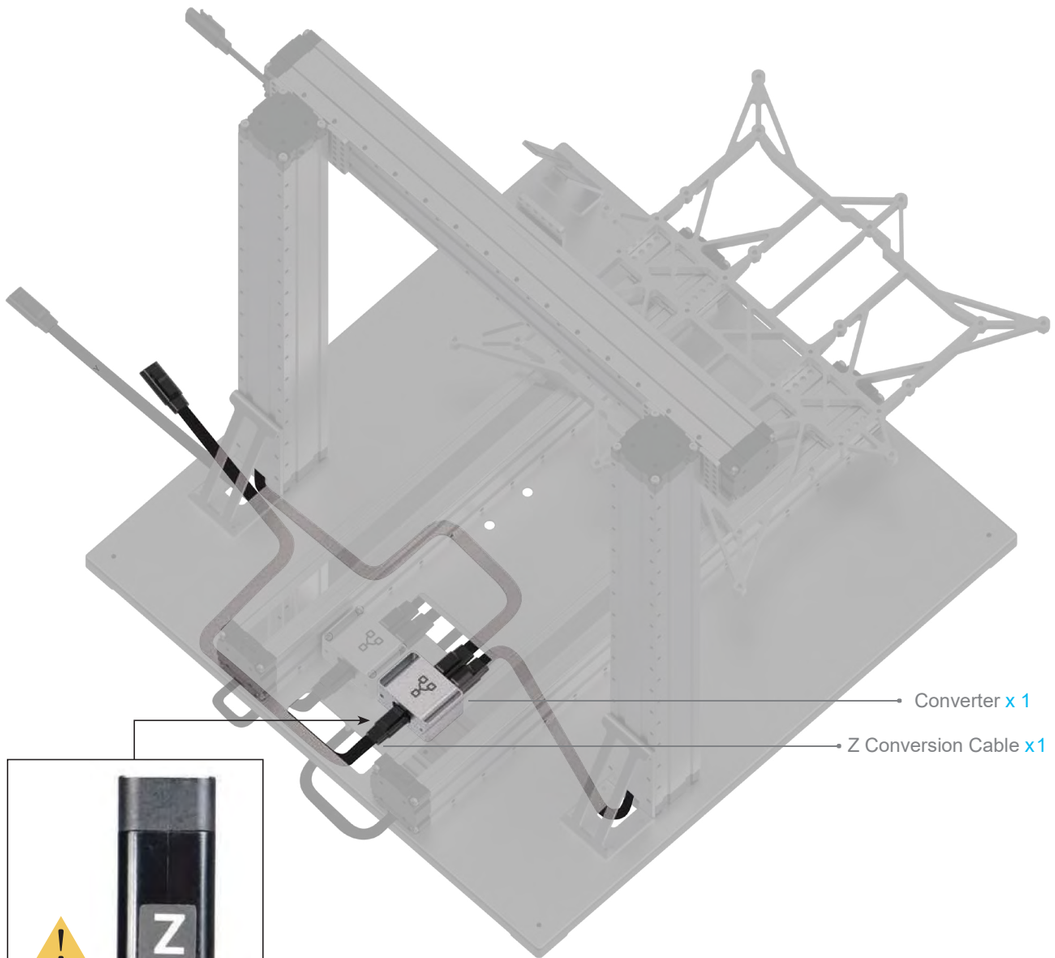

18/22

Attach the Z-axis converter to the Base Plate.

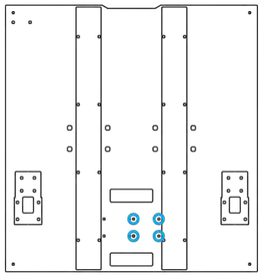

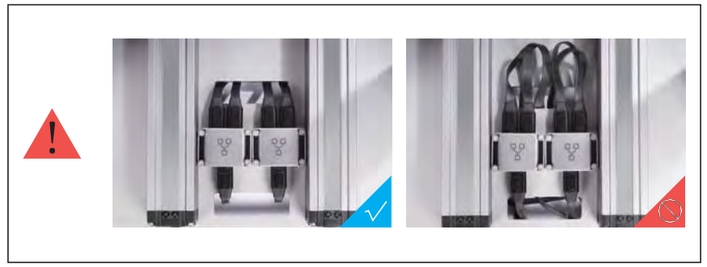

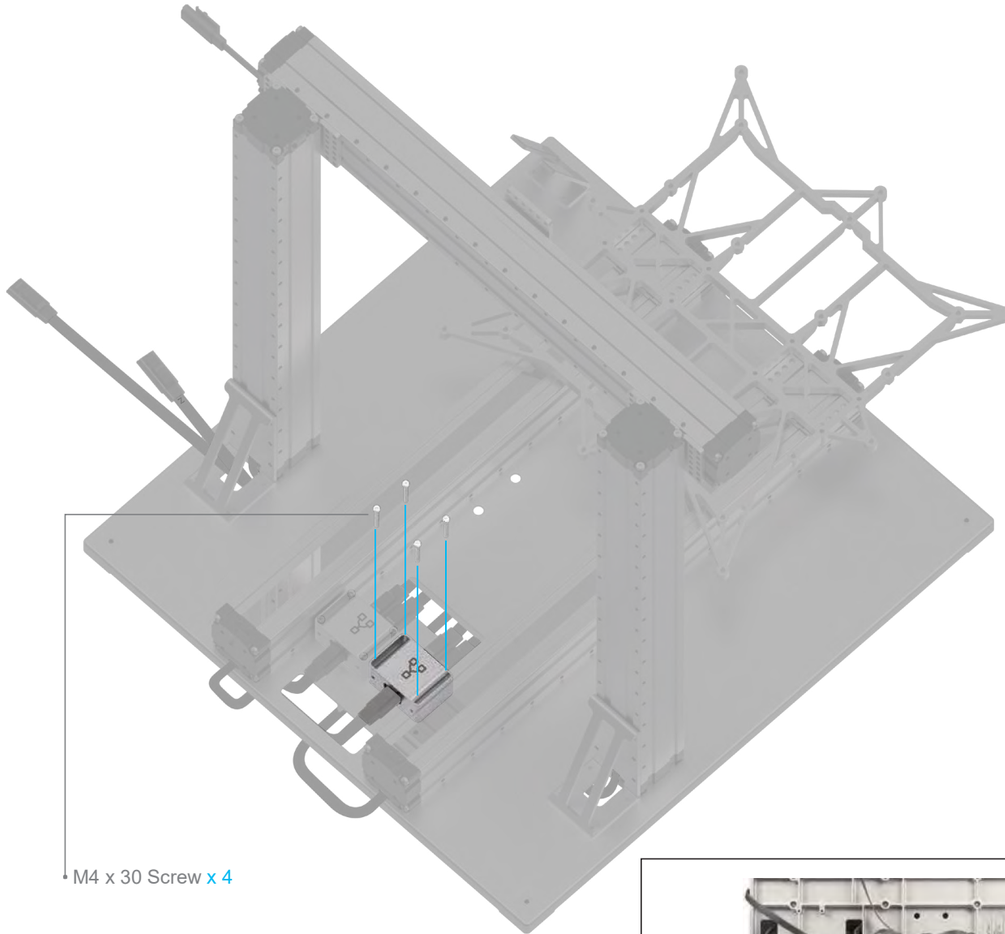

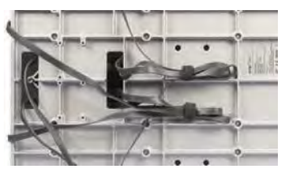

You can use the provided Cable Tie to organize the cables.

19/22

Attach the Controller to the Z axis.

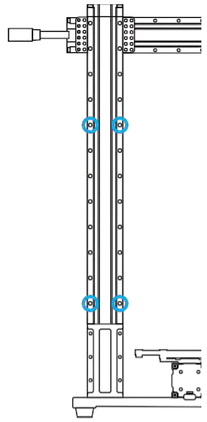

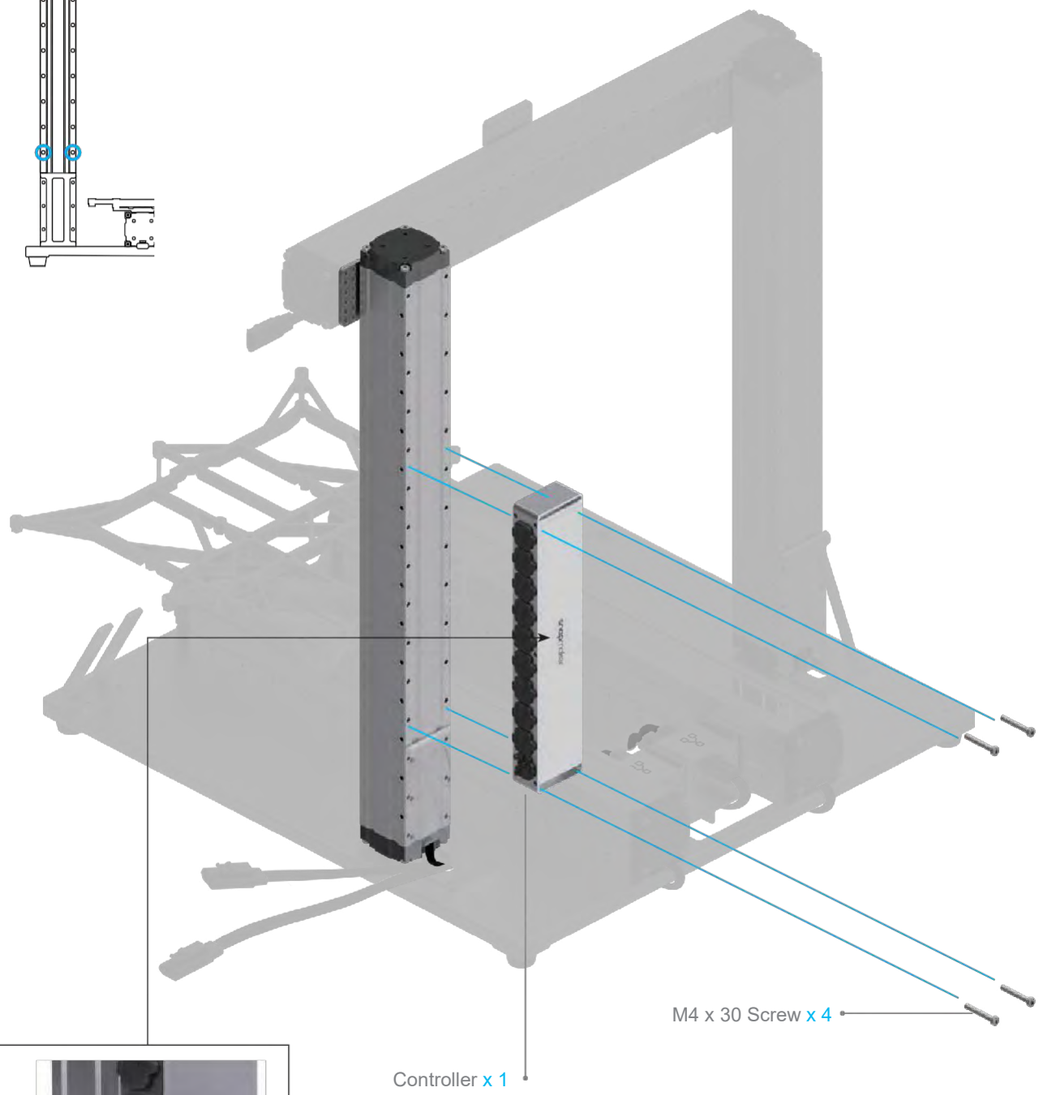

20/22

Open the dust plugs, then connect the X, Y and Z axis to the Controller.

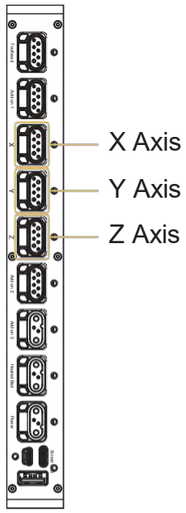

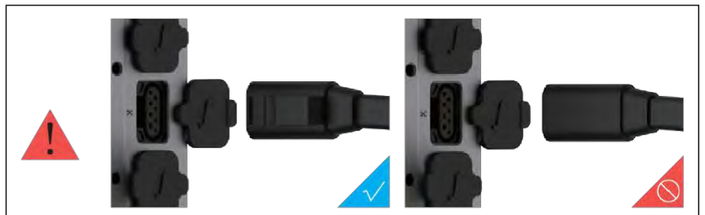

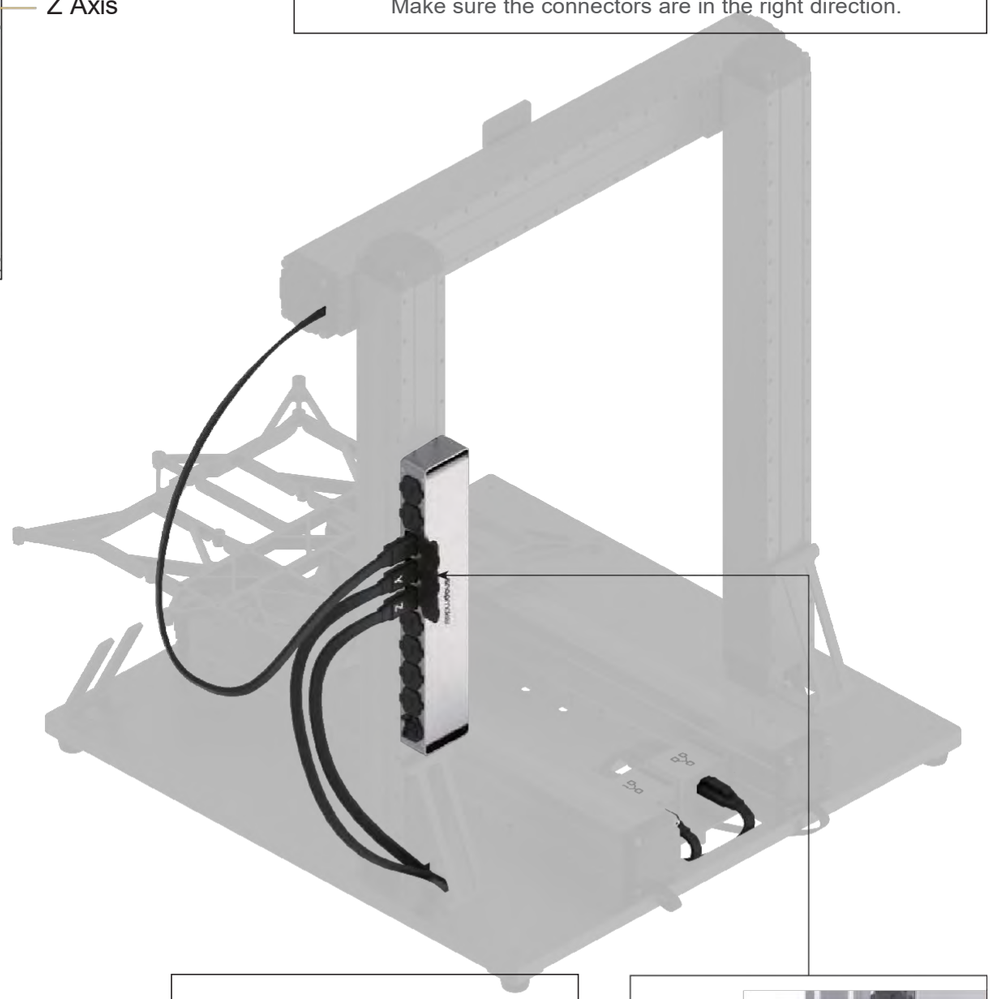

Keep the protective dust plugs on the unplugged connectors. Dust accumulation may seriously affect the performance of the Controller.

21/22

Place the Touchscreen, then connect the Touchscreen to the Controller.

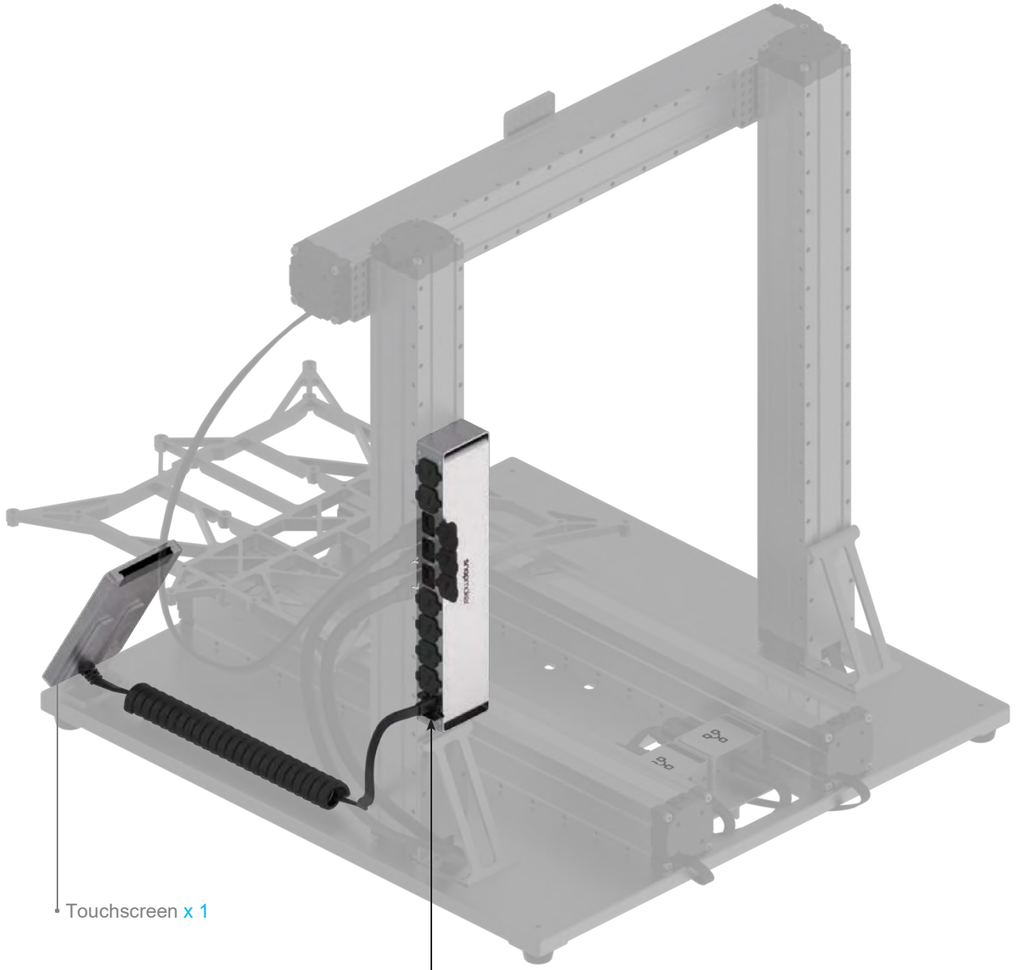

22/22

Connect the cables for the Power Module.

Do not connect or disconnect any cables when the machine is powered on.

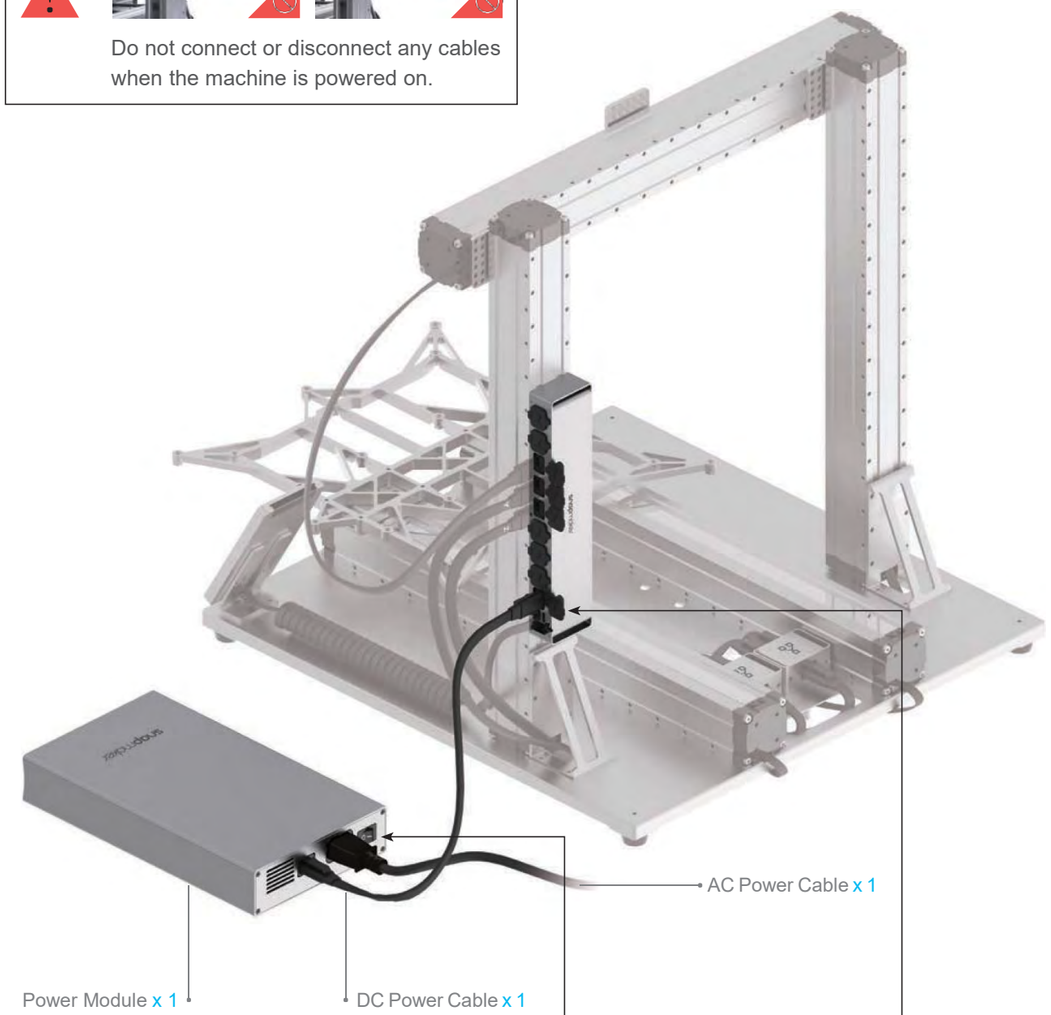

Make sure the power switch is in the Off position.

Absolutely amazing!
You have successfully assembled the machine body, just select one function to complete the assembly and bring your first job into the world!

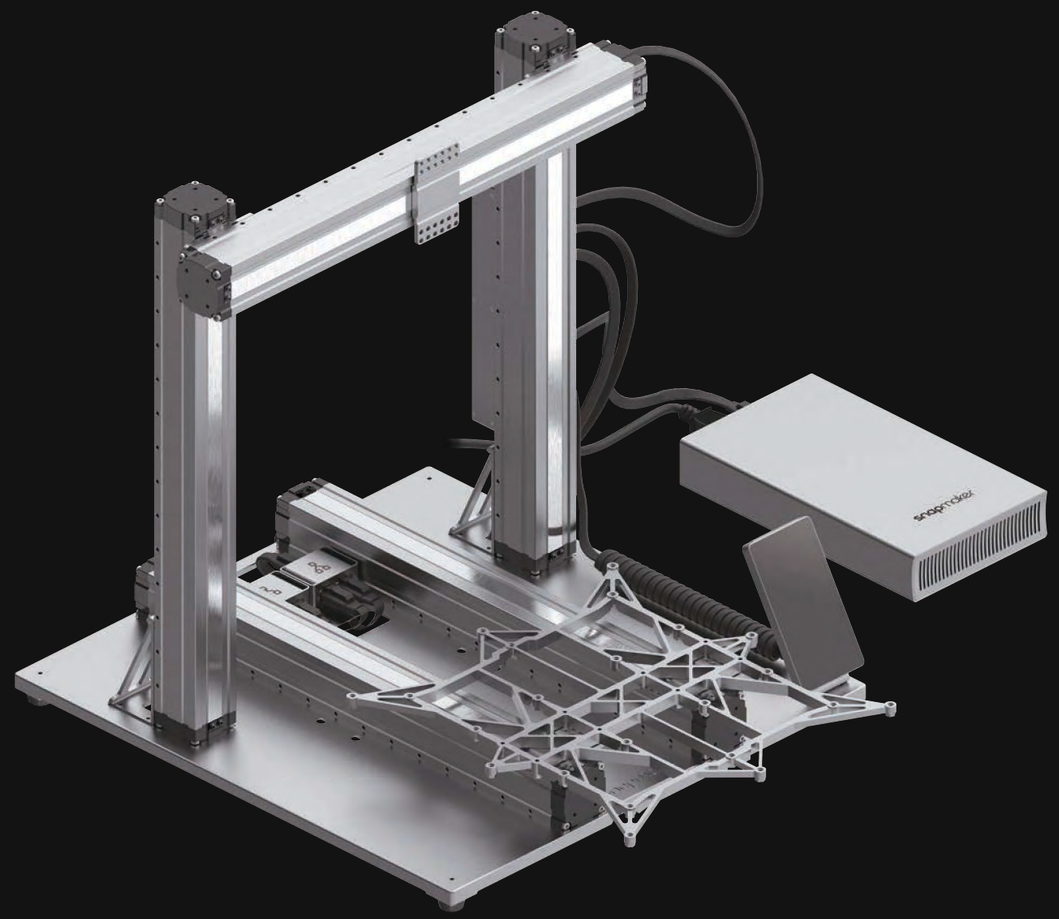

3D Printing

PAGE 38

Laser Engraving and Cutting

PAGE 56

CNC Carving

PAGE 72

3D Printing

3.1 Assembly

3.1.1 Assemble the 3D Printer

3.1.2 Initial Setup

3.2 Get Started

3.2.1 Calibrate the Bed

3.2.2 Load Filament

3.3 Start Printing

3.3.1 Prepare the G-code File

3.3.2 Start Your First Print

3.3.3 Remove the Print