3.1.1 Assemble the 3D Printer

Guides & Pictures / Snapmaker

01/07

Attach the 3D Printing Module to the slider on the X axis.

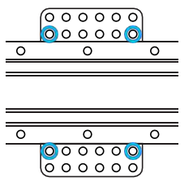

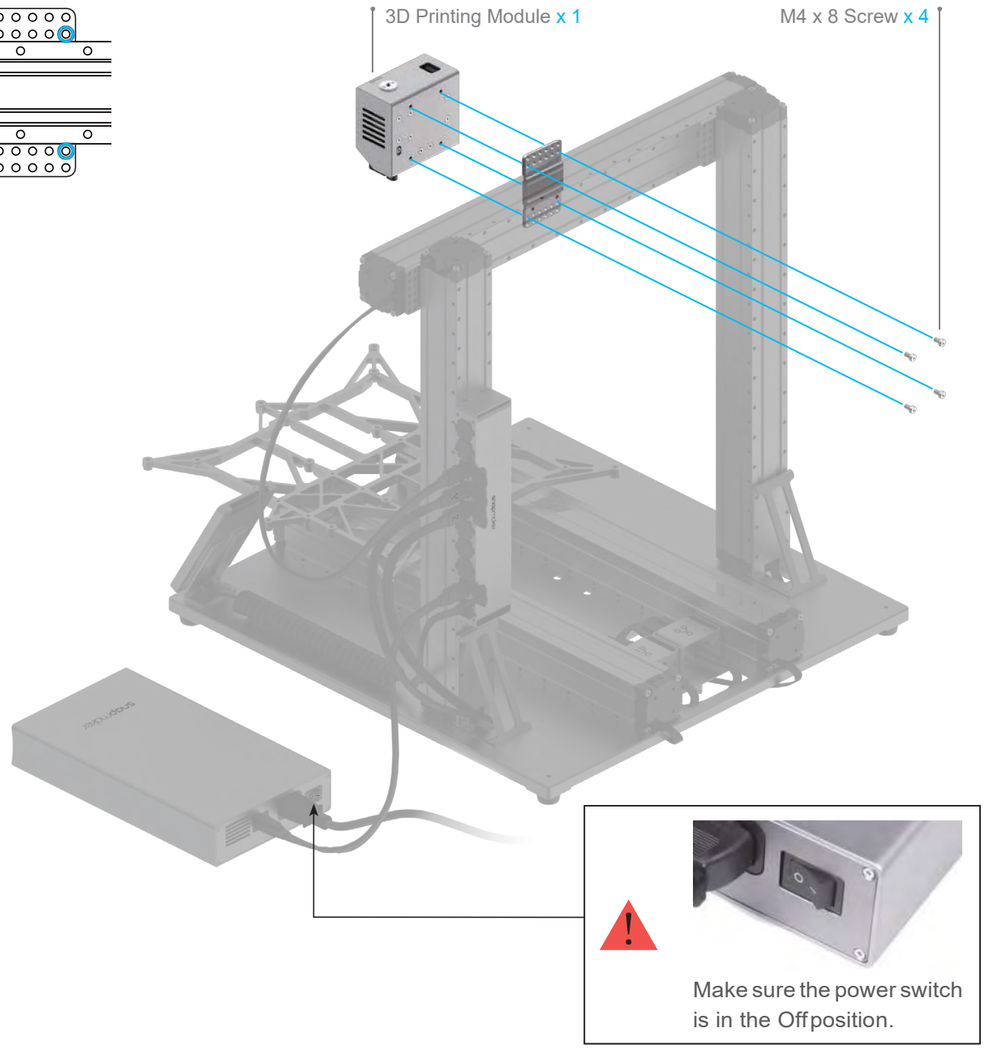

Make sure the power switch is in the Off position.

02/07

Connect the 3D Printing Module to the Controller.

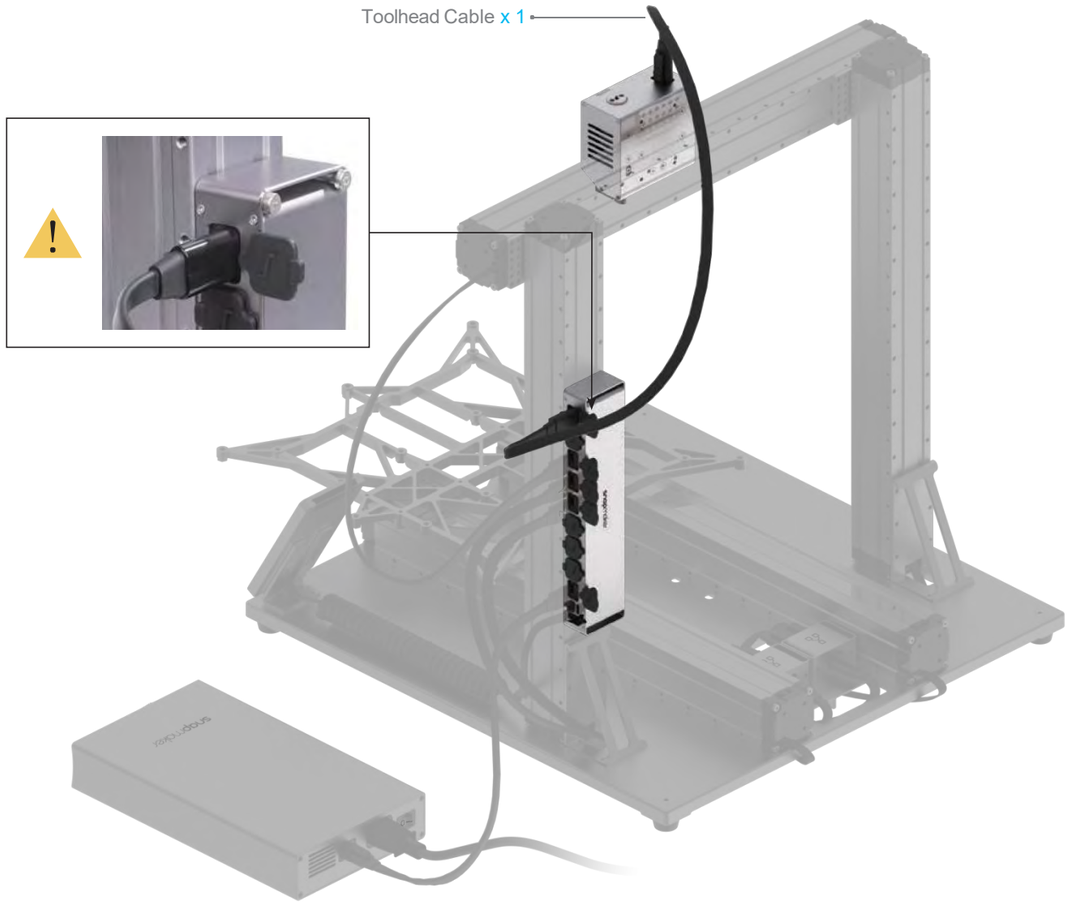

03/07

Attach the Filament Holder to the Z axis.

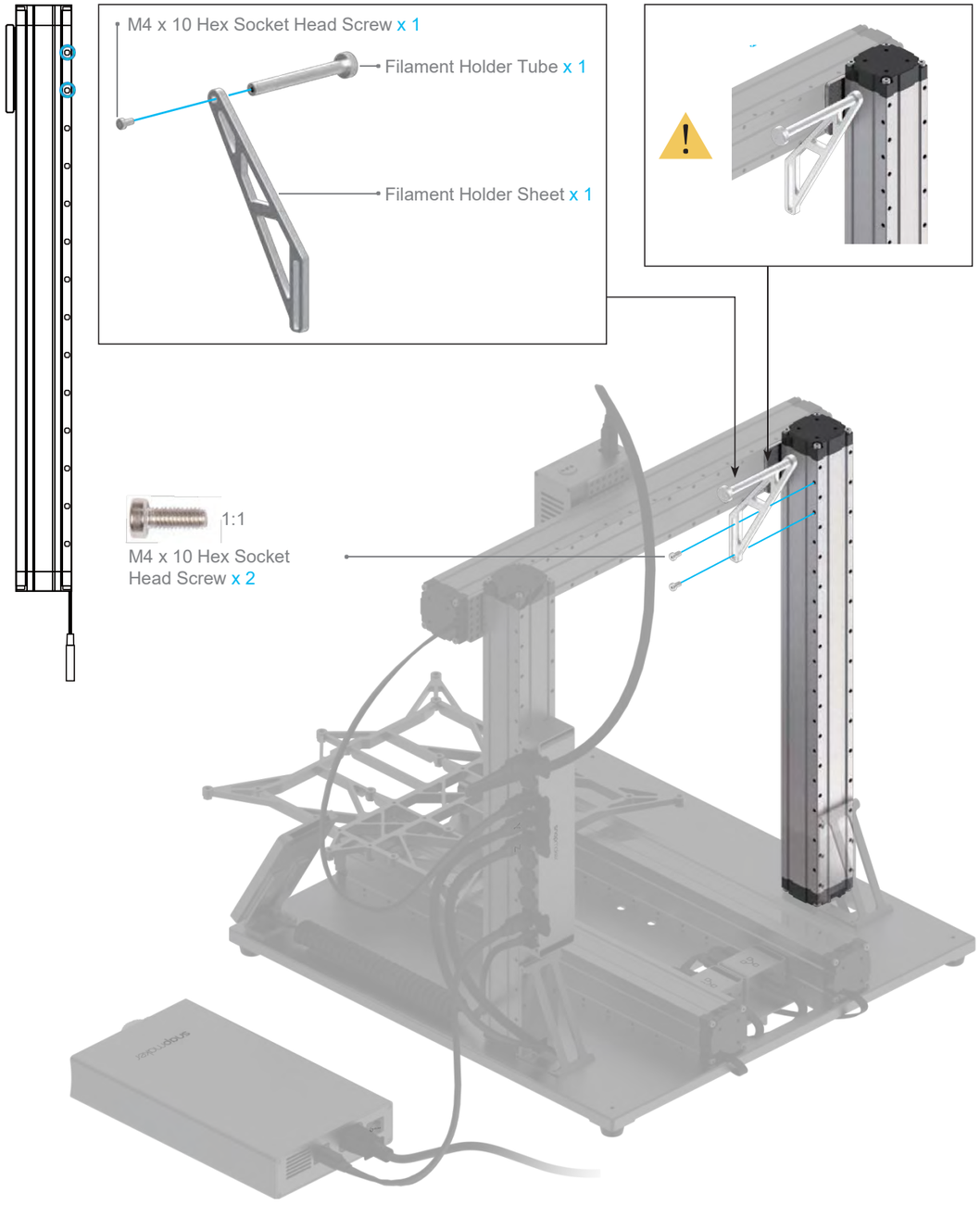

04/07

Attach the Heated Bed to the Platform.

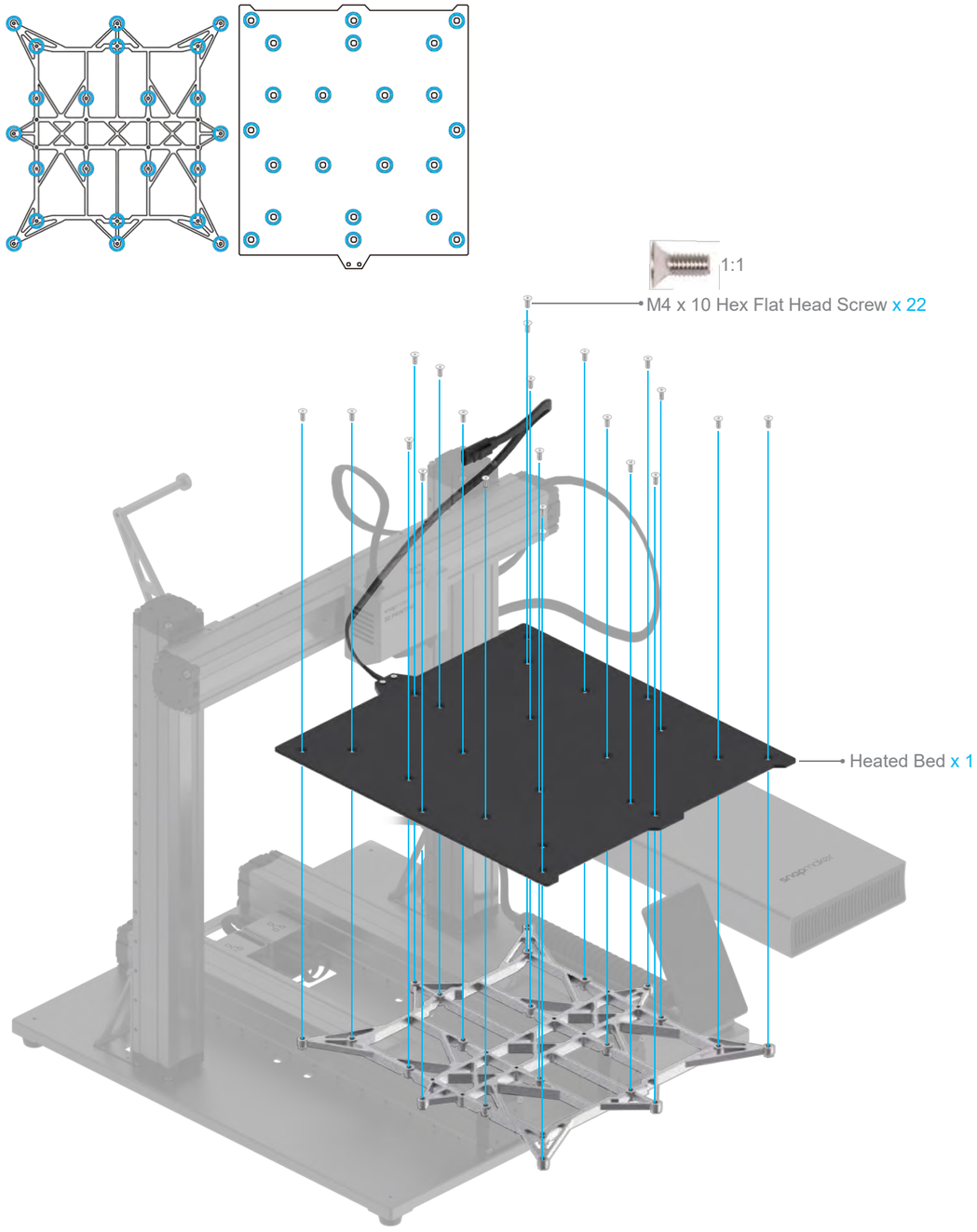

05/07

Place the Print Sheet.

Make sure the Heated Bed is clean and there isn't any dust or dirt on it before you place the Print Sheet.

Make sure the Print Sheet aligns perfectly with the Heated Bed.

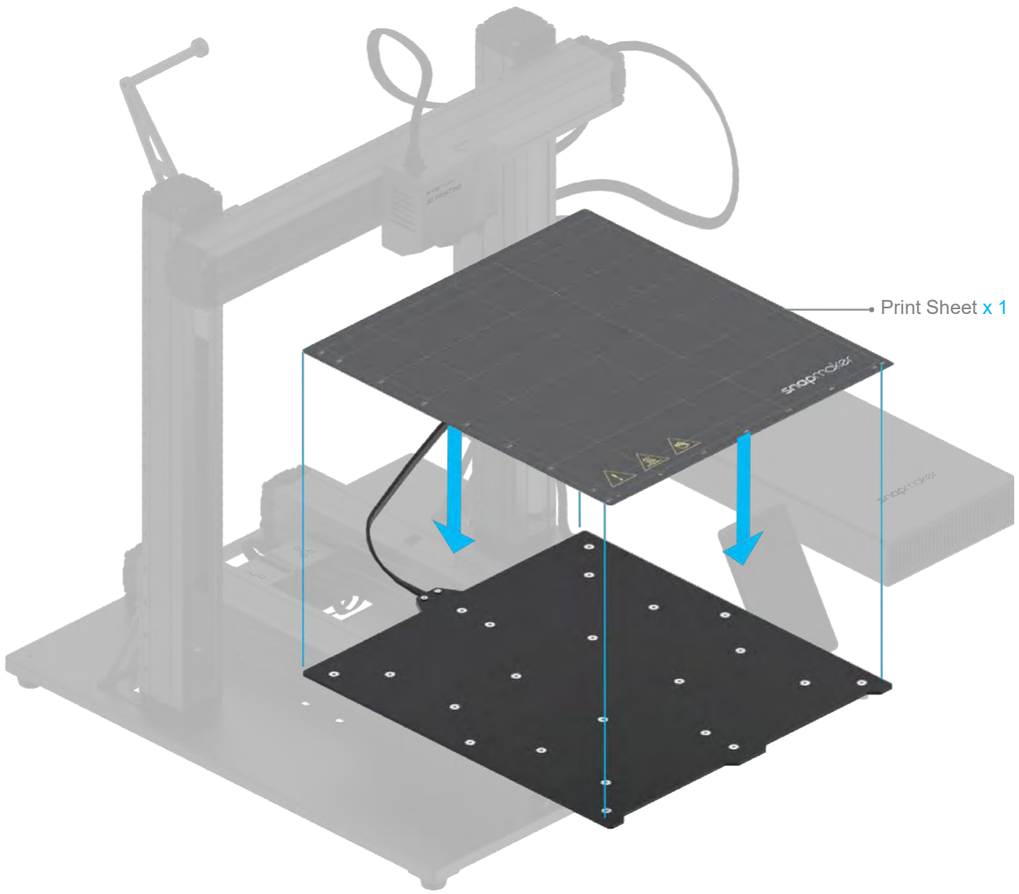

06/07

Connect the Heated Bed to the Controller.

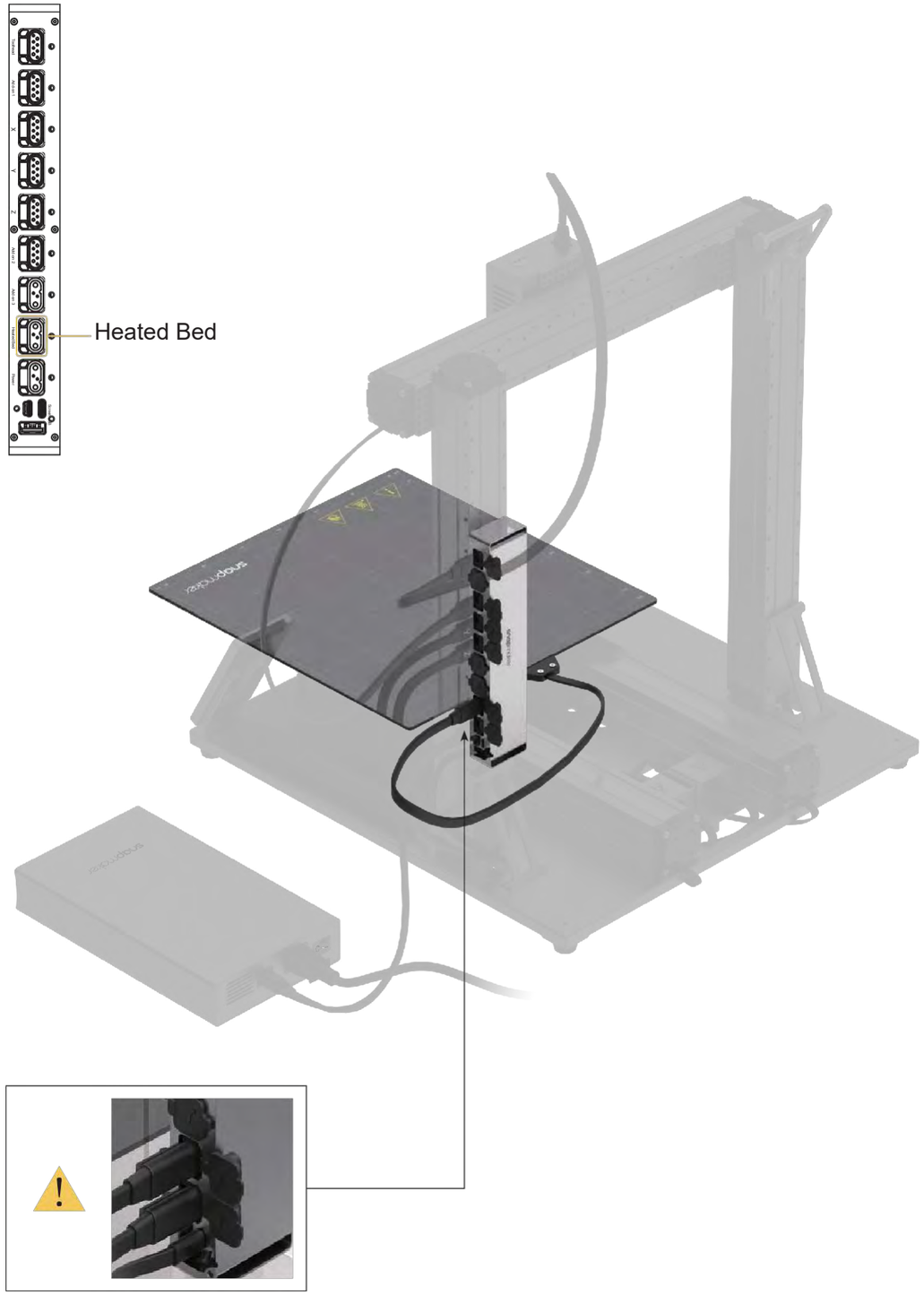

07/07

Attach the Cable Holder to the Z axis, then lock the Toolhead Cable into place.

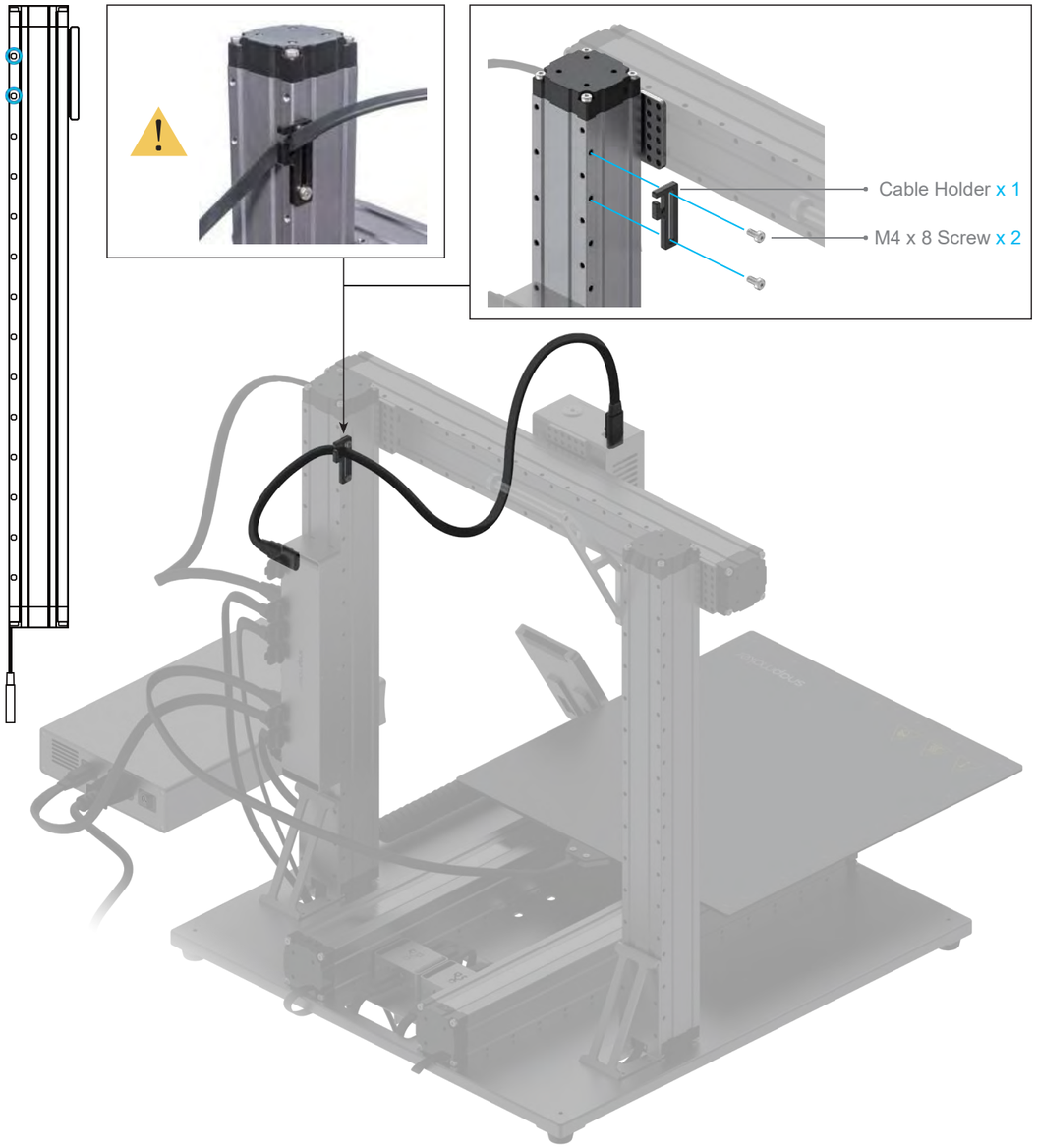

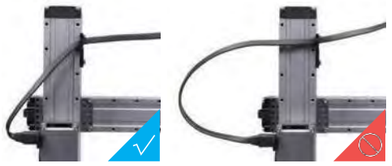

Make sure there is enough cable length for the toolhead for movement.

3.1.2 Initial Setup

Guides & Pictures / Snapmaker

Plug the AC Power Cable into an electrical outlet. Switch the power on and follow the prompts on the touchscreen: Read the Terms -> Name the Machine -> Connect to a Wi-Fi Network.

It is recommended to wait for 5 seconds when you turn your machine off and on again.

Please skip this step if you have completed the initial setup. If you need to change the settings above, swipe left on the home page of the touchscreen -> select **Settings** -> tap **Wi-Fi** or **About Machine** as needed.

The initial guide, which helps you get started, will appear only once. If you need to launch it again, swipe left on the home page of the touchscreen -> select **Settings** ->tap **Guides**.

3.2.1 Calibrate the Bed

Guides & Pictures / Snapmaker

How It Works: Auto Leveling

The 3D printing module conducts a compensation leveling procedure, with the sensor measuring the distance between the nozzle and the heated bed at specific points. The movements of the extruder are adjusted to ensure that the nozzle and the heated bed are at an optimum distance throughout the printing process.

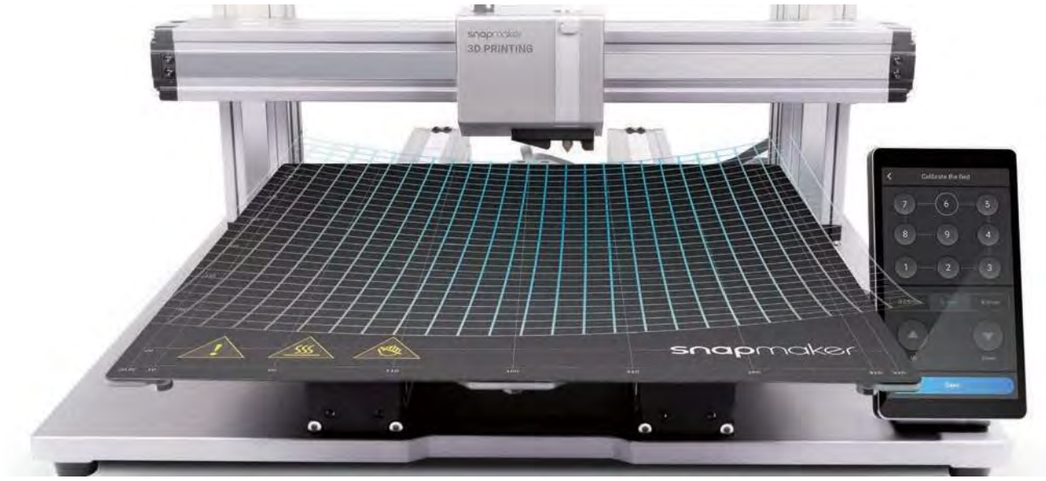

How It Works: Adjusting the Z Offset

Z Offset is the distance between the tip of the nozzle and the print surface. Adjusting the Z Offset is the process of tweaking the height of the nozzle by tiny increments. A proper Z Offset value helps ensure the first layer of your print sticks to the print sheet.

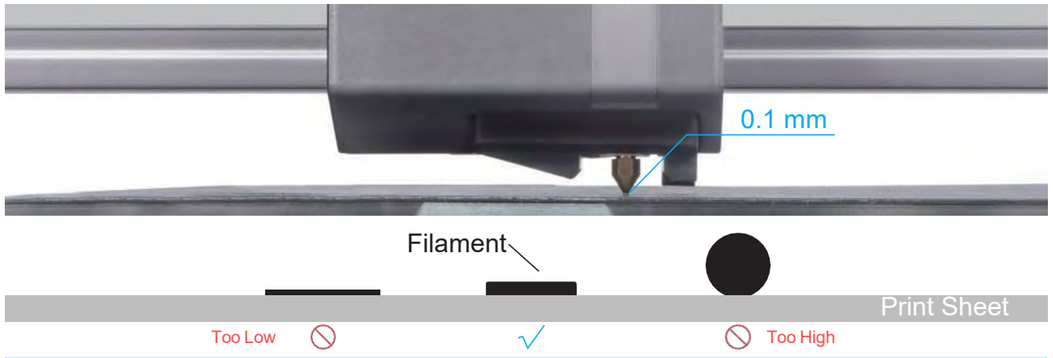

How to Level

1. Run the Auto Leveling procedure on the touchscreen.

2. Place the calibration card or a piece of A4 paper between the nozzle and the heated bed, and manually calibrate the Z Offset for the last point.

3. Keep adjusting the height of the nozzle using **Up** and **Down** buttons until there is slight resistance when you pull out the calibration card, and it should be wrinkled when you push it forward. Tap **Save** to save the calibration settings.

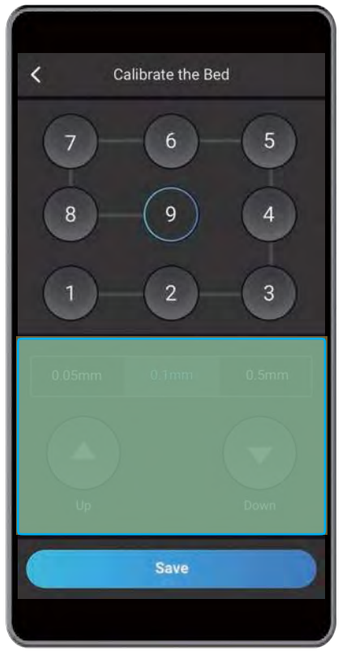

3.2.2 Load Filament

Guides & Pictures / Snapmaker

How It Works: Filament Loading

The motor drives the filament into the extruder, then the filament extrudes through the nozzle after being heated by the heated block.

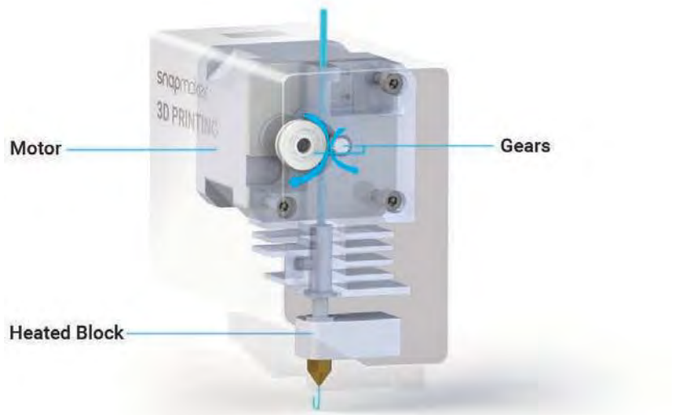

How to Load Filament

1. Hang the provided PLA filament over the filament holder. Cut the bending end of the filament using the diagonal pliers, then insert the filament into the 3D printing module.

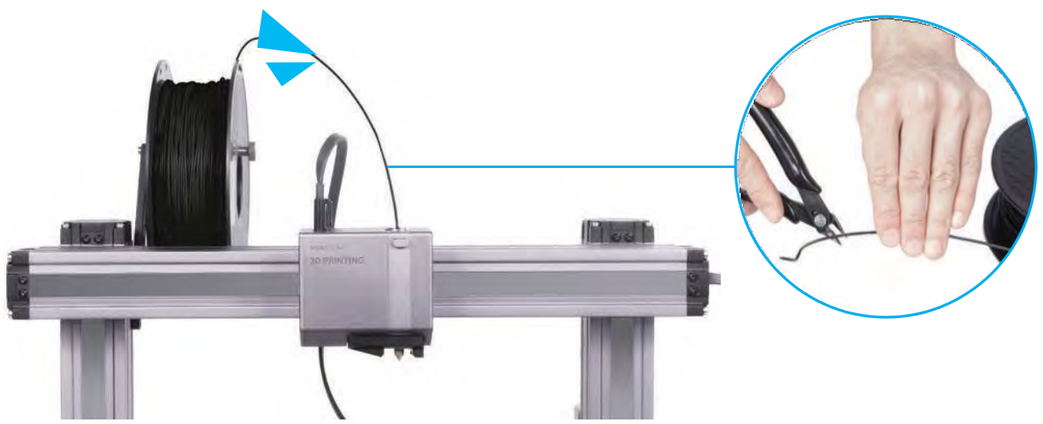

2. Tap **Start** on the **Load Filament** screen. After the temperature reaches the target temperature, tap **Load** and then gently push the filament into the 3D printing module until you can feel the motor pulling the filament in.

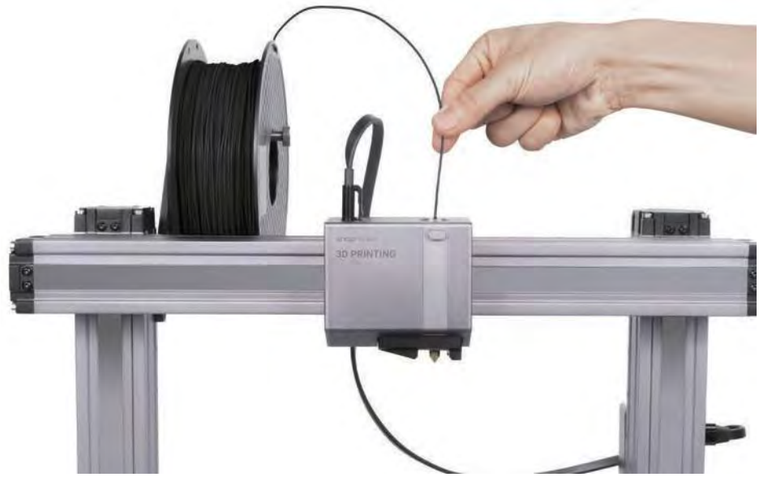

You can change the target **Nozzle Temp** by sliding the scale bar.

3. Clean the nozzle using the tweezer, then tap **Done**.

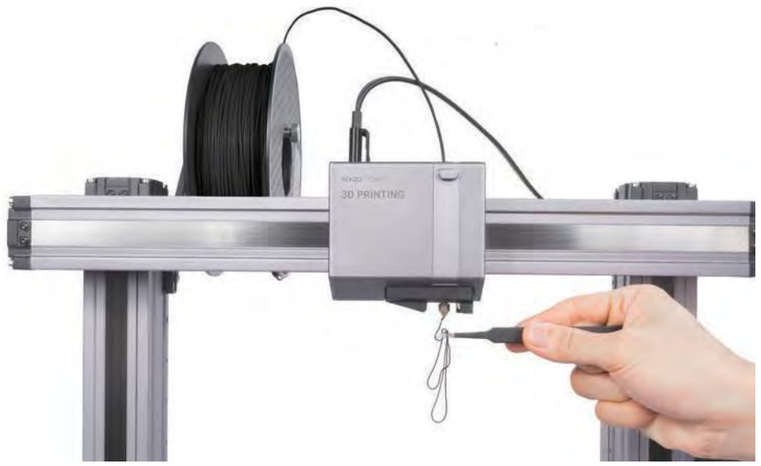

If there is no filament coming out of the nozzle, do not tap **Done** until you repeat the steps above and the filament extrudes successfully.

Congratulations!

You are now ready to print. Please continue to generate the G-code file.

When you need to change the filament, select **Controls** and **Nozzle**. After the temperature reaches the target temperature, tap **Unload** and pull the filament out of the module.

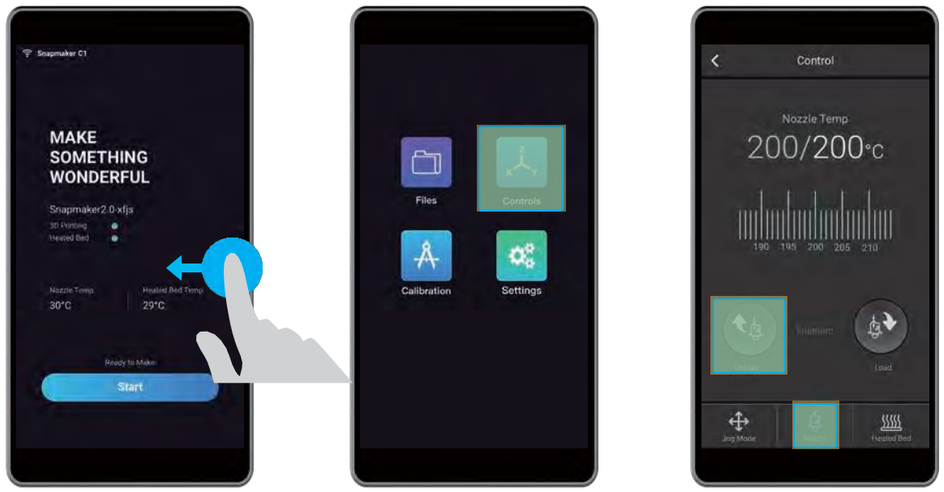

3.3.1 Prepare the G-code File

Guides & Pictures / Snapmaker

1. Install the Software and Complete the Initial Setup

Download our software Snapmaker Luban at https://snapmaker.com and install it. Then connect to a Wi-Fi network: Enter the Workspace -> Connection -> Select **Wi-Fi** -> Click -> Select your machine -> Click **Open** -> Tap **Yes** on the touchscreen.

2. Generate the G-code File and Send It to the Machine

① Load the test file -> ② Use the default settings specifically configured for the test file -> ③ Generate the G-code file -> ④ Load G-code to Workspace -> ⑤ Send G-code to the machine via Wi-Fi.

You can also upload your own files by clicking **Open File** and configure the file settings. For more instructions, please refer to our online user manual.

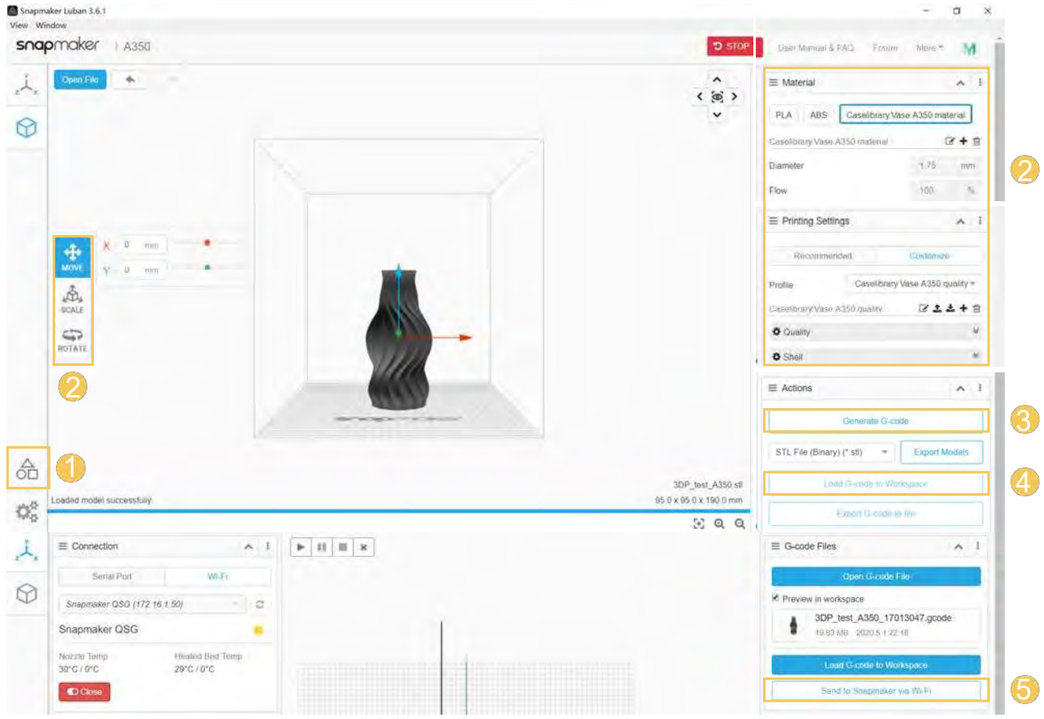

Files sent by Wi-Fi can be found on the touchscreen: **Files** > **Local**.

You can also send the G-code files to the machine via the USB disk. Click **Export G-code to file** in Snapmaker Luban and save it to the USB disk, then insert the USB disk into the controller and select **Files** > **USB** on the touchscreen.

3.3.2 Start Your First Print

Guides & Pictures / Snapmaker

After receiving the G-code file, tap **Yes** and **Start** on the touchscreen to start printing.

If you need to adjust settings, you can either tap **Adjust Settings** prior to printing or swipe left on the printing progress screen.

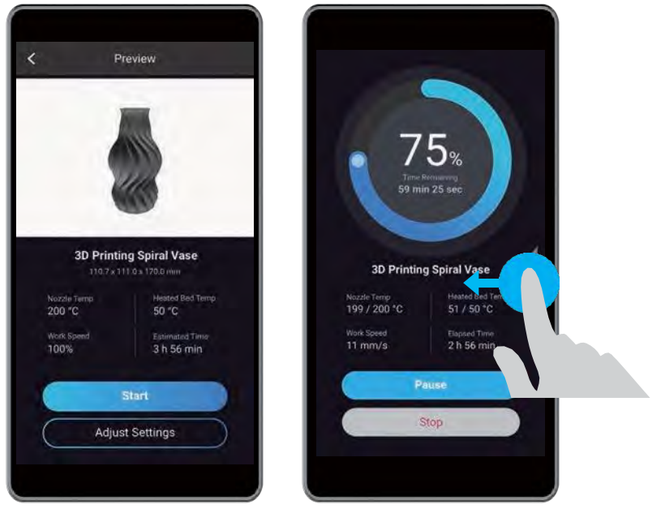

If you run into the issue of poor adhesion, swipe left on the printing progress screen and you can try adjusting the Z Offset. Or you can try leveling the heated bed again by selecting **Calibration**. Make sure the tip of the nozzle is clean before you calibrate the bed.

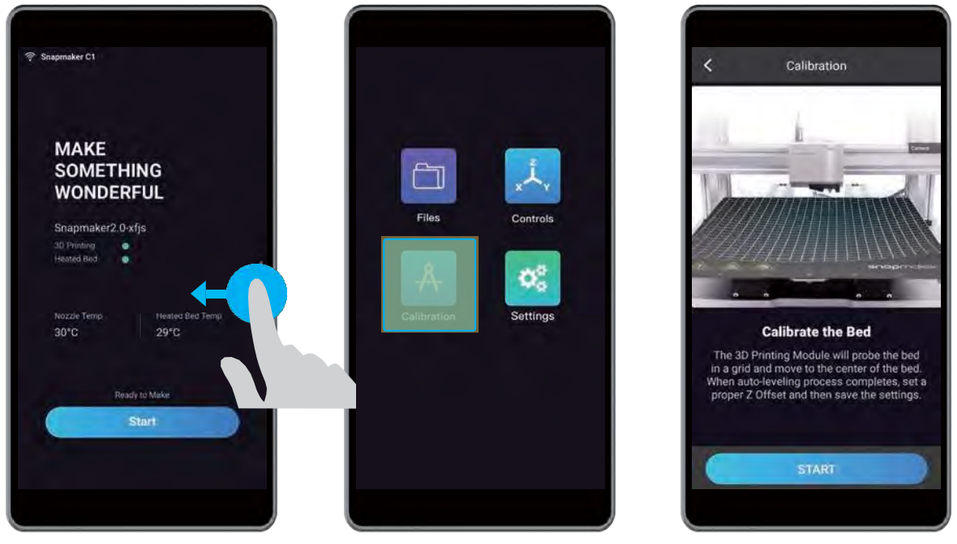

3.3.3 Remove the Print

Guides & Pictures / Snapmaker

Wait for the temperatures of the nozzle and the heated bed to drop to room temperature (displayed on the touchscreen) . Remove the print sheet from the heated bed and bend it slightly.

The nozzle and the heated bed are still extremely hot right after printing.

Remove the print sheet from the heated bed, place it down on a stable and flat surface. You can also use the palette knife to remove the print.

The palette knife is sharp.

Share!

You can share your prints in our Facebook group and our forum.

Laser Engraving and Cutting

4.1 Assembly

4.1.1 Assemble the Laser Engraver and Cutter

4.1.2 Initial Setup

4.2 Get Started

4.2.1 Measure the Focal Length

4.2.2 Calibrate the Camera

4.2.3 Fix the Material

4.3 Prepare the G-code File and Start Cutting

4.1.1 Assemble the Laser Engraver and Cutter

Guides & Pictures / Snapmaker

01/04

Attach the Laser Module to the slider on the X axis.

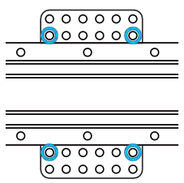

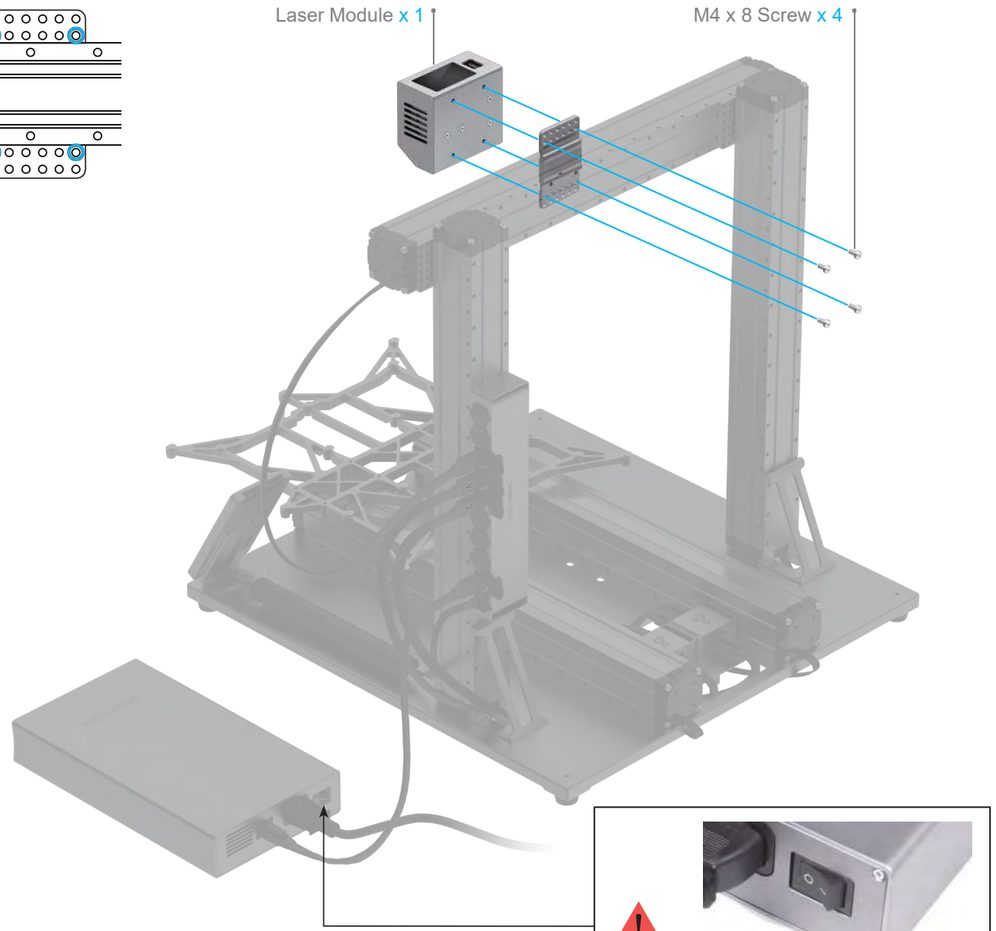

Make sure the power switch is in the Off position.

02/04

Connect the Laser Module to the Controller.

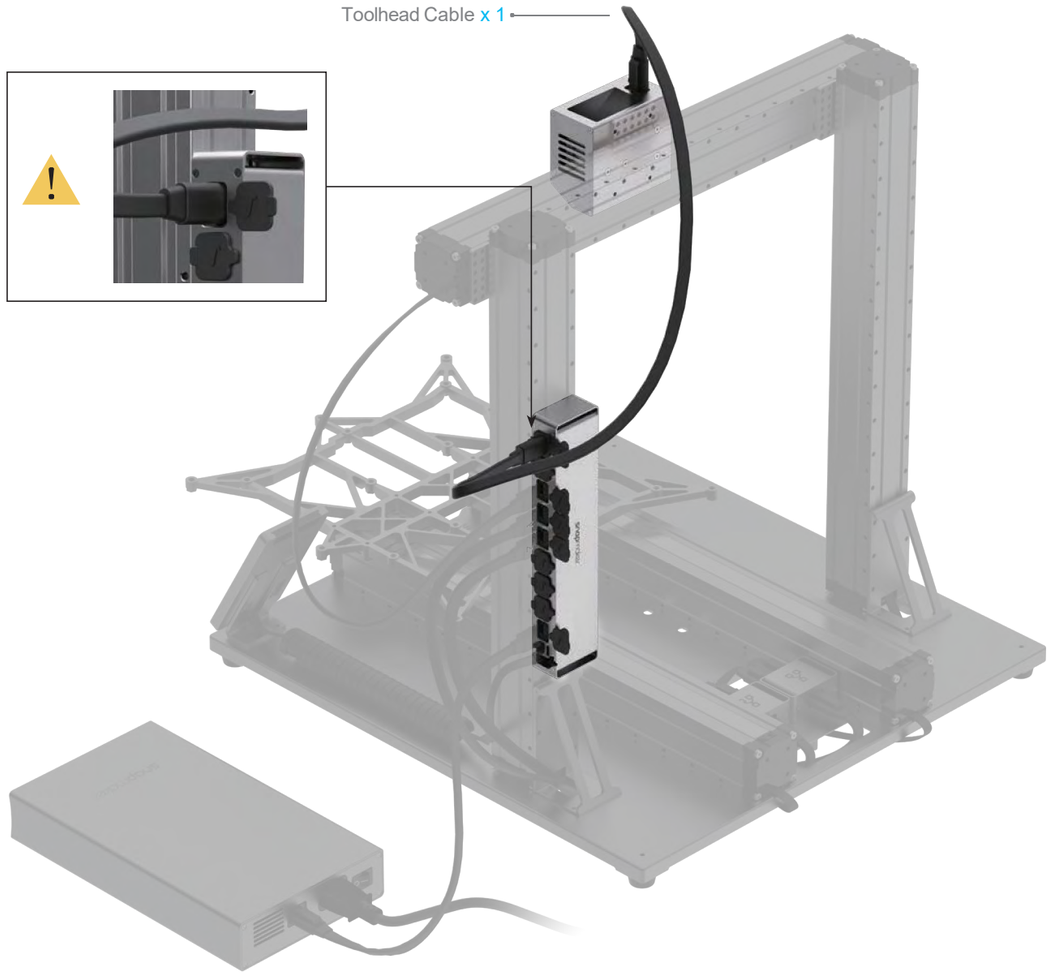

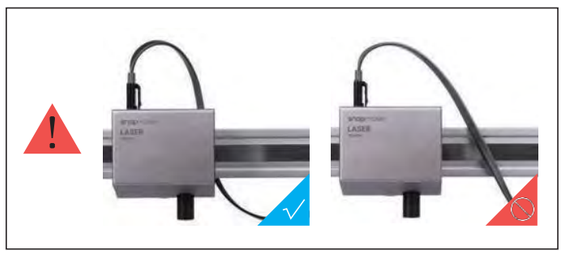

03/04

Attach the Laser Engraving/Cutting Platform to the Platform.

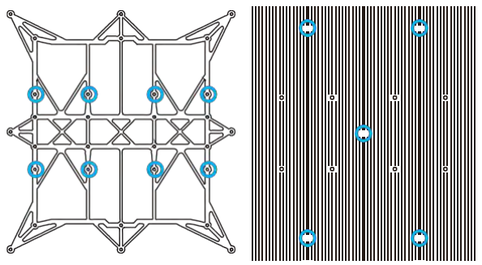

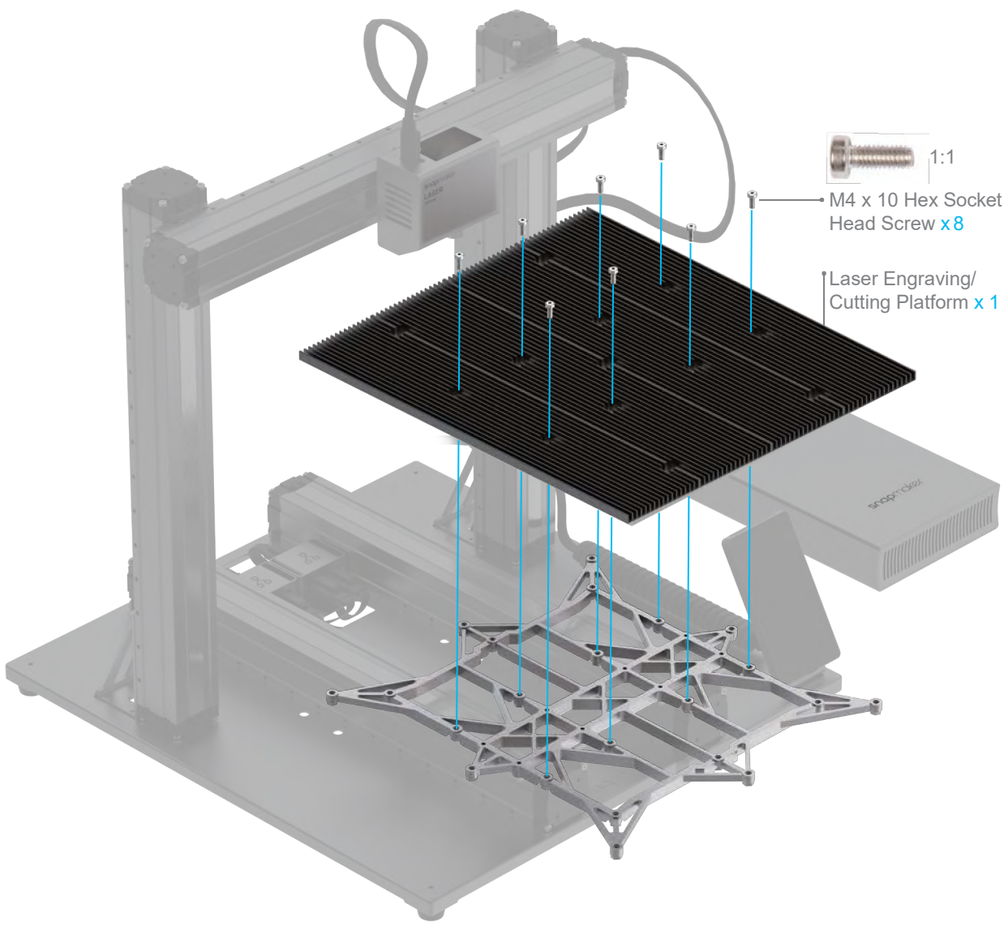

04/04

Attach the Cable Holder to the Z axis, then lock the Toolhead Cable into place.

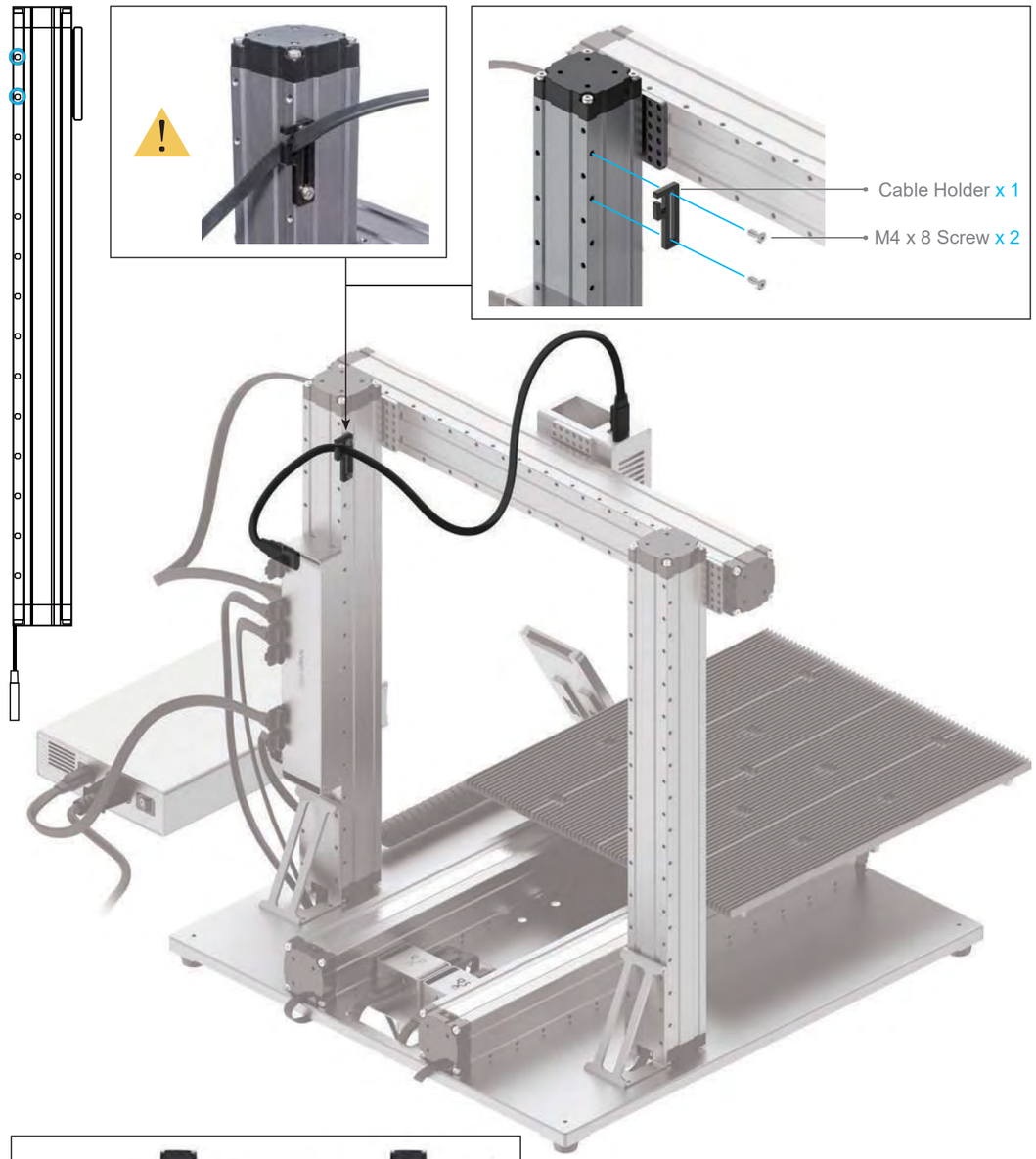

Make sure there is enough cable length for the toolhead for movement.

4.1.2 Initial Setup

Guides & Pictures / Snapmaker

Plug the AC Power Cable into an electrical outlet. Switch the power on and follow the prompts on the touchscreen: Read the Terms -> Name the Machine -> Connect to a Wi-Fi Network.

It is recommended to wait for 5 seconds when you turn your machine off and on again.

Please skip this step if you have completed the initial setup. If you need to change the settings above, swipe left on the home page of the touchscreen -> select **Settings** -> tap **Wi-Fi** or **About Machine** as needed.

The initial guide, which helps you get started, will appear only once. If you need to launch it again, swipe left on the home page of the touchscreen -> select **Settings** -> tap **Guides**.

4.2.1 Measure the Focal Length

Guides & Pictures / Snapmaker

How It Works: Focal Point

The best focusing result can only be achieved when the Focal Point is right on the surface of the material throughout engraving or cutting.

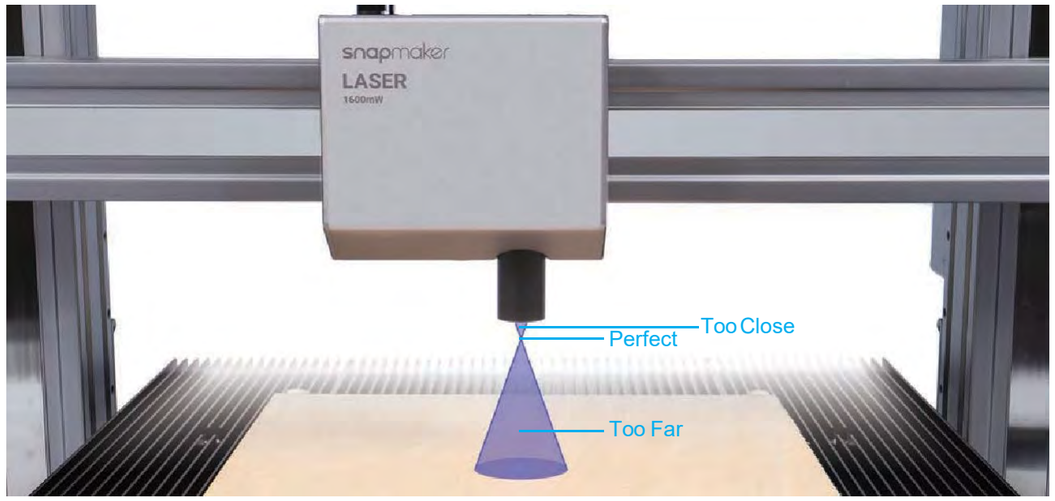

How It Works: Focal Length

The machine engraves a few lines at different heights and identify the line of the best engraving result. The distance between the laser module and the material surface, which is used for engraving this line, will be used as focal length. You just need to set the thicknesses of different materials once the focal length has been determined, the machine will automatically adjust to ensure that the focal length is consistent.

How It Works: Work Origin

Find out where the engraving/cutting will be by setting the work origin. The work origin corresponds to the (0, 0) coordinate origin in the software.

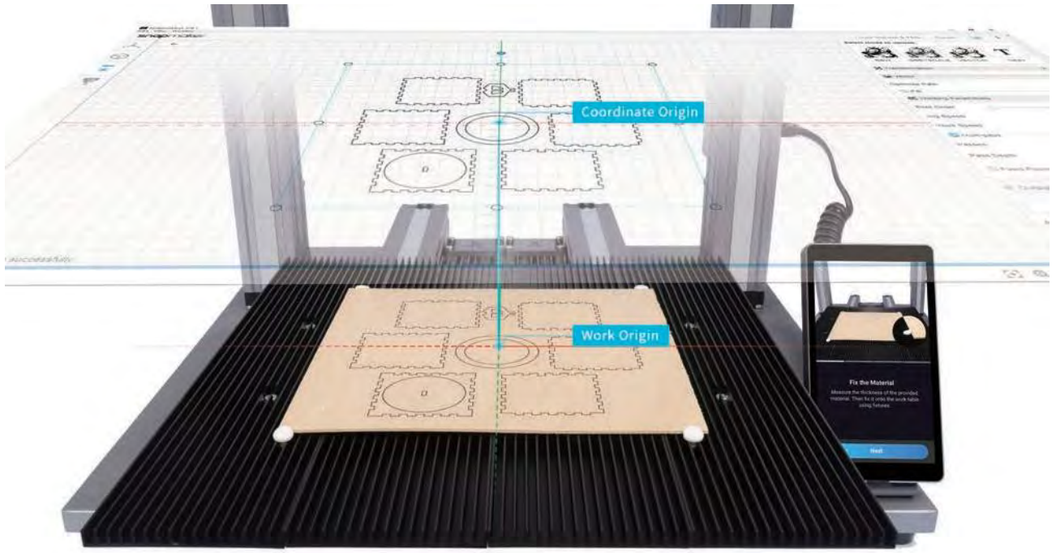

How to Measure the Focal Length

1. Place the provided material on the laser engraving/cutting platform, then fix it using the silicone plugs.

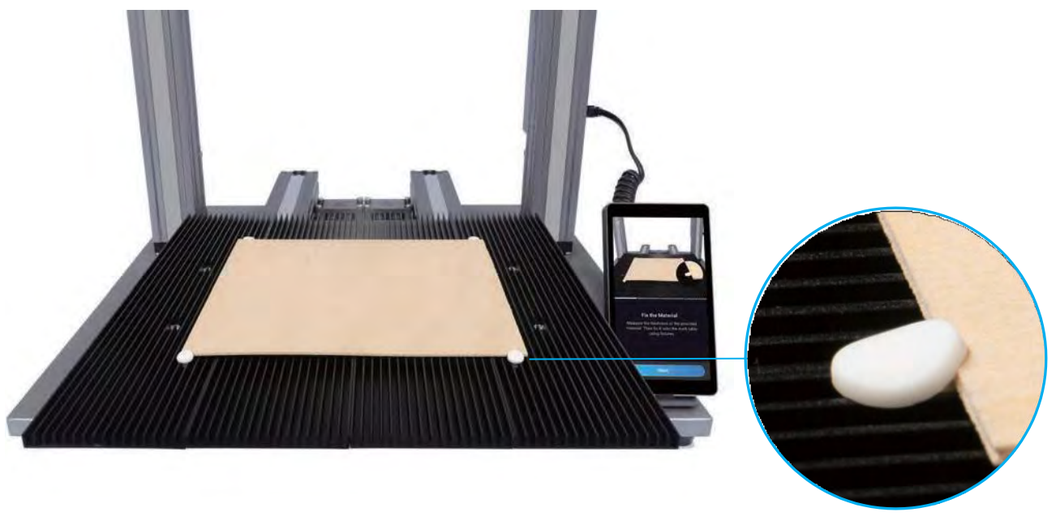

2. Set the thickness of the material (1.5mm) and tap **Save**.

3. Tap **X-/X+/Y-/Y+/Z-/Z+** to move the laser module. After the laser shade has slightly touched the surface of the material, tap **Next**. Make sure you have worn the Laser Safety Goggles before setting the work origin.

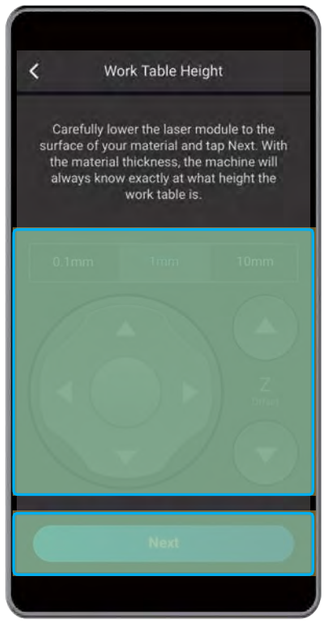

4. Tap **X-/X+/Y-/Y+** to move the laser dot to where the work origin will be, then tap **Set Work Origin** and **Run Boundary** to check if the work origin is proper. If the work origin is improper, reset the work origin and run boundary again.

If the laser module runs into any portions of the machine, turn off the machine immediately.

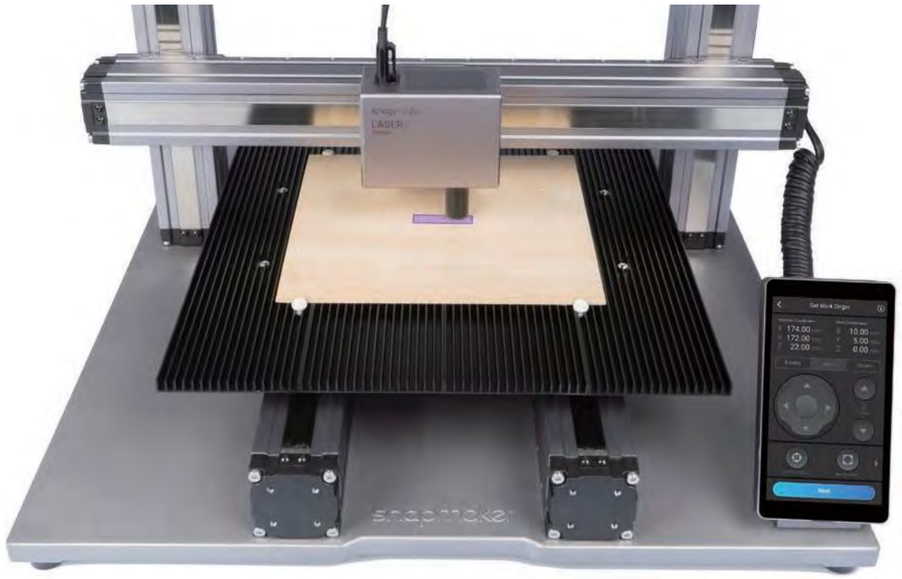

5. Tap **Start**, the machine will conduct an Auto Focus procedure.

In the event of needing to remeasure the focal length and you are not sure how to proceed, please refer to our online user manual for detailed instructions.

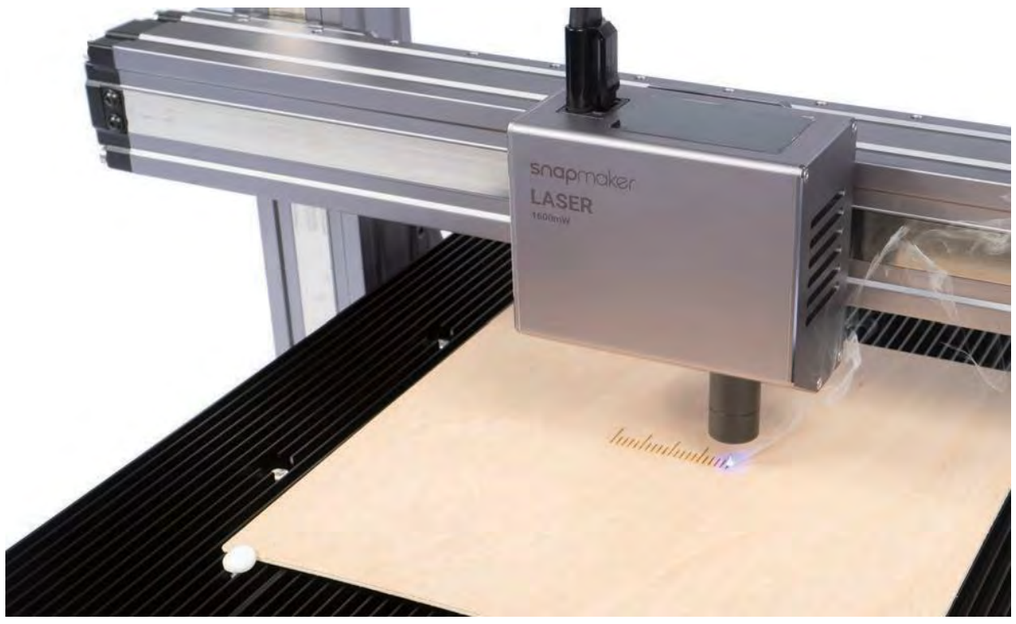

4.2.2 Calibrate the Camera

Guides & Pictures / Snapmaker

1. Remove the engraved material. Place a piece of white and blank paper (no less than 150mm x 150mm) on the center of the laser engraving/cutting platform, then fix it.

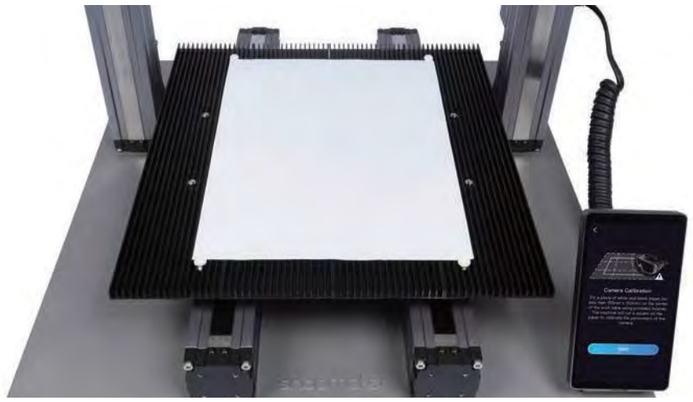

2. Tap **Start**, the machine will use the engraved square to calibrate the camera.

If you have detached the laser module from the X axis, or if you have reassembled the machine, please recalibrate the camera: swipe left on the home page of the touchscreen -> select **Settings** -> tap **Laser** -> tap **Camera Calibration**.

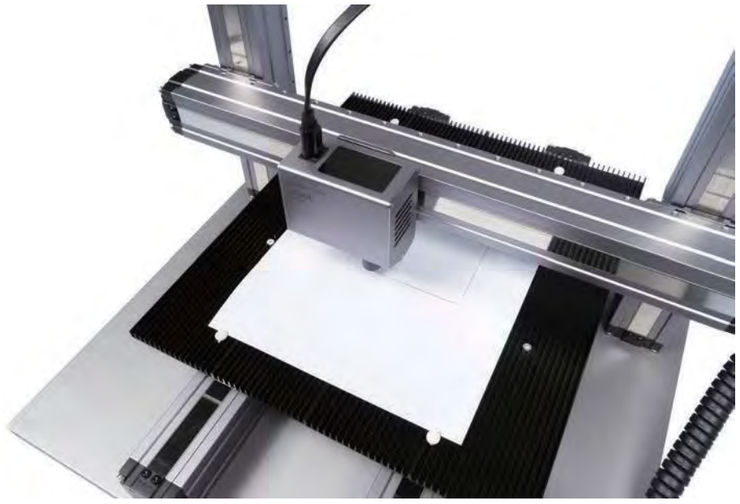

4.2.3 Fix the Material

Guides & Pictures / Snapmaker

Remove the engraved paper, then fix another provided material on the center of the laser engraving/cutting platform.

You can also fix materials using other tools.

If you need to fix thick materials, refer to **5.2.1 Fix the Material.**

Make sure the clamp set will not collide with any portions of the machine.

4.3 Prepare the G-code File and Start Cutting

Guides & Pictures / Snapmaker

1. Download our software Snapmaker Luban at https://snapmaker.com and install it. Then connect to a Wi-Fi network: Enter the Workspace -> Connection -> Select **Wi-Fi** -> Click -> Select your machine -> Click **Open**-> Tap **Yes** on the touchscreen.

2. Click **Camera Capture** in the laser G-code generator and then click **Start**. Wait for the machine to take photos and stitch them into a panorama of the platform, click **Confirm**.

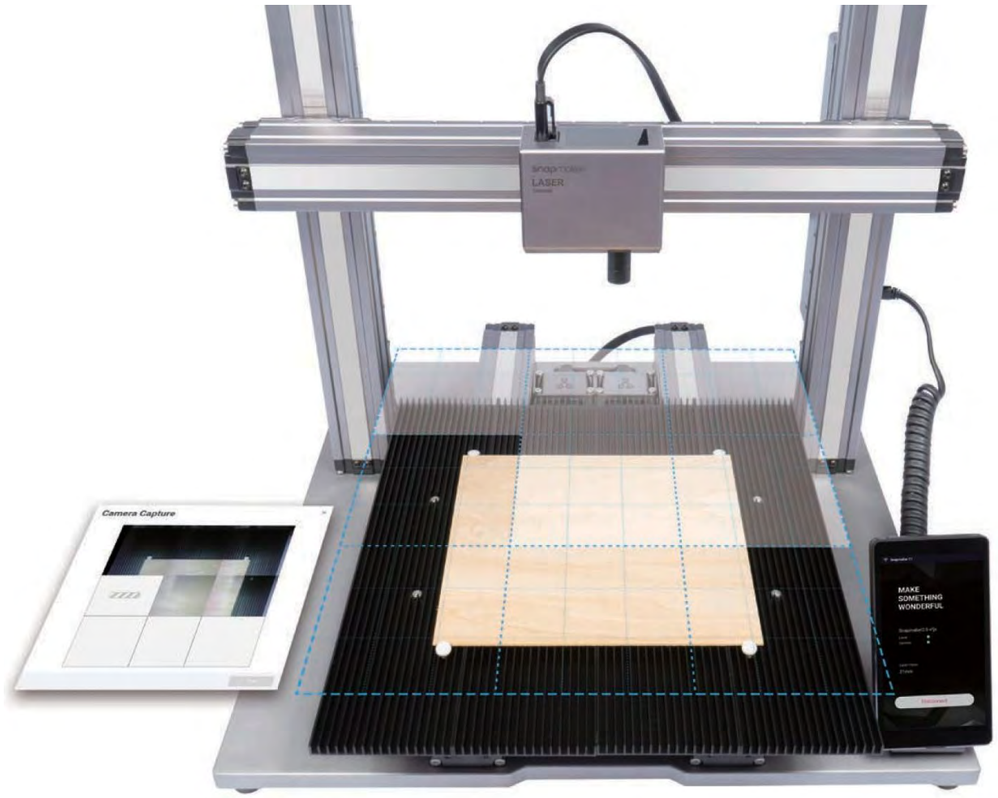

If you find the edges of the captured image are not aligned, you shall click **Calibration** to manually calibrate the camera.

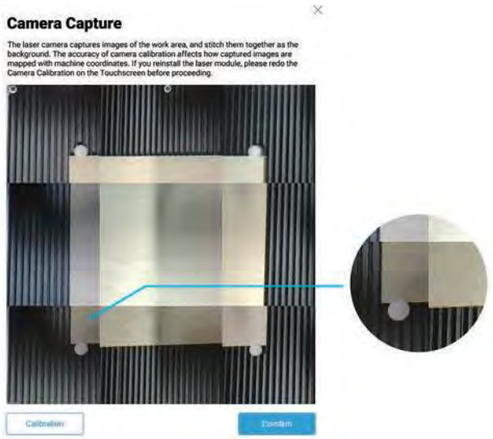

Zoom into the image and move the lines until they perfectly match the square, click **Confirm** -> **Apply** to see the finished image.

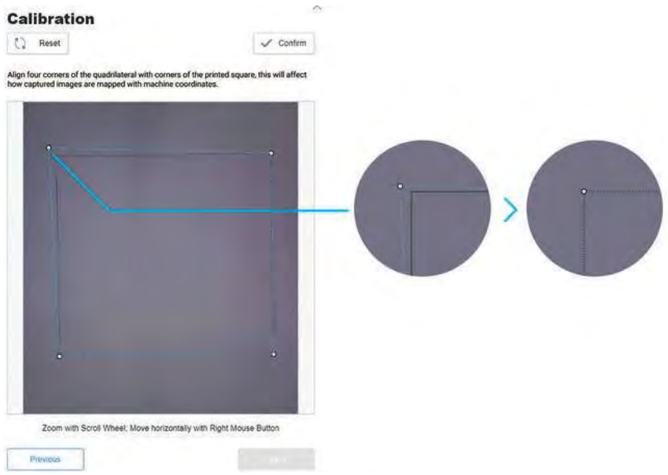

Click **Confirm** and the finished image will be loaded into the quadrant in the coordinate system. You can repeat the steps above if the edges of the captured image are still not aligned.

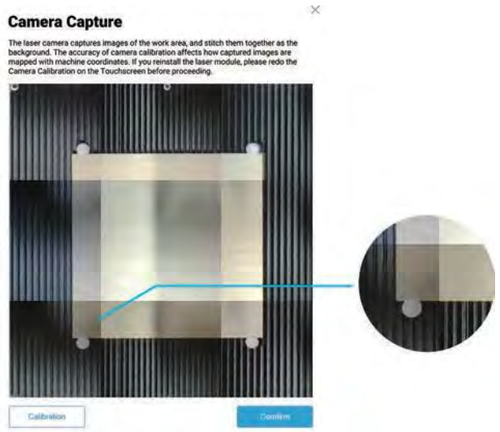

3. ① Open the test file from **Case Library** -> ② Drag the image to where the cutting will be on the captured platform -> ③ Click **Process** after configuring the settings in **Configurations** section -> ④ Use the default settings specifically configured for the test file -> ⑤ Generate the G-code file -> ⑥ Load G-code to **Workspace** -> ⑦ Set the thickness of the material -> ⑧ Click **Run** ▶ .

You can also upload your own files by clicking **Open File** in **Editor** and configure the file settings.

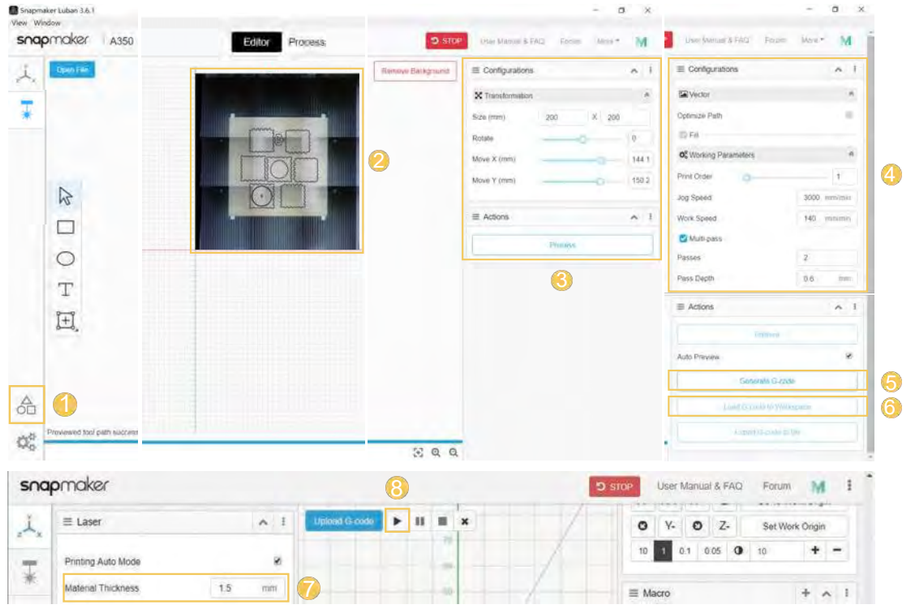

You can also start engraving/cutting by using the USB disk, connecting with the USB cable, or sending G-code files via Wi-Fi. For detailed instructions, please refer to our online user manual.

Unlike the Camera Capture method, you will need to set the work origin if you use the methods above.

4. Remove the finished work and complete the assembly.

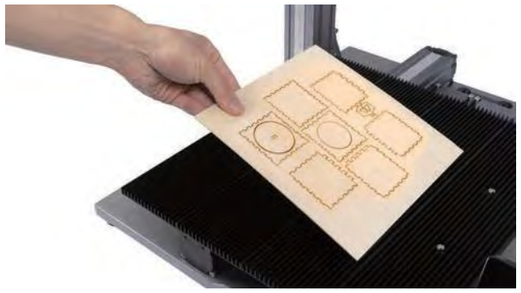

Share!

You can share your finished work in our Facebook group and our forum.

CNC Carving

5.1 Assembly

5.1.1 Assemble the CNC Carver

5.1.2 Initial Setup

5.2 Get Started

5.2.1 Fix the Material

5.2.2 Attach the Bit

5.3 Start Carving

5.3.1 Prepare the G-code File

5.3.2 Set the Work Origin and Start Carving

5.3.3 Clean the Finished Work

5.1.1 Assemble the CNC Carver

Guides & Pictures / Snapmaker

01/04

Attach the CNC Module to the slider on the X axis.

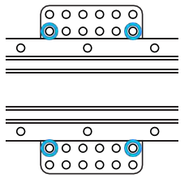

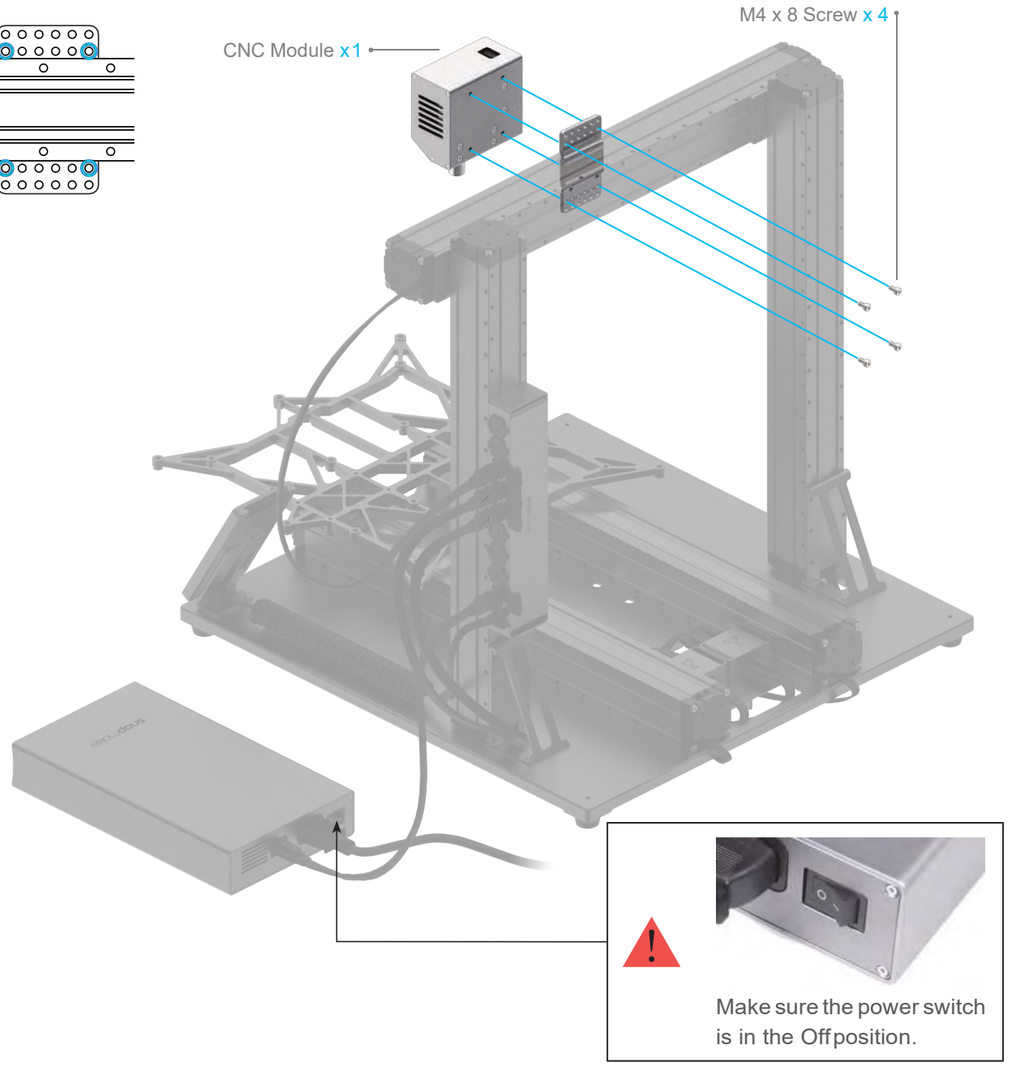

02/04

Connect the CNC Module to the Controller.

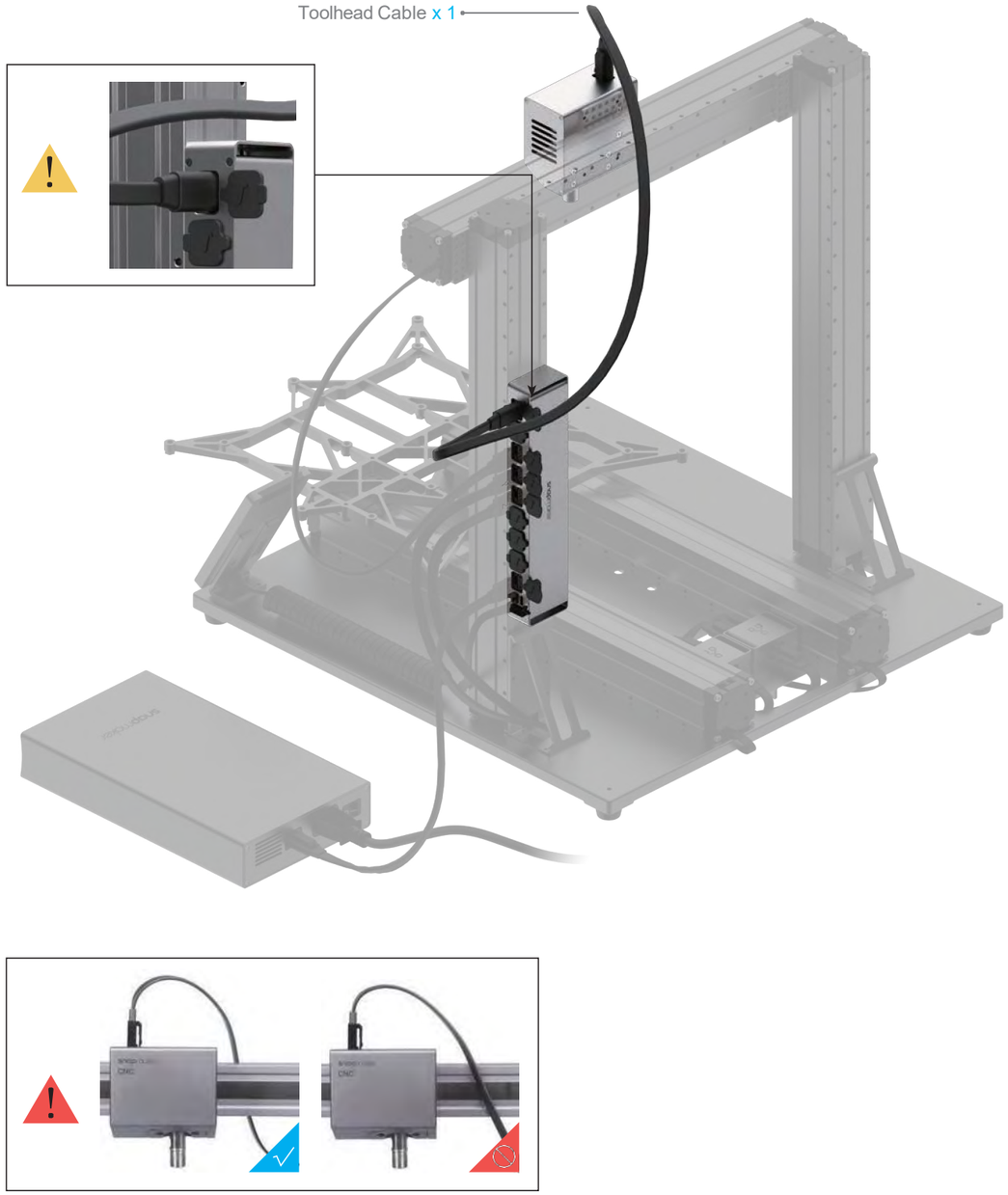

03/04

Attach the CNC Carving Platform to the Platform.

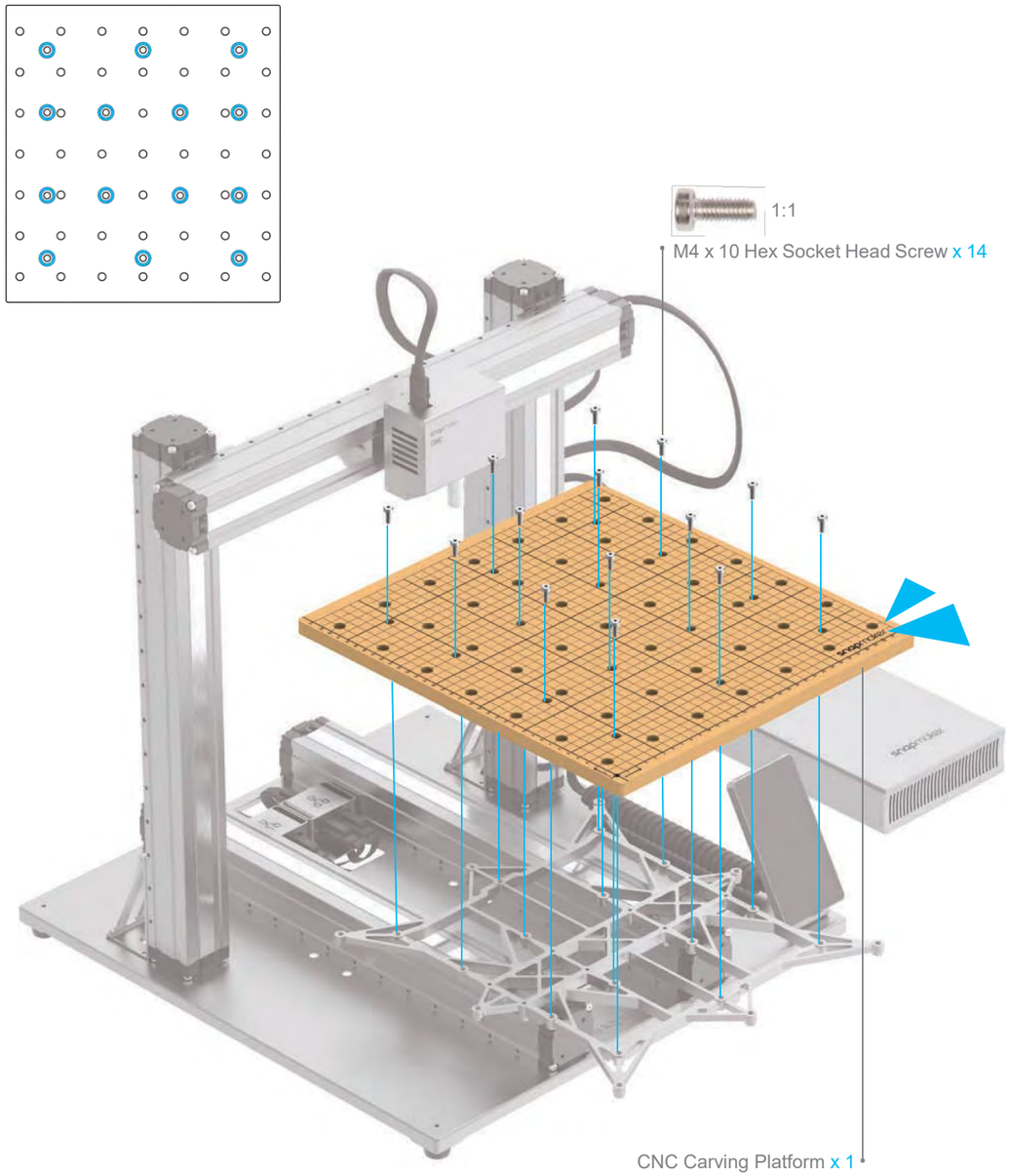

04/04

Attach the Cable Holder to the Z axis, then lock the Toolhead Cable into place.

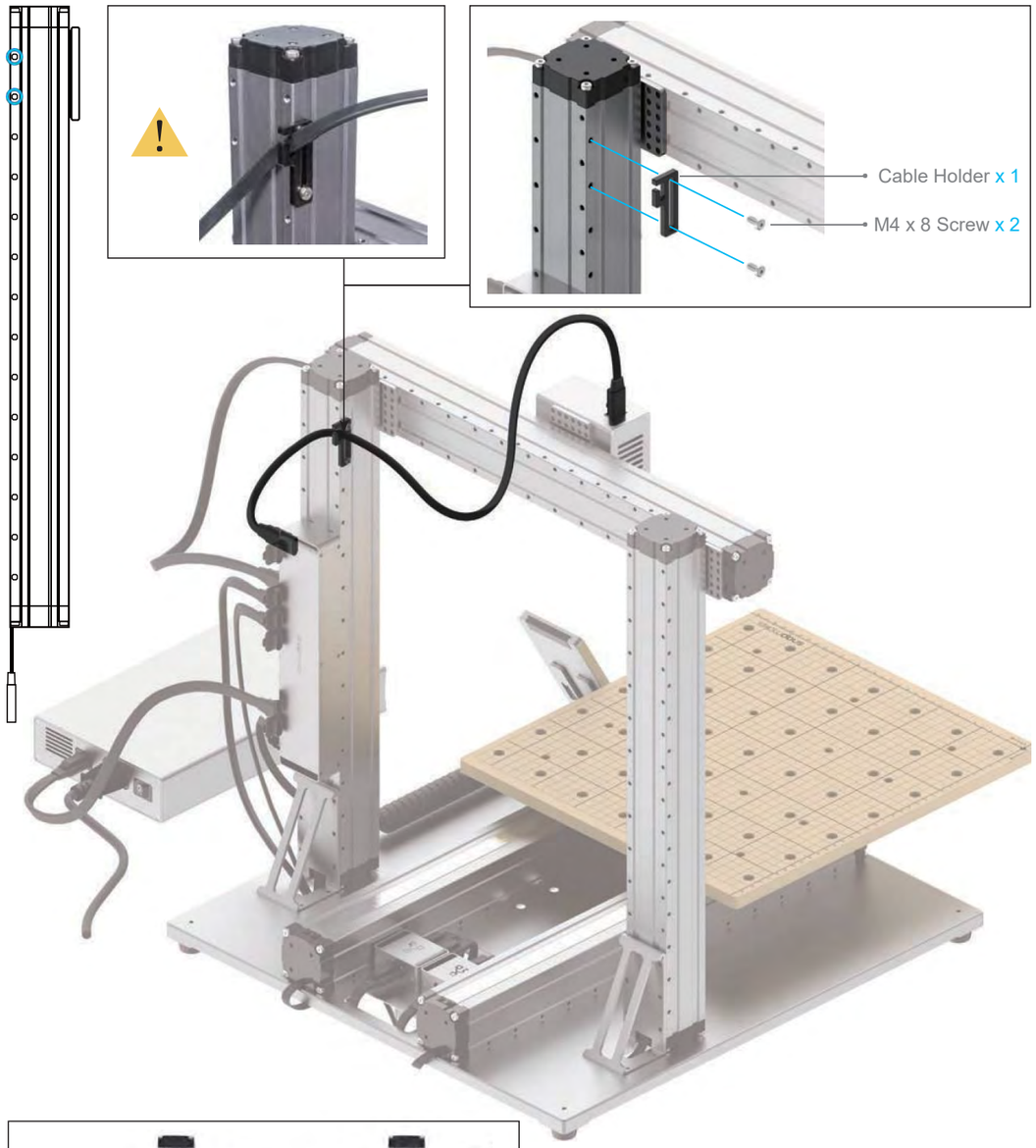

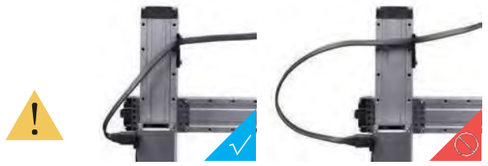

Make sure there is enough cable length for the toolhead for movement.

5.1.2 Initial Setup

Guides & Pictures / Snapmaker

Plug the AC Power Cable into an electrical outlet. Switch the power on and follow the prompts on the touchscreen: Read the Terms -> Name the Machine -> Connect to a Wi-Fi Network.

It is recommended to wait for 5 seconds when you turn your machine off and on again.

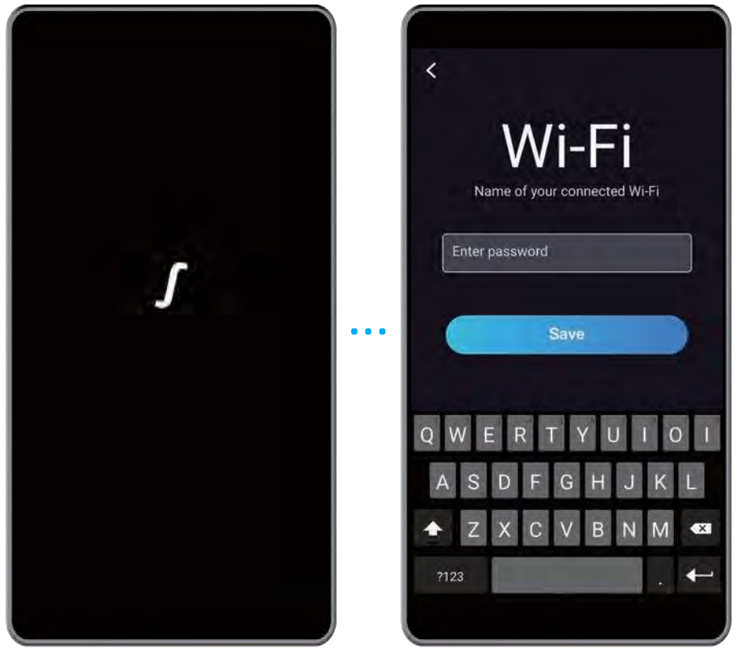

Please skip this step if you have completed the initial setup. If you need to change the settings above, swipe left on the home page of the touchscreen -> select **Settings** -> tap **Wi-Fi** or **About Machine** as needed.

The initial guide, which helps you get started, will appear only once. If you need to launch it again, swipe left on the home page of the touchscreen -> select **Settings** -> tap **Guides**.

5.2.1 Fix the Material

Guides & Pictures / Snapmaker

1. Place the provided material on the center of the CNC carving platform.

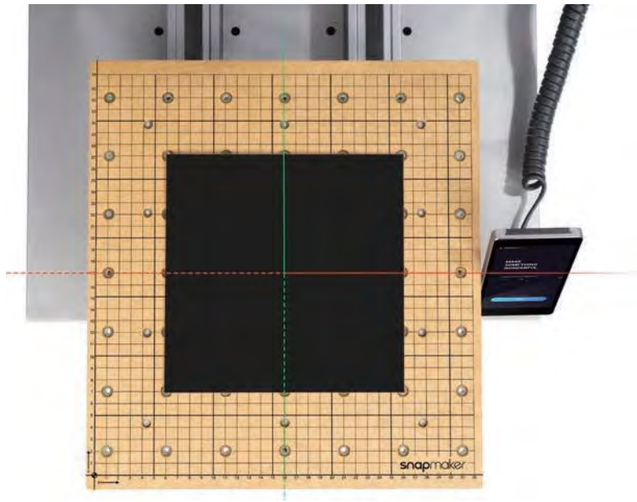

2.Attach the clamp set to the CNC carving platform, then fix the material by screwing the wing nuts.

The size of our provided model is 139.2 x 141.5mm. Make sure the clamp set does not impede the movement of the CNC bit.

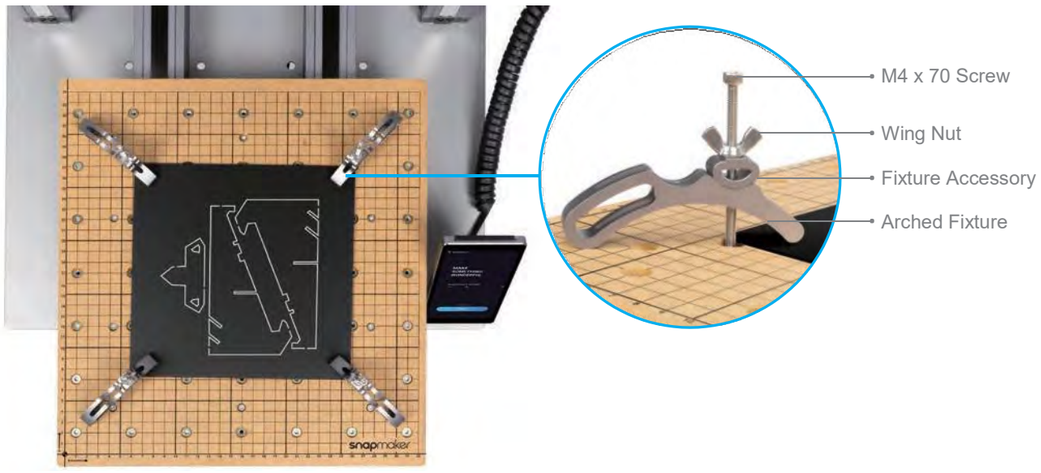

Do not screw the screws through the CNC carving platform.

Make sure the clamp set will not collide with any portions of the machine.

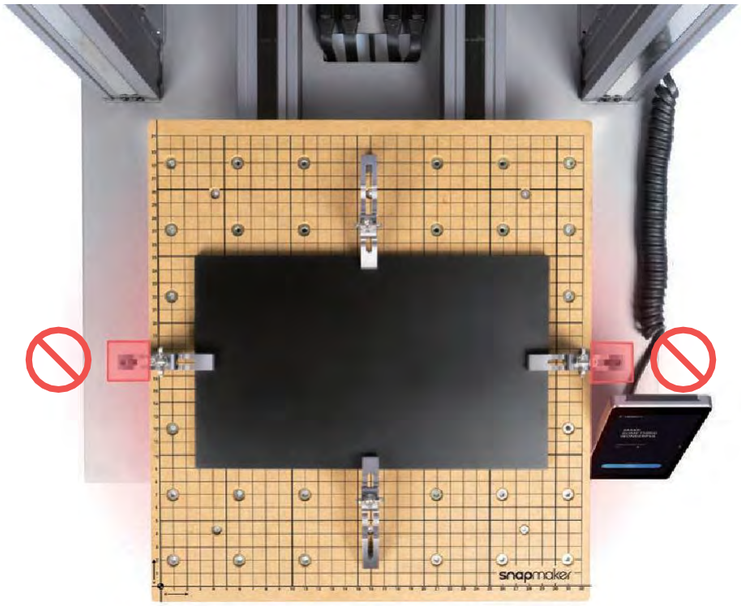

All the three positions as illustrated can be used to fix the material.

5.2.2 Attach the CNC Bit

Guides & Pictures / Snapmaker

How It Works: CNC Bit Usage

Flat End Mill is typically used for slotting or cutting materials into flat surface.

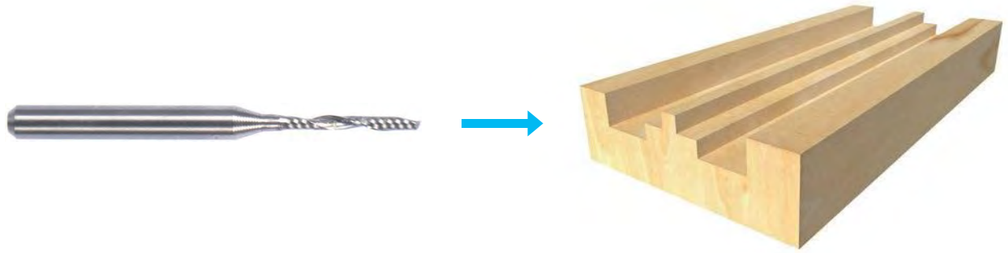

Ball End Mill is typically used for carving materials into curved surface.

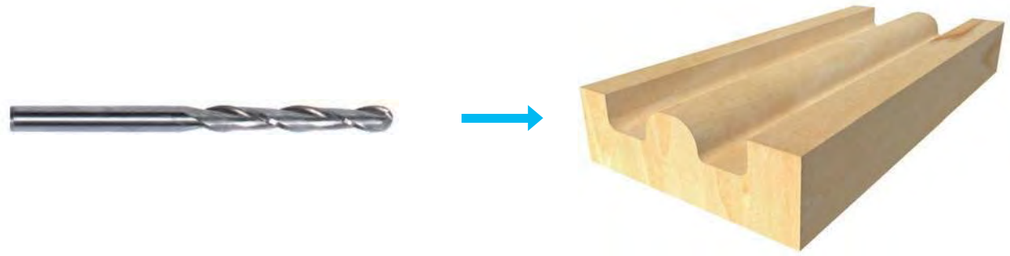

How to Attach the CNC Bit

1. Obliquely insert the ER11 collet into the ER11 nut until it clicks into place.

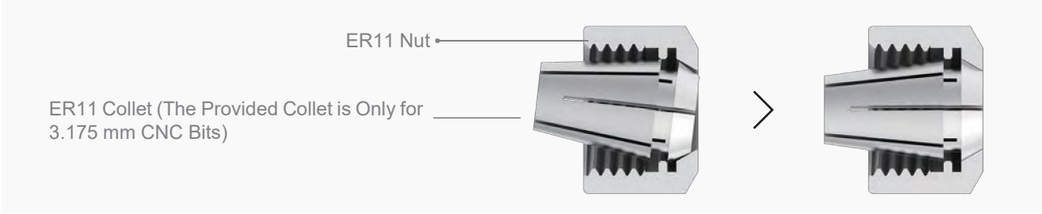

2. Make sure you have worn the CNC Safety Goggles. Insert the CNC bit into the ER11 collet (Flat End Mill is required for our provided model). Make sure the end of the CNC bit is parallel with the edge of the ER11 collet.

Handle the CNC bits carefully and keep them out of reach of children.

3. Screw the entire unit onto the shank as tight as possible, then completely tighten the ER11 nut using the open-end wrenches.

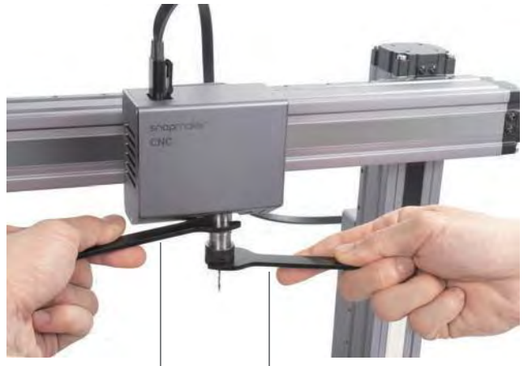

14mm Open-End Wrench

17mm Open-End Wrench

Congratulations!

You are now ready to print. Please continue to generate the G-code file.

5.3.1 Prepare the G-code File

Guides & Pictures / Snapmaker

1. Install the Software and Complete the Initial Setup

Download our software Snapmaker Luban at https://snapmaker.com and install it. Then connect to a Wi-Fi network: Enter the Workspace -> Connection -> Select **Wi-Fi** -> Click -> Select your machine -> Click **Open** -> Tap **Yes** on the touchscreen.

2. Generate the G-code File and Send It to the Machine

① Open the test file from **Case Library** -> ② Click **Process** after configuring the settings in **Configurations** section -> ③ Use the default settings specifically configured for the test file -> ④ Generate the G-code file -> ⑤ Load G-code to **Workspace** -> ⑥ Send G-code to the machine via Wi-Fi.

You can also upload your own files by clicking **Open File** in **Editor** and configure the file settings.

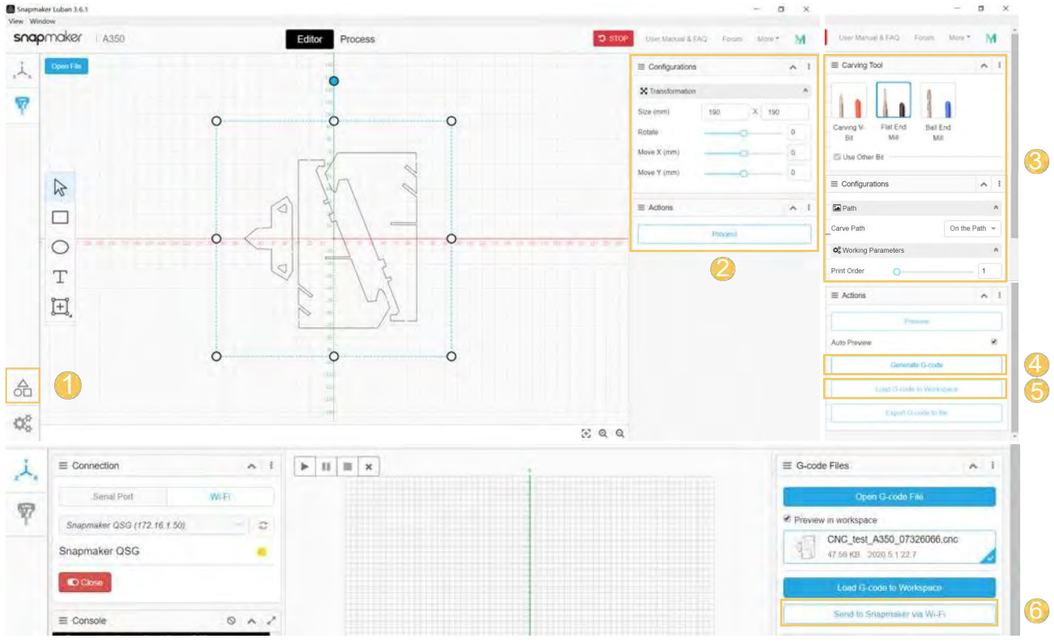

Files sent by Wi-Fi can be found on the touchscreen: **Files** > **Local**.

You can also send the G-code files to the machine via the USB disk. Click **Export G-code to file** in Snapmaker Luban and save it to the USB disk, then insert the USB disk into the controller and select **Files** > **USB** on the touchscreen.

5.3.2 Set the Work Origin and Start Carving

Guides & Pictures / Snapmaker

How It Works: Work Origin

Find out where the carving will be by setting the work origin. The work origin corresponds to the (0, 0) coordinate origin in the software.

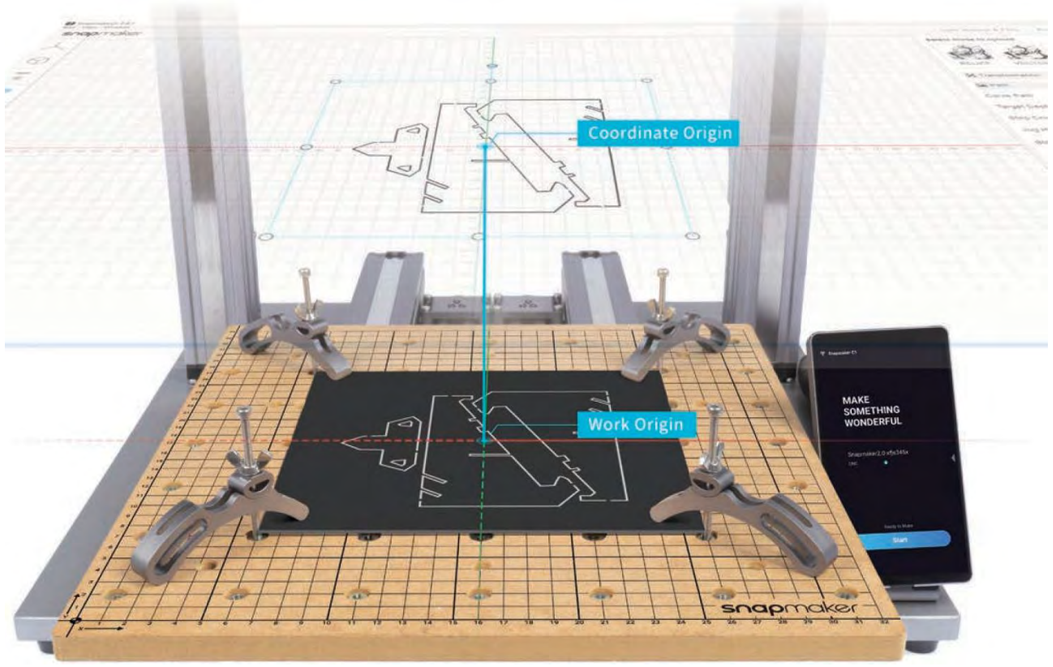

How to Set the Work Origin

1. After receiving the G-code file, tap **Yes** and **Next** on the touchscreen to enter the **Set Work Origin** screen.

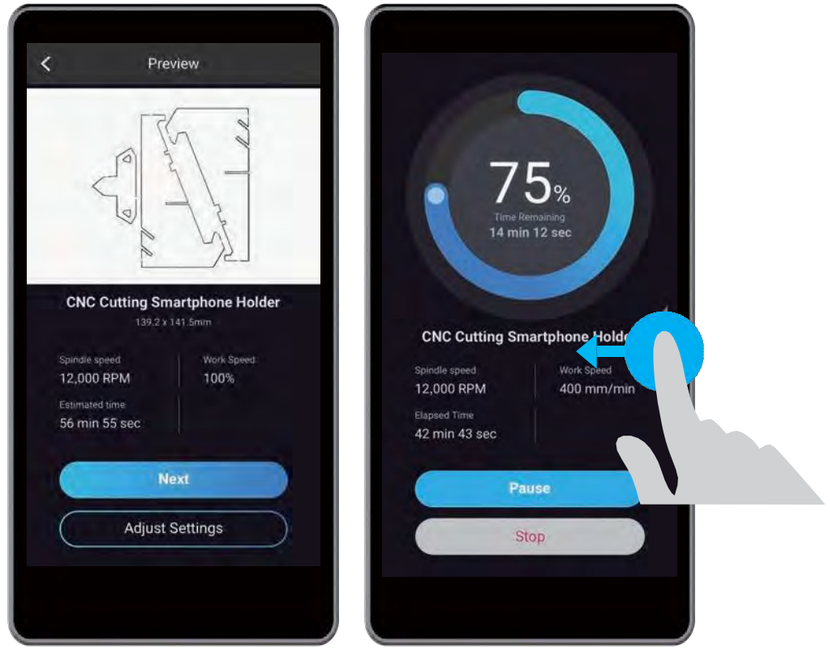

If you need to adjust settings, you can either tap **Adjust Settings** on the **Preview** screen or swipe left on the carving progress screen.

2. Tap **X-/X+/Y-/Y+/Z-/Z+** to move the CNC bit to where the work origin will be (In this case, we set the center of the image as the coordinate origin in the software). Now the CNC bit should be about 5 mm away from the material.

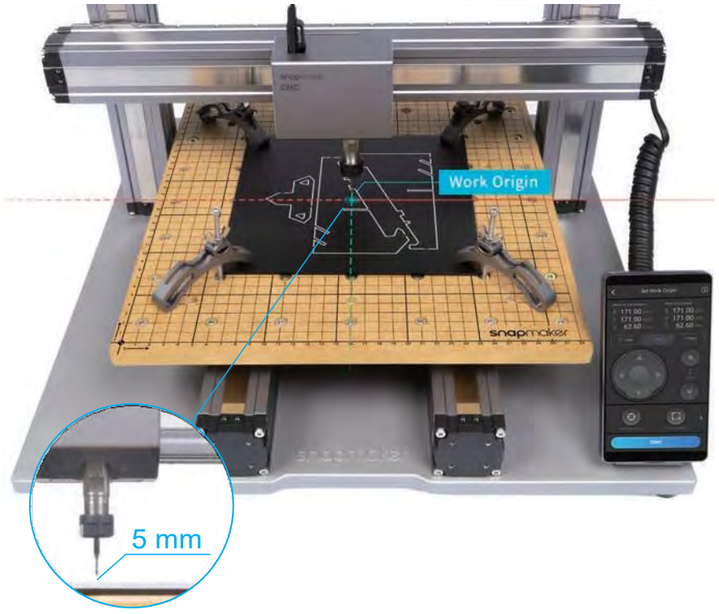

3. Place the calibration card or a piece of A4 paper between the CNC bit and the material. Keep adjusting the height of the CNC bit using **Z-/Z+** buttons until there is slight resistance when you pull out the calibration card, and it should be wrinkled when you push it forward. Tap **Set Work Origin**.

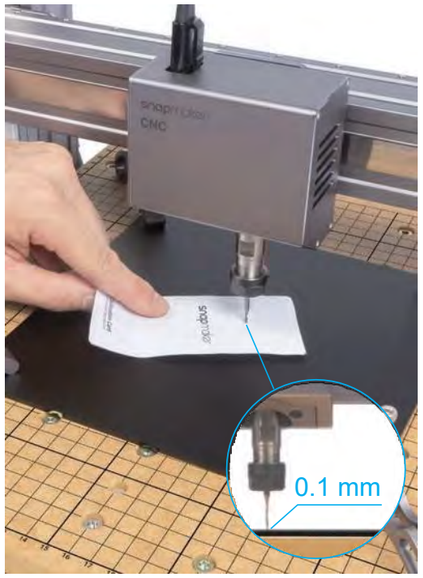

4. Tap **Z+** to lift the CNC bit until it is above the clamp set, then tap **Run Boundary** to check if the work origin is proper. If part of the boundary runs beyond the material or the CNC bit runs into any portions of the machine, reset the work origin and run boundary again.

If you have run boundary with the CNC bit above the clamp set, you can lower the CNC bit to run boundary again as you need.

If the CNC bit runs into any portions of the machine, power off the machine immediately and check if the CNC bit is damaged. Change the CNC bit if it is damaged.

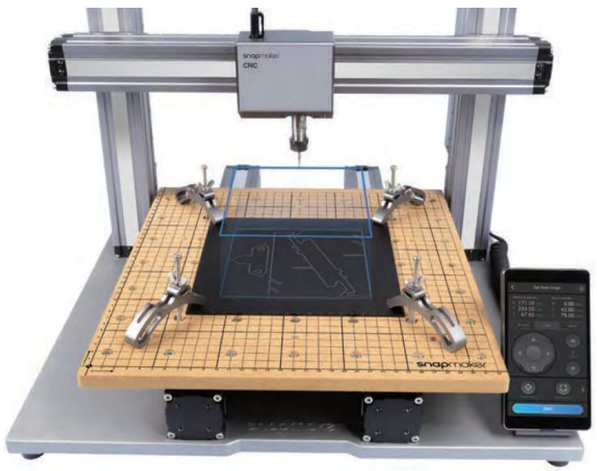

5. Tap **Start** to start carving.

5.3.3 Clean the Finished Work and the Machine

Guides & Pictures / Snapmaker

1. Remove the clamp set from the CNC carving platform.

2. Clean the finished work and the machine using the dust collector, then remove the finished work using the Diagonal Pliers and complete the assembly.

Share!

You can share your finished work in our Facebook group and our forum.

Resources

This guide is subject to change. For the latest version, go to:
https://snapmaker.com

Besides this guide, there is also a User Manual available on our website:
https://snapmaker.com

We are here for you whenever you need general information or technical support:
support@snapmaker.com

For any sales inquiries, you can reach out to us at:
sales@snapmaker.com

You can purchase products in our official online store:
https://shop.snapmaker.com

Share anything you want with other Snapmaker users at our forum:
https://forum.snapmaker.com