FCC Radio Test Report

FCC ID: 2AVE6TG6A

Original Grant

Report No.	:	TBR-C-202403-0336-92
Applicant	:	Tractive GmbH
Equipment Under Test (EUT)		
EUT Name	:	Tractive Dog 6
Model No.	:	TG6A
Series Model No.	:	----
Brand Name	:	Tractive
Sample ID	:	HC-C-202403-0336-01-01# & HC-C-202403-0336-01-04#
Receipt Date	:	2024-06-20
Test Date	:	2024-06-20 to 2024-09-04
Issue Date	:	2024-09-04
Standards	:	FCC Part 2, FCC Part 22 Subpart H, FCC Part 24 Subpart E,
Test Method	:	ANSI/TIAC63.26: 2015
Conclusions	:	**PASS**
		In the configuration tested, the EUT complied with the standards specified above,
		The EUT technically complies with the FCC requirements

Tested By	:	Mike Yan	Mike Yan
Reviewed By	:	Camille Li	Camille Li
Approved By	:	IVAN SU	Ivan Su

This report details the results of the testing carried out on one sample. The results contained in this test report do not relate to other samples of the same product. The manufacturer should ensure that all products in series production are in conformity with the product sample detailed in the report.

Contents

CONTENTS **2**
1. GENERAL INFORMATION ABOUT EUT **6**
1.1 Client Information 6
1.2 General Description of EUT (Equipment Under Test) 6
1.3 Block Diagram Showing the Configuration of System Tested 7
1.4 Description of Support Units 7
1.5 Description of Test Mode 8
1.6 Measurement Uncertainty 10
1.7 Test Facility 10
2. TEST SUMMARY **11**
3. TEST EQUIPMENT AND TEST SITE **12**
4. FREQUENCY STABILITY **14**
4.1 Test Standard and Requirement 14
4.2 Test Setup 14
4.3 Test Procedure 15
4.4 EUT Operating Condition 15
4.5 Deviation From Test Standard 15
4.6 Test Data 15
5. CONDUCTED RF OUTPUT POWER **16**
5.1 Test Standard and Limit 16
5.2 Test Setup 16
5.3 Test Procedure 16
5.4 EUT Operating Condition 16
5.5 Deviation From Test Standard 16
5.6 Test Data 16
6. PEAK-AVERAGE RATIO **17**
6.1 Test Standard and Limit 17
6.2 Test Setup 17
6.3 Test Procedure 17
6.4 EUT Operating Condition 17
6.5 Deviation From Test Standard 17
6.6 Test Data 17

7. RADIATED OUTPUT POWER 18
7.1 Test Standard and Limit 18
7.2 Test Setup 18
7.3 Test Procedure 19
7.4 EUT Operating Condition 19
7.5 Deviation From Test Standard 19
7.6 Test Data 20
8. OCCUPIED BANDWIDTH 21
8.1 Test Standard and Limit 21
8.2 Test Setup 21
8.3 Test Procedure 21
8.4 EUT Operating Condition 22
8.5 Deviation From Test Standard 22
8.6 Test Data 22
9. CONDUCTED OUT OF BAND EMISSIONS 23
9.1 Test Standard and Limit 23
9.2 Test Setup 23
9.3 Test Procedure 23
9.4 EUT Operating Condition 23
9.5 Deviation From Test Standard 23
9.6 Test Data 23
10. BAND EDGE TEST 24
10.1 Test Standard and Limit 24
10.2 Test Setup 24
10.3 Test Procedure 24
10.4 EUT Operating Condition 24
10.5 Deviation From Test Standard 24
10.6 Test Data 24
11. RADIATED OUT BAND OF EMISSIONS 25
11.1 Test Standard and Limit 25
11.2 Test Setup 25
11.3 Test Procedure 25
11.4 EUT Operating Condition 26
11.5 Deviation From Test Standard 26
11.6 Test Data 26

ATTACHMENT A-- RADIATED OUTPUT POWER.....27

Revision History

Report No.	Version	Description	Issued Date
TBR-C-202403-0336-92	Rev.01	Initial issue of report	2024-09-04

1. General Information about EUT

1.1 Client Information

Applicant	:	Tractive GmbH
Address	:	Poststrasse 4, 4061 Pasching, AUSTRIA
Manufacturer	:	Tractive GmbH
Address	:	Poststrasse 4, 4061 Pasching, AUSTRIA

1.2 General Description of EUT (Equipment Under Test)

EUT Name	:	Tractive Dog 6	
Models No.	:	TG6A	
Model Different	:	----	
Product Description	:	FCC Operating Frequency:	GSM 850: 824.20MHz-848.80MHz PCS1900: 1850.20MHz-1909.80MHz
		Antenna Gain:	FPC antenna: -5.5dBi for GSM850 -0.2dBi for GSM1900
		Modulation Type:	GPRS: GMSK EDGE: 8PSK
Power Rating	:	Input: DC 5V/1A	
Li-ion Polymer Battery	:	DC 3.87V by 930mAh Rechargeable Li-ion battery	
Software Version	:	TRV6-005	
Hardware Version	:	v.5	

Remark:

(1) The antenna gain provided by the applicant, the verified for the RF conduction test provided by TOBY test lab.

(2) The above antenna information is declared by manufacturer and for more detailed features description, please refer to the manufacturer's specifications, the laboratory shall not be held responsible.

Note:

For a more detailed features description, please refer to the manufacturer’s specifications or the User’s Manual.

1.3 Block Diagram Showing the Configuration of System Tested

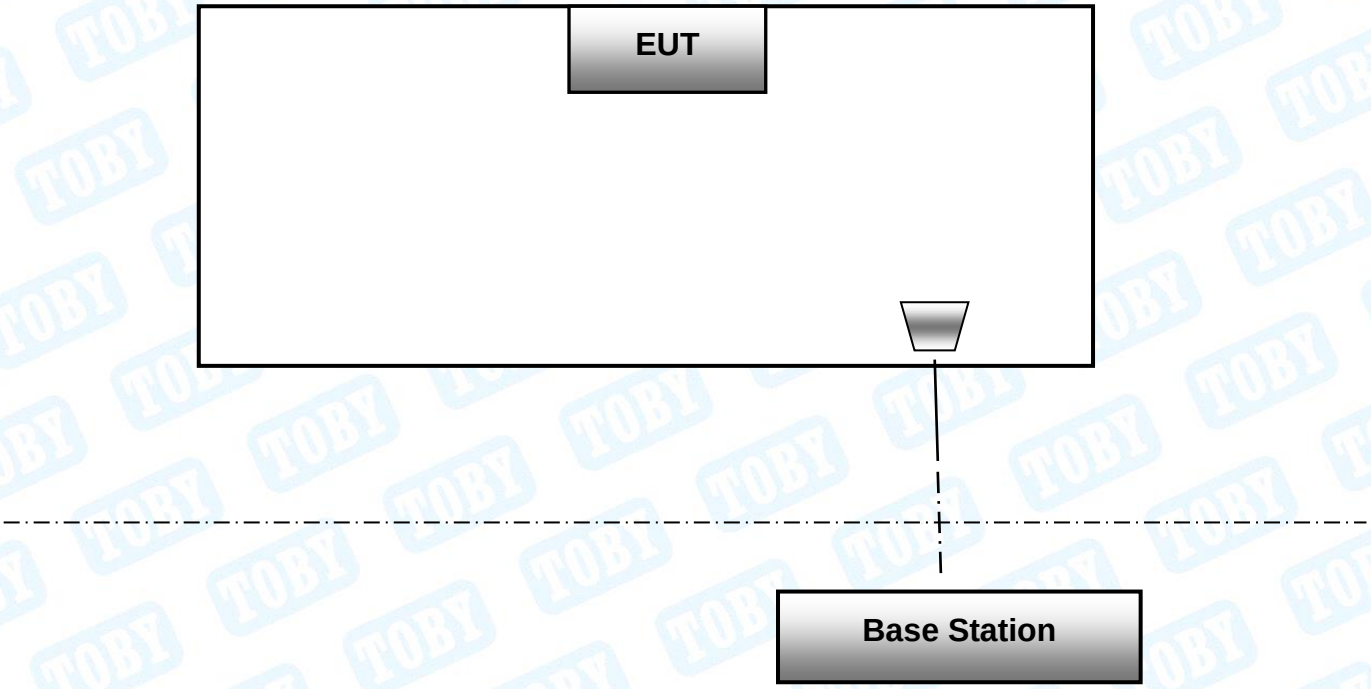

The above block diagram of setup is the normal mode. And more detail please refer to the test setup of each test item of bellow.

1.4 Description of Support Units

The EUT has been tested as an independent unit.

1.5 Description of Test Mode

To investigate the maximum EMI emission characteristics generates from EUT, the test system was pre-scanning tested base on the consideration of following EUT operation mode or test configuration mode which possible have effect on EMI emission level. Each of these EUT operation mode(s) or test configuration mode(s) mentioned follow was evaluated respectively.

During all testing, EUT is link mode with base station at maximum power level. The spurious emission measurements were carried out in semi-anechoic chamber with 3-meter test range. Frequency range investigated for radiated emission as below：

1. 9kHz~10GHz for GSM850 and UMTS Band V.
2. 9kHz~20GHz for PCS1900 and UMTS Band II/IV.

Test Channel		
Mode	**Channel**	**Frequency(MHz)**
GSM 850	128	824.20
	190	836.60
	251	848.80
PCS 1900	512	1850.20
	661	1880.00
	810	1909.80

Test Mode	Description
GPRS 850	highest , middle, lowest channels
EGPRS 850	highest , middle, lowest channels
GPRS 1900	highest , middle, lowest channels
EGPRS 1900	highest , middle, lowest channels

Note:

(1) The measurements are performed at the highest, middle, lowest available channels.

(2) During the testing procedure, the EUT is in link mode with base station emulator at maximum power level in each test mode.

(3) The EUT has GSM, GPRS, EDGE functions, and after pre-testing, GSM function is the worst case for all the emission tests.

(4) The EUT has RMC, HSDPA, HSUPA functions in UMTS band II and UMTS band V, and after pre-testing, RMC mode is the worst case for all the emission tests.

(5) The EUT is considered a portable unit; it was pre-tested on the positioned of each 3 axis, X-plane, Y-plane and Z-plane. The worst case was found positioned on Z-plane as the normal use. Therefore only the test data of this Z-plane was used for radiated emission measurement test.

1.6 Measurement Uncertainty

Test Item	Parameters	Expanded Uncertainty (U_{Lab})
Radiated Emission	Level Accuracy: 9kHz to 30 MHz	±4.60 dB
Radiated Emission	Level Accuracy: 30MHz to 1000 MHz	±4.50 dB
Radiated Emission	Level Accuracy: Above 1000MHz	±4.20 dB

1.7 Test Facility

The testing report were performed by the Shenzhen Toby Technology Co., Ltd., in their facilities located at 1/F., Building 6, Rundongsheng Industrial Zone, Longzhu, Xixiang, Bao'an District, Shenzhen, Guangdong, China. At the time of testing, the following bodies accredited the Laboratory:

CNAS (L5813)

The Laboratory has been accredited by CNAS to ISO/IEC 17025: 2017 General Requirements for the Competence of Testing and Calibration Laboratories for the competence in the field of testing. And the Registration No.: CNAS L5813.

A2LA Certificate No.: 4750.01

The laboratory has been accredited by American Association for Laboratory Accreditation(A2LA) to ISO/IEC 17025：2017 General Requirements for the Competence of Testing and Calibration Laboratories for the technical competence in the field of Electrical Testing. And the A2LA Certificate No.: 4750.01.FCC Accredited Test Site Number: 854351. Designation Number: CN1223.

IC Registration No.: (11950A)

The Laboratory has been registered by Certification and Engineering Bureau of Industry Canada for radio equipment testing. The site registration: Site# 11950A. CAB identifier: CN0056.

2. Test Summary

Test Standards and Test Results			
Standard	**Document Title**		
FCC Part 2 (10-1-05 Edition)	Frequency Allocations and Radio Treaty Matters; General Rules and Regulations		
FCC Part 22 10-1-05 Edition)	Public Mobile Services		
FCC Part 24 (10-1-05 Edition)	Personal Communications Services		
Standard Section	**Test Item**	**Judgment**	**Remark**
2.1046	Conducted RF Output Power	PASS	N/A
24.232(d)	Peak-Average Ratio	PASS	N/A
2.1049; 22.917; 24.238	99% & -26 dB Occupied Bandwidth	PASS	N/A
2.1055; 22.355; 24.235;	Frequency Stability	PASS	N/A
2.1051; 2.1057; 22.917; 24.238	Conducted Out of Band Emissions	PASS	N/A
2.1051; 2.1057; 22.917; 24.238	Band Edge	PASS	N/A
22.913; 24.238	Transmitter Radiated Power (EIRP/ERP)	PASS	N/A
2.1051; 2.1057; 22.917; 24.238	Radiated Out of Band Emissions	PASS	N/A
Note: N/A is an abbreviation for Not Applicable.			

3. Test Equipment and Test Site

Test Site				
No.	**Test Site**	**Manufacturer**	**Specification**	**Used**
TB-EMCSR001	Shielding Chamber #1	YIHENG	7.5*4.0*3.0（m）	×
TB-EMCSR002	Shielding Chamber #2	YIHENG	8.0*4.0*3.0（m）	√
TB-EMCCA001	3m Anechoic Chamber #A	ETS	9.0*6.0*6.0（m）	×
TB-EMCCB002	3m Anechoic Chamber #B	YIHENG	9.0*6.0*6.0（m）	√

Radiation Emission Test (B Site)					
Equipment	**Manufacturer**	**Model No.**	**Serial No.**	**Last Cal.**	**Cal. Due Date**
Spectrum Analyzer	Agilent	N9020A	MY49100060	Aug. 29, 2024	Aug. 28, 2025
Spectrum Analyzer	Rohde & Schwarz	FSV40-N	102197	Jun. 17, 2024	Jun. 16, 2025
EMI Test Receiver	Rohde & Schwarz	ESU-8	100472/008	Feb. 23, 2024	Feb.22, 2025
Bilog Antenna	SCHWARZBECK	VULB 9168	1225	Nov. 13, 2023	Nov. 12, 2025
Horn Antenna	SCHWARZBECK	BBHA 9120 D	2463	Jun. 14, 2024	Jun. 13, 2026
Horn Antenna	SCHWARZBECK	BBHA 9170	1118	Feb. 27, 2024	Feb.26, 2026
Loop Antenna	SCHWARZBECK	FMZB 1519 B	1519B-059	Jun. 14, 2024	Jun. 13, 2026
HF Amplifier	Tonscend	TAP9E6343	AP21C806117	Aug. 29, 2024	Aug. 28, 2025
HF Amplifier	Tonscend	TAP051845	AP21C806141	Aug. 29, 2024	Aug. 28, 2025
HF Amplifier	Tonscend	TAP0184050	AP21C806129	Aug. 29, 2024	Aug. 28, 2025
Highpass Filter	CD	HPM-6.4/18G	---	N/A	N/A
Highpass Filter	CD	HPM-2.8/18G	---	N/A	N/A
Highpass Filter	XINBO	XBLBQ-HTA67(8-25G)	22052702-1	N/A	N/A
Antenna Conducted Emission					
Equipment	**Manufacturer**	**Model No.**	**Serial No.**	**Last Cal.**	**Cal. Due Date**
Spectrum Analyzer	Rohde & Schwarz	FSV40-N	102197	Jun. 17, 2024	Jun. 16, 2025
MXA Signal Analyzer	KEYSIGHT	N9020B	MY60110172	Aug. 29, 2024	Aug. 28, 2025
MXA Signal Analyzer	Agilent	N9020A	MY47380425	Aug. 29, 2024	Aug. 28, 2025
Vector Signal Generator	Agilent	N5182A	MY50141294	Aug. 29, 2024	Aug. 28, 2025
Analog Signal Generator	Agilent	N5181A	MY48180463	Aug. 29, 2024	Aug. 28, 2025
Vector Signal Generator	KEYSIGHT	N5182B	MY59101429	Aug. 29, 2024	Aug. 28, 2025
Analog Signal Generator	KEYSIGHT	N5173B	MY61252685	Aug. 29, 2024	Aug. 28, 2025
RF Power Sensor	DARE!! Instruments	RadiPowerRPR3006W	17I00015SNO26	Aug. 29, 2024	Aug. 28, 2025
	DARE!! Instruments	RadiPowerRPR3006W	17I00015SNO29	Aug. 29, 2024	Aug. 28, 2025
	DARE!! Instruments	RadiPowerRPR3006W	17I00015SNO31	Aug. 29, 2024	Aug. 28, 2025

	DARE!! Instruments	RadiPowerRPR3006W	17I00015SNO33	Aug. 29, 2024	Aug. 28, 2025
RF Control Unit	Tonsced	JS0806-1	21C8060380	N/A	N/A
RF Control Unit	Tonsced	JS0806-2	21F8060439	Aug. 29, 2024	Aug. 28, 2025
Power Control Box	Tonsced	JS0806-4ADC	21C8060387	N/A	N/A
Wideband Radio Comunication Tester	Rohde & Schwarz	CMW500	144382	Aug. 29, 2024	Aug. 28, 2025
Universal Radio Communication Tester	Rohde&Schwarz	CMW500	168796	Feb. 23, 2024	Feb.22, 2025
Temperature and Humidity Chamber	ZhengHang	ZH-QTH-1500	ZH2107264	Jun. 14, 2024	Jun. 13, 2026

4. Frequency Stability

4.1 Test Standard and Requirement

4.1.1 Test Standard

FCC Part 2.1055

FCC Part 22.355

FCC Part 24.235

4.1.2 Requirement

According to FCC section 22.355 and FCC section 24.235, the frequency stability shall be sufficient to ensure that the fundamental emission stays within the authorized frequency block. According to FCC section 2.1055, the test conditions are:

(1) Temperature:

The temperature is varied from -30℃ to +50℃ at intervals of not more than 10℃.

(2) Primary Supply Voltage:

For hand carried battery powered equipment, the primary supply voltage is reduced to the battery operating end point which shall be specified by the manufacture. The supply voltage shall be measured at input to the cable normally provide with the equipment, or at the power supply terminals if cables are not normally provided.

4.2 Test Setup

For Temperature Test:

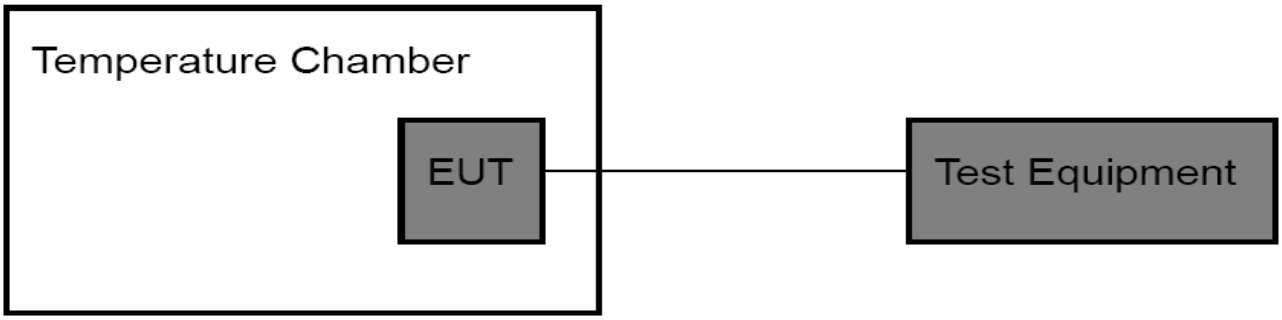

For Voltage Test:

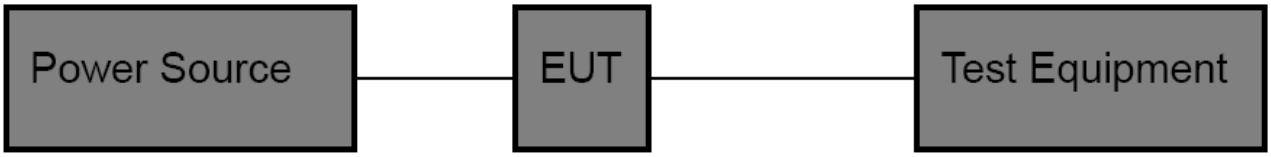

4.3 Test Procedure

Test Procedures for Temperature Variation:

(1) The EUT was set up in the thermal chamber and connected with the base station.

(2) With power off, the temperature was decreased to -30℃ and the EUT was stabilized for three hours. Power was applied and the maximum change in frequency was recorded within one minute.

(3) With power off, the temperature was raised in 10℃ set up to 50℃ and the EUT was stabilized for three hours. Power was applied and the maximum change in frequency was recorded within one minute.

(4) If the EUT cannot be turned on at -30℃, the testing lowest temperature will be raised in 10℃ step until the EUT can be turned on.

Test Procedures for Voltage Variation:

(1) The EUT was placed in a temperature chamber at 25±5℃ and connected with the base station.

(2) Reduce the input voltage to specify extreme voltage variation (+/- 15%) and endpoint, record the maximum frequency change.

(3) The variation in frequency was measured for the worst case.

4.4 EUT Operating Condition

The Equipment Under Test was set to Communication with the Base Station.

4.5 Deviation From Test Standard

No deviation

4.6 Test Data

Please refer to the Appendix C Test Data - **Frequency Stability**.

5. Conducted RF Output Power

5.1 Test Standard and Limit

5.1.1 Test Standard

FCC Part 2: 2.1046

FCC Part 22H : 22.913 (a)

FCC Part 24E: 24.232 (c)

5.1.2 Test Limit

GSM850/UMTS Band V	UMTS Band IV	PCS 1900/UMTS Band II
38.5 dBm (ERP)	30 dBm (EIRP)	33 dBm (EIRP)

5.2 Test Setup

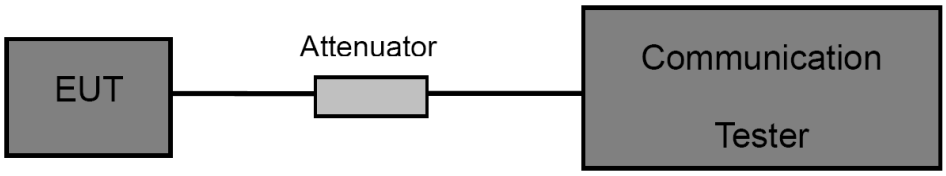

5.3 Test Procedure

(1) The EUT is coupled to the Base Station with the suitable Attenuator, the path loss is calibrated to correct the reading.

(2) A call is set up by the Base Station to the generic call set up procedure.

(3) Set EUT at maximum power level through base station by power level command.

(4) Then read record the power value from the Base Station in dBm.

5.4 EUT Operating Condition

The EUT was continuously connected with the Base station and transmitting in the max power during the test.

5.5 Deviation From Test Standard

No deviation

5.6 Test Data

Please refer to the Appendix C Test Data - **Conducted RF Output Power.**

6. Peak-Average Ratio

6.1 Test Standard and Limit

6.1.1 Test Standard

FCC Part 24E: 24.232 (d)

6.1.2 Test Limit

Peak-to-Average Ratio
The peak-to-average ratio (PAR) of the transmission may not exceed 13 dB.

6.2 Test Setup

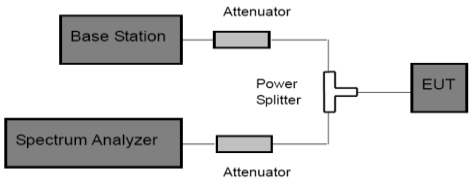

6.3 Test Procedure

According with KDB 971168

(1) The signal analyzer's CCDF measurement profile is enabled.

(2) Frequency = carrier center frequency.

(3) Measurement BW>Emission bandwidth of signal.

(4) The signal analyzer was set to collect one million samples to generate the CCDF curve.

(5) The measurement interval was set depending on the type of signal analyzed. For continuous signals (>98% duty cycle), the measurement interval was set to 1ms. For burst transmissions, the spectrum analyzer is set to use an internal "RF Burst" trigger that is synced with an incoming pulse and the measurement interval is set to less than the duration of the "on time" of one burst to ensure that energy is only captured during a time in which of the transmitter is operating at maximum power.

6.4 EUT Operating Condition

The EUT was continuously connected with the Base station and transmitting in the max power during the test.

6.5 Deviation From Test Standard

No deviation

6.6 Test Data

Please refer to the Appendix C Test Data - **Peak-to-Average Ratio.**

7. Radiated Output Power

7.1 Test Standard and Limit

7.1.1 Test Standard

FCC Part 22H: 22.913 (a)

FCC Part 24E: 24.232 (c)

7.1.2 Test Limit

According to FCC Part 22.913 (a), the ERP of Cellular mobile transmitters must not exceed 7 Watts(38.5 dBm).

According to FCC Part 24.232 (c), the Mobile/portable stations are limited to 2 Watts(33 dBm) EIRP peak power.

According to FCC Part 27.50 (d)(4),Fixed, mobile, and portable (hand-held) stations operating in the 1710-1755 MHz band and mobile and portable stations operating in the 1695-1710 MHz and 1755-1780 MHz bands are limited to 1 watt EIRP. Fixed stations operating in the 1710-1755 MHz band are limited to a maximum antenna height of 10 meters above ground. Mobile and portable stations operating in these bands must employ a means for limiting power to the minimum necessary for successful communications.

GSM850/UMTS Band V	UMTS Band IV	PCS 1900/UMTS Band II
38.5 dBm (ERP)	30 dBm (EIRP)	33 dBm (EIRP)

7.2 Test Setup

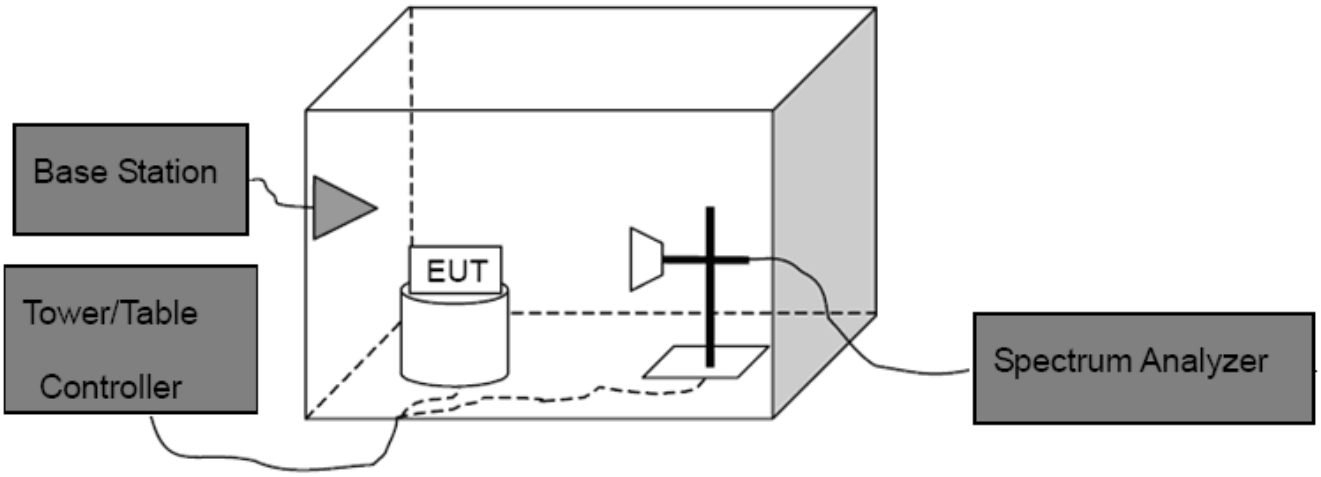

Above 1G

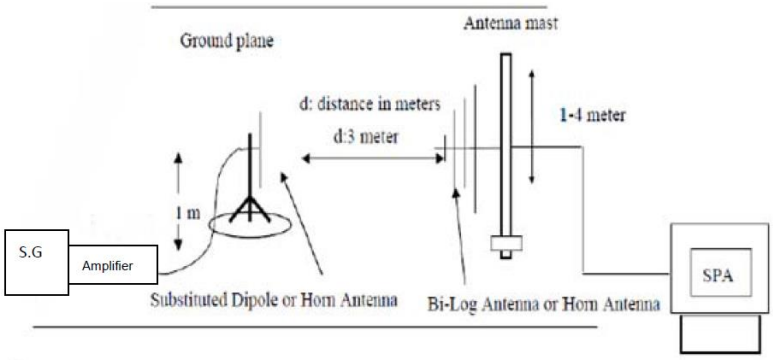

Substituted Method

7.3 Test Procedure

(1) The EUT was placed on an non-conductive rotating platform with 0.8 meter height in an anechoic chamber. The radiated emission at the fundamental frequency was measured at 3 m with a test antenna and a spectrum analyzer with RBW=3 MHz, VBW=3 MHz and peak detector settings.

(2) During the measurement, the EUT was enforced in maximum power and linked with the Base Station. The highest was recorded from analyzer power level (LVT) from the 360 degrees rotation of the turntable and the test antenna raised and lowered over a range from 1 to 4 meters in both horizontally and vertically polarized orientations.

(3) Effective Isotropic Radiated Power (EIRP) was measured by substitution method according to C63.26. The EUT was replaced by dipole antenna (for frequency below 1 GHz) or Horn antenna (for frequency above 1 GHz) at same location with same polarize of receiver antenna and then a known power of each measure frequency from S.G. was applied into the dipole antenna or Horn antenna through a TX cable, and then recorded the maximum Analyzer reading through raised and lowered the test antenna.

Note: In test, the S.G Connect the Pre-amplifier(Sonoma 310N Pre-amplifier for frequency below 1 GHz, HP 8449B Pre-amplifier for frequency above 1 GHz)

Then the EUT's EIRP and ERP was calculated with the correction factor:

ERP=S.G.Level +Antenna Gain Cord.(dBd)-Cable Loss(dB)

EIRP=S.G.Level+Antenna Gain Cord.(dBi)-Cable Loss(dB)

7.4 EUT Operating Condition

The EUT was continuously connected with the Base station and transmitting in the max power during the test.

7.5 Deviation From Test Standard

No deviation

7.6 Test Data

Please refer to the Attachment A.

8. Occupied Bandwidth

8.1 Test Standard and Limit

8.1.1 Test Standard

FCC Part 2: 2.1049

8.1.2 Test Requirement

According to FCC section 2.1049, the occupied bandwidth is the frequency bandwidth such that below its lower and above its upper frequency limits, the mean powers radiated are each equal to 0.5 percent of the total mean power radiated by a given emission.

Occupied bandwidth is also known as 99% power and -26dBC occupied bandwidths.

8.2 Test Setup

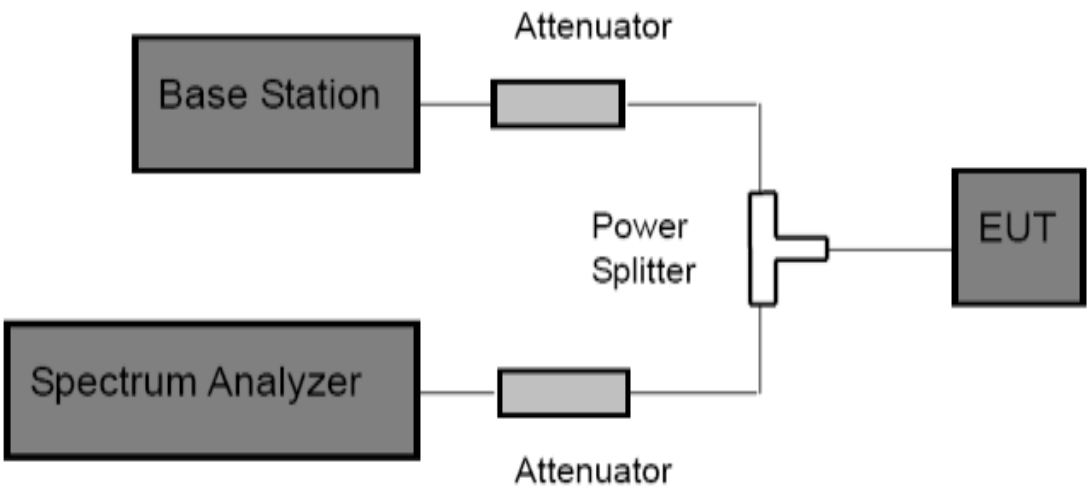

8.3 Test Procedure

(1) The EUT was directly connected to the spectrum analyzer and Base station via power splitter as show in the block diagram above.

(2) The resolution bandwidth of the Spectrum Analyzer is set to at least 1% of the occupied bandwidth.

(3) The low, middle and the high channels are selected to perform tests respectively.

(4) Set the frequency range of the Spectrum Analyzer suitably to capture the waveform; search peak; make a line whose value is 26dB lower than the peak; mark two points which the line intersected the waveform at; finally record the delta of the two points as the occupied bandwidth and the plot.

(5) Set the Spectrum Analyzer Occupied bandwidth function to measure the 99% occupied bandwidth.

8.4 EUT Operating Condition

The EUT was continuously connected with the Base station and transmitting in the max power during the test.

8.5 Deviation From Test Standard

No deviation

8.6 Test Data

Please refer to the Appendix C Test Data - **26dB Bandwidth and Occupied Bandwidth.**

9. Conducted Out of Band Emissions

9.1 Test Standard and Limit

9.1.1 Test Standard

FCC Part 2: 2.1051, 2.1057

FCC Part 22H: 22.917(a)

FCC Part 24E: 24.238(a)

9.1.2 Test Limit

The power of any emission outside of the authorized operating frequency ranges must be attenuated below the transmitting power(P) by a factor of at least 43+10log(P) dB. For all power levels +30 dBm to 0 dBm, this becomes a constant specification limit of -13 dBm.

9.2 Test Setup

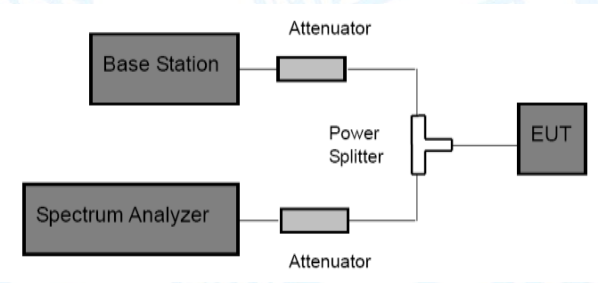

9.3 Test Procedure

(1) The EUT was directly connected to the spectrum analyzer and Base station via power splitter as show in the block diagram above.

(2) Spectrum Setting:

Frequency bellow 1 GHz: RBW=100 kHz, VBW=300 kHz.

Frequency above 1 GHz: RBW=1 MHz, VBW=3 MHz.

(3) The low, middle and high channels of each band and mode's spurious emissions for 30 MHz to 10th Harmonic were measured by Spectrum analyzer.

9.4 EUT Operating Condition

The EUT was continuously connected with the Base station and transmitting in the max power during the test.

9.5 Deviation From Test Standard

No deviation

9.6 Test Data

Please refer to the Appendix C Test Data - **Conducted Spurious Emission.**

10. Band Edge Test

10.1 Test Standard and Limit

10.1.1 Test Standard

FCC Part 2: 2.1051, 2.1057

FCC Part 22H: 22.917(a)

FCC Part 24E: 24.238(a)

10.1.2 Test Limit

The power of any emission outside of the authorized operating frequency ranges must be attenuated below the transmitting power(P) by a factor of at least 43+10log(P) dB. For all power levels +30 dBm to 0 dBm, this becomes a constant specification limit of -13 dBm.

10.2 Test Setup

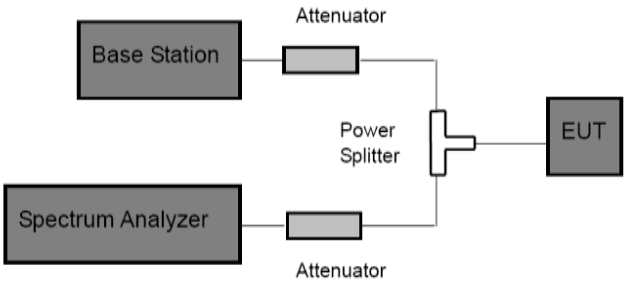

10.3 Test Procedure

(1) The EUT was directly connected to the spectrum analyzer and Base station via power splitter as show in the block diagram above.

(2) Spectrum Setting:

GSM and PCS: RBW⩾1% 26db bandwidth, VBW=3 RBW, Span 1 MHz, Detector: Peak Mode.

WCDMA: RBW⩾1% 26db bandwidth, VBW=3 RBW, Span 10 MHz, Detector: Peak Mode.

(3) The band edges of low and high channels for the highest RF powers were measured.

10.4 EUT Operating Condition

The EUT was continuously connected with the Base station and transmitting in the max power during the test.

10.5 Deviation From Test Standard

No deviation

10.6 Test Data

Please refer to the Appendix C Test Data - **Band Edge.**

11. Radiated Out Band of Emissions

11.1 Test Standard and Limit

11.1.1 Test Standard

FCC Part 2: 2.1053, 2.1057

FCC Part 22H: 22.917

FCC Part 24E: 24.238

11.1.2 Test Limit

The power of any emission outside of the authorized operating frequency ranges must be attenuated below the transmitting power(P) by a factor of at least 43+10log(P) dB. For all power levels +30 dBm to 0 dBm, this becomes a constant specification limit of -13 dBm.

11.2 Test Setup

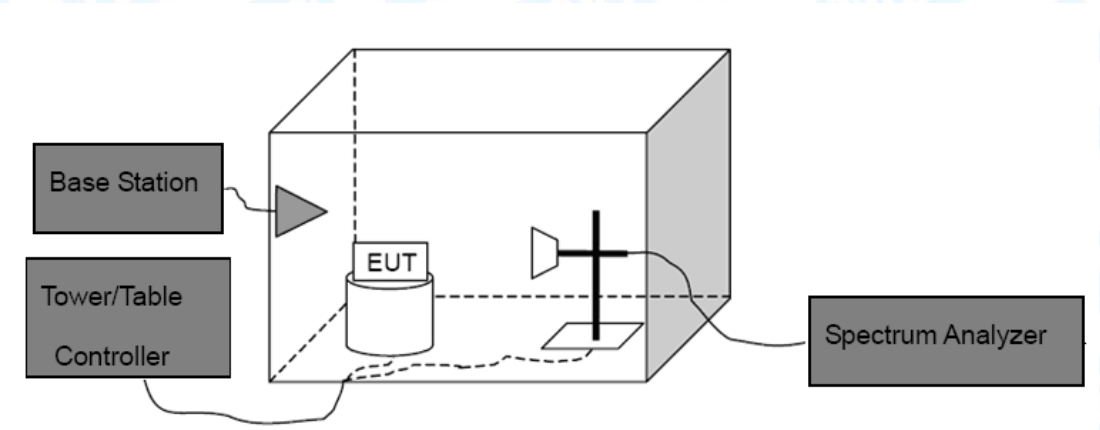

11.3 Test Procedure

(1) The test system setup as show in the block diagram above.

(2) The EUT was placed on an non-conductive rotating platform in an anechoic chamber. The radiated spurious emissions from 30MHz to 10th harmonious of fundamental frequency were measured at 3 m with a test antenna and a spectrum analyzer with RBW=1 MHz, VBW=1 MHz, peak detector settings.

(3) During the measurement, the EUT was enforced in maximum power and linked with a base station. All the spurious emissions at 3m were measured by rotation of the turntable and the test antenna raised and lowered over a range from 1 to 4 meters in both horizontally and vertically polarized orientations.

(4) When found the maximum level of emissions from the EUT. Remove the EUT and replace it with substitution antenna. A signal generator was connected to the substitution antenna by a non-radiating cable. The absolute levels of the spurious emissions were measured by the substitution.

Spurious emissions in dB=10 log(TX power in Watts/0.001)-the absolute level

Spurious attenuation limit in dB=43+10 log(power out in Watts)

11.4 EUT Operating Condition

The EUT was continuously connected with the Base station and transmitting in the max power during the test.

11.5 Deviation From Test Standard

No deviation

11.6 Test Data

Please refer to the Attachment B.

Attachment A-- Radiated Output Power

GSM 850							
Mode	Channel	Frequency (MHz)	Antenna (H&V)	SG Level (dBm)	Antenna Factor (dBd)	Cable Loss (dB)	ERP Power (dBm)
GPRS 850 (1 Slot)	128	824.2	H	18.31	3.46	1.26	20.51
			V	20.80	3.46	1.26	23.00
	190	836.6	H	17.37	3.82	1.26	19.93
			V	18.08	3.82	1.26	20.64
	251	848.8	H	17.61	4.16	1.26	20.51
			V	20.02	4.16	1.26	22.92
EDGE 850 (1 Slot)	128	824.2	H	16.02	3.46	1.26	18.22
			V	20.44	3.46	1.26	22.64
	190	836.6	H	16.55	3.82	1.26	19.11
			V	16.06	3.82	1.26	18.62
	251	848.8	H	16.72	4.16	1.26	19.62
			V	19.60	4.16	1.26	22.50
Limit							**38.5**

PCS 1900							
Mode	Channel	Frequency (MHz)	Antenna (H&V)	SG Level (dBm)	Antenna Factor (dBi)	Cable Loss (dB)	EIRP Power (dBm)
GPRS 1900 (1 Slot)	512	1850.2	H	17.49	3.46	1.26	19.69
			V	17.46	3.46	1.26	19.66
	661	1880.0	H	19.97	3.82	1.26	22.53
			V	18.37	3.82	1.26	20.93
	810	1909.8	H	17.30	4.16	1.26	20.20
			V	21.79	4.16	1.26	24.69
EDGE 1900 (1 Slot)	512	1850.2	H	16.84	3.46	1.26	19.04
			V	16.07	3.46	1.26	18.27
	661	1880.0	H	19.23	3.82	1.26	21.79
			V	15.83	3.82	1.26	18.39
	810	1909.8	H	16.17	4.16	1.26	19.07
			V	18.99	4.16	1.26	21.89
Limit							33

Attachment B--Radiated Out Band of Emissions

Measurement Data (worst case)

Test mode:	GSM 850						
Channel:	Middle						
Frequency (MHz)	Spurious Emission					Limit (dBm)	Result
	Polarization (H&V)	Read Level (dBm)	Antenna Correct Factor (dBi)	Cable Loss (dB)	Emission Level (dBm)		
1678.69	Horizontal	-29.24	7.48	6.12	-15.64	-13.00	Pass
2443.04	H	-55.84	7.02	7.86	-40.96		
3219.82	H	-53.67	12.47	6.12	-35.08		
1767.34	Vertical	-30.00	8.03	6.12	-15.85	-13.00	Pass
2564.04	V	-41.11	10.46	7.86	-22.79		
3243.94	V	-61.50	16.91	9.54	-35.05		

Remark: 1, The testing has been conformed to 10*836.6MHz=8,366MHz.
2, All other emissions more than 30 dB below the limit.
3, Emission Level= Read Level+ Antenna Correct Factor +Cable Loss

Test mode:	GSM 1900						
Channel:	Middle						
Frequency (MHz)	Spurious Emission					Limit (dBm)	Result
	Polarization (H&V)	Read Level (dBm)	Antenna Correct Factor (dBi)	Cable Loss (dB)	Emission Level (dBm)		
3619.32	Horizontal	-48.90	14.94	6.12	-27.84	-13.00	Pass
5726.36	H	-55.55	13.87	7.86	-33.82		
7307.49	H	-56.42	14.49	9.54	-32.39		
3895.31	Vertical	-47.58	15.97	3.97	-27.64	-13.00	Pass
5241.57	V	-57.76	13.94	5.05	-38.77		
7385.33	V	-54.74	13.87	5.98	-34.89		

Remark: 1, The testing has been conformed to 10*1880.0MHz=18,800MHz.
2, All other emissions more than 30 dB below the limit.
3, Emission Level= Read Level+ Antenna Correct Factor +Cable Loss

------End of the Report------