Radio Test Report

FCC ID: 2AVE6TG6A

Original Grant

Report No.	:	TBR-C-202403-0336-93	
Applicant	:	Tractive GmbH	
Equipment Under Test (EUT)			
EUT Name	:	Tractive Dog 6	
Model No.	:	TG6A	
Series Model No.	:	----	
Brand Name	:	Tractive	
Sample ID	:	HC-C-202403-0336-01-01# & HC-C-202403-0336-01-04#	
Receipt Date	:	2024-06-20	
Test Date	:	2024-06-20 to 2024-09-04	
Issue Date	:	2024-09-04	
Standards	:	47 CFR Part 2, 22(H), 24(E), 27	
Test Method	:	ANSI C63.26 2015	
Conclusions	:	**PASS**	
		In the configuration tested, the EUT complied with the standards specified above.	
Test By	:	Mike Yan	Mike Yan
Reviewed By	:	Camille Li	Camille Li
Approved By	:	IVAN SU	Ivan Su

This report details the results of the testing carried out on one sample. The results contained in this test report do not relate to other samples of the same product. The manufacturer should ensure that all products in series production are in conformity with the product sample detailed in the report.

1/F.,Building 6, Rundongsheng Industrial Zone, Longzhu, Xixiang, Bao'an District, Shenzhen, Guangdong, China
Tel: +86 75526509301 Fax: +86 75526509195

Contents

CONTENTS **2**

1. GENERAL INFORMATION ABOUT EUT **5**

1.1 Client Information 5

1.2 General Description of EUT (Equipment Under Test) 5

1.3 Block Diagram Showing the Configuration of System Tested 7

1.4 Description of Support Units 7

1.5 Measurement Uncertainty 8

1.6 Test Facility 8

2. TEST SUMMARY **9**

3. TEST SOFTWARE **10**

4. TEST EQUIPMENT AND TEST SITE **11**

5. CONDUCTED RF OUTPUT POWER **13**

5.1 Test Standard 13

5.2 Test Setup 13

5.3 Test Procedure 13

5.4 Deviation From Test Standard 13

5.5 EUT Operating Mode 13

5.6 Test Data 13

6. PEAK-AVERAGE RATIO **14**

6.1 Test Standard and Limit 14

6.2 Test Setup 14

6.3 Test Procedure 14

6.4 Deviation From Test Standard 14

6.5 EUT Operating Mode 14

6.6 Test Data 14

7. OCCUPIED BANDWIDTH **15**

7.1 Test Standard and Limit 15

7.2 Test Setup 15

7.3 Test Procedure 15

7.4 Deviation From Test Standard 15

7.5 EUT Operating Mode 15

7.6 Test Data 15

8. OUT OF BAND EMISSION AT ANTENNA TERMINALS **16**

8.1 Test Standard and Limit 16
8.2 Test Setup 17
8.3 Test Procedure 17
8.4 Deviation From Test Standard 17
8.5 EUT Operating Mode 17
8.6 Test Data 17
9. BAND EDGE TEST 18
9.1 Test Standard and Limit 18
9.2 Test Setup 19
9.3 Test Procedure 19
9.4 Deviation From Test Standard 19
9.5 EUT Operating Mode 19
9.6 Test Data 19
10. RADIATED OUTPUT POWER 20
10.1 Test Standard and Limit 20
10.2 Test Setup 20
10.3 Test Procedure 21
10.4 Deviation From Test Standard 21
10.5 EUT Operating Mode 21
10.6 Test Data 21
11. RADIATED OUT BAND OF EMISSIONS 22
11.1 Test Standard and Limit 22
11.2 Test Setup 22
11.3 Test Procedure 22
11.4 Deviation From Test Standard 22
11.5 EUT Operating Mode 22
11.6 Test Data 22
12. FREQUENCY STABILITY 23
12.1 Test Standard and Limit 23
12.2 Test Setup 23
12.3 Test Procedure 23
12.4 Deviation From Test Standard 23
12.5 EUT Operating Mode 23
12.6 Test Data 23
ATTACHMENT A--RADIATED OUTPUT POWER 24
ATTACHMENT B--RADIATED OUT BAND OF EMISSIONS 35

Revision History

Report No.	Version	Description	Issued Date
TBR-C-202403-0336-93	Rev.01	Initial issue of report	2024-09-04

1. General Information about EUT

1.1 Client Information

Applicant	:	Tractive GmbH
Address	:	Poststrasse 4, 4061 Pasching, AUSTRIA
Manufacturer	:	Tractive GmbH
Address	:	Poststrasse 4, 4061 Pasching, AUSTRIA

1.2 General Description of EUT (Equipment Under Test)

EUT Name	:	Tractive Dog 6	
Models No.	:	TG6A	
Model Different	:	----	
Product Description	:	Frequency Bands: LTE Band 2: TX: 1850MHz-1910MHz, RX: 1930MHz-1990MHz LTE Band 4: TX: 1710MHz-1755MHz, RX: 2110MHz-2155MHz LTE Band 5: TX: 824MHz-849MHz, RX: 869MHz-894MHz LTE Band 12: TX: 699MHz -716MHz, RX: 729MHz-746MHz LTE Band 13: TX: 777MHz -787MHz, RX: 746MHz-756MHz	
		Antenna Gain:	FPC Antenna: LTE Band 2: -0.2dBi LTE Band 4: -0.2dBi LTE Band 5: -5.5dBi LTE Band 12: -5.5dBi LTE Band 13: -5.5dBi
		Modulation Type:	QPSK, 16QAM
		Bandwidth:	LTE Band 2: 1.4MHz/3MHz/5MHz/10MHz/15MHz/20MHz LTE Band 4: 1.4MHz/3MHz/5MHz/10MHz/15MHz/20MHz LTE Band 5: 1.4MHz/3MHz/5MHz/10MHz LTE Band 12: 1.4MHz/3MHz/5MHz/10MHz LTE Band 13: 5MHz/10MHz
Power Rating	:	Input: DC 5V/1A	
Li-ion Polymer Battery	:	DC 3.87V by 930mAh Rechargeable Li-ion battery	
Software Version	:	TRV6-005	
Hardware Version	:	v.5	

Remark:
(1) The antenna gain provided by the applicant, the adapter and verified for the RF conduction test provided by TOBY test lab.
(2) The above antenna information is declared by manufacturer and for more detailed features description, please refer to the manufacturer's specifications, the laboratory shall not be held responsible. For a more detailed features description, please refer to the manufacturer's specifications or the User's Manual.

(3) Channel List

Test mode:	Nominal Bandwidth (MHz)	RF Channel		
		Low (L)	Middle (M)	High (H)
		MHz	MHz	MHz
LTE Band 2	1.4	1850.7	1880.0	1909.3
	3	1851.5	1880.0	1908.5
	5	1852.5	1880.0	1907.5
	10	1855.0	1880.0	1905.0
	15	1857.5	1880.0	1902.5
	20	1860.0	1880.0	1900.0

Test mode:	Nominal Bandwidth (MHz)	RF Channel		
		Low (L)	Middle (M)	High (H)
		MHz	MHz	MHz
LTE Band 4	1.4	1710.7	1732.5	1754.3
	3	1711.5	1732.5	1753.5
	5	1712.5	1732.5	1752.5
	10	1715.0	1732.5	1750.0
	15	1715.5	1732.5	1747.5
	20	1720.0	1732.5	1745.0

Test mode:	Nominal Bandwidth (MHz)	RF Channel		
		Low (L)	Middle (M)	High (H)
		MHz	MHz	MHz
LTE Band 5	1.4	824.7	836.5	848.3
	3	825.5	836.5	847.5
	5	826.5	836.5	846.5
	10	829.0	836.5	844.0

Test mode:	Nominal Bandwidth (MHz)	RF Channel		
		Low (L)	Middle (M)	High (H)
		MHz	MHz	MHz
LTE Band 12	1.4	699.7	707.5	715.3
	3	700.5	707.5	714.5
	5	701.5	707.5	713.5
	10	704.0	707.5	711.0

Test mode:	Nominal Bandwidth (MHz)	RF Channel		
		Low (L)	Middle (M)	High (H)
		MHz	MHz	MHz
LTE Band 13	5	779.5	782.0	784.5
	10	---	782.0	---

1.3 Block Diagram Showing the Configuration of System Tested

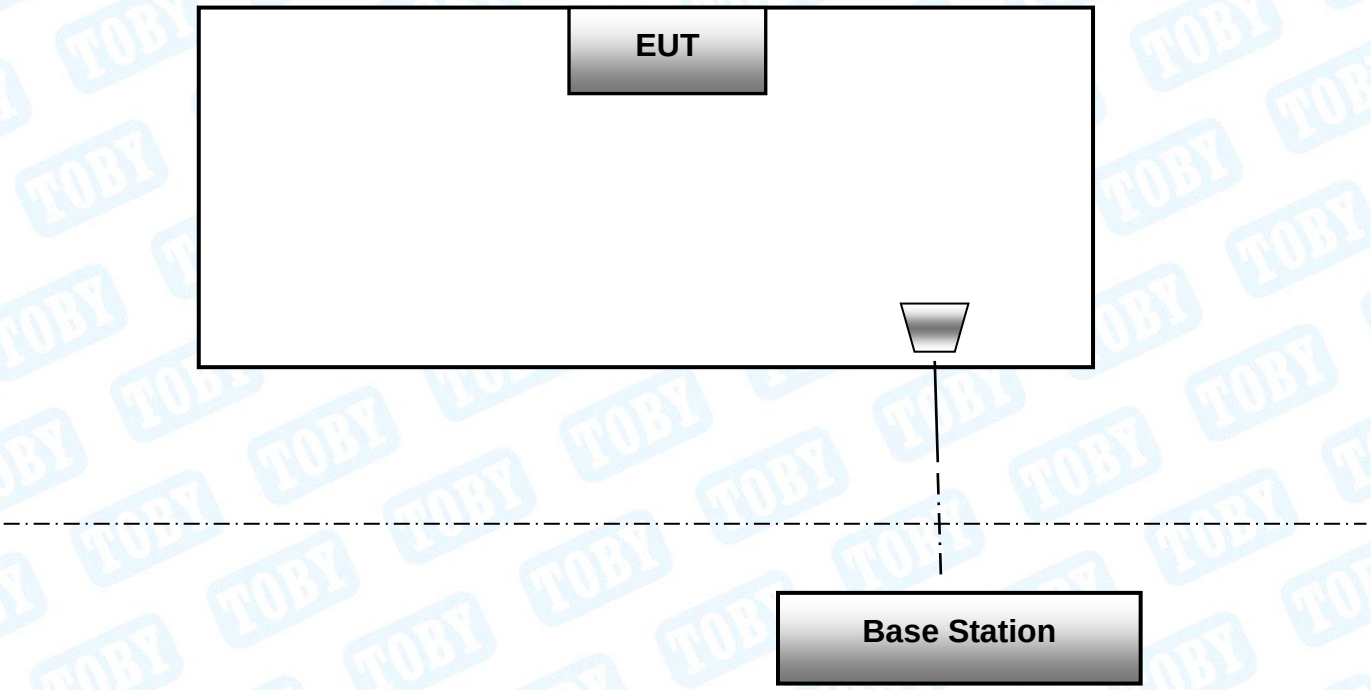

The above block diagram of setup is the normal mode. And more detail please refer to the test setup of each test item of bellow.

1.4 Description of Support Units

The EUT has been tested as an independent unit.

1.5 Measurement Uncertainty

Test Item	Parameters	Expanded Uncertainty (U_{Lab})
RF Power, conducted	/	±0.82 dB
Radiated Emission	Level Accuracy: 9kHz to 30 MHz	±4.60 dB
Radiated Emission	Level Accuracy: 30MHz to 1000 MHz	±4.40 dB
Radiated Emission	Level Accuracy: Above 1000MHz	±4.20 dB

1.6 Test Facility

The testing report were performed by the Shenzhen Toby Technology Co., Ltd., in their facilities located at 1/F., Building 6, Rundongsheng Industrial Zone, Longzhu, Xixiang, Bao'an District, Shenzhen, Guangdong, China. At the time of testing, the following bodies accredited the Laboratory:

CNAS (L5813)
The Laboratory has been accredited by CNAS to ISO/IEC 17025: 2017 General Requirements for the Competence of Testing and Calibration Laboratories for the competence in the field of testing. And the Registration No.: CNAS L5813.

A2LA Certificate No.: 4750.01
The laboratory has been accredited by American Association for Laboratory Accreditation(A2LA) to ISO/IEC 17025：2017 General Requirements for the Competence of Testing and Calibration Laboratories for the technical competence in the field of Electrical Testing. And the A2LA Certificate No.: 4750.01.FCC Accredited Test Site Number: 854351. Designation Number: CN1223.

IC Registration No.: (11950A)
The Laboratory has been registered by Certification and Engineering Bureau of Industry Canada for radio equipment testing. The site registration: Site# 11950A. CAB identifier: CN0056.

2. Test Summary

Test Item	Section in CFR 47	Result
RF Output Power	Part 2.1046 Part 22.913(a)(2) Part 24.232(c) Part 27.50 (b)(10) Part 27.50 (d)(4) Part 27.50 (h)(2)	**PASS**
Peak-to-Average Ratio	Part 24.232(d) Part 27.50(d)(5)	**PASS**
99% & -26 dB Occupied Bandwidth	Part 2.1049 Part 22.917(a) Part 24.238(b) Part 27.53(h) Part 27.53(m)	**PASS**
Spurious Emissions at Antenna Terminal	Part 2.1051 Part 24.238(a) Part 27.53 (h) Part 27.53(m)	**PASS**
Field Strength of Spurious Radiation	Part 2.1053 Part 22.917(a) Part 24.238(a) Part 27.53 (h) Part 27.53(m)	**PASS**
Out of band emission, Band Edge	Part 24.238(a) Part 22.917(a) Part 27.53 (h) Part 27.53(m)	**PASS**
Frequency stability vs. temperature	Part 27.54 Part 24.235 Part 22.355 Part 2.1055(a)(1)(b)	**PASS**
Frequency stability vs. voltage	Part 27.54 Part 24.235 Part 22.355 Part 2.1055(d)(2)	**PASS**
Pass: The EUT complies with the essential requirements in the standard.		

3. Test Software

Test Item	Test Software	Manufacturer	Version No.
Radiation Emission	EZ-EMC	EZ	FA-03A2RE+
RF Test System	JS1120	Tonscend	V3.1.46

4. Test Equipment and Test Site

Test Site				
No.	**Test Site**	**Manufacturer**	**Specification**	**Used**
TB-EMCSR001	Shielding Chamber #1	YIHENG	7.5*4.0*3.0 (m)	X
TB-EMCSR002	Shielding Chamber #2	YIHENG	8.0*4.0*3.0 (m)	√
TB-EMCCA001	3m Anechoic Chamber #A	ETS	9.0*6.0*6.0 (m)	X
TB-EMCCB002	3m Anechoic Chamber #B	YIHENG	9.0*6.0*6.0 (m)	√

Radiation Emission Test (B Site)					
Equipment	**Manufacturer**	**Model No.**	**Serial No.**	**Last Cal.**	**Cal. Due Date**
Spectrum Analyzer	Agilent	N9020A	MY49100060	Aug. 29, 2024	Aug. 28, 2025
Spectrum Analyzer	Rohde & Schwarz	FSV40-N	102197	Jun. 17, 2024	Jun. 16, 2025
EMI Test Receiver	Rohde & Schwarz	ESU-8	100472/008	Feb. 23, 2024	Feb.22, 2025
Bilog Antenna	SCHWARZBECK	VULB 9168	1225	Nov. 13, 2023	Nov. 12, 2025
Horn Antenna	SCHWARZBECK	BBHA 9120 D	2463	Jun. 14, 2024	Jun. 13, 2026
Horn Antenna	SCHWARZBECK	BBHA 9170	1118	Feb. 27, 2024	Feb.26, 2026
Loop Antenna	SCHWARZBECK	FMZB 1519 B	1519B-059	Jun. 14, 2024	Jun. 13, 2026
HF Amplifier	Tonscend	TAP9E6343	AP21C806117	Aug. 29, 2024	Aug. 28, 2025
HF Amplifier	Tonscend	TAP051845	AP21C806141	Aug. 29, 2024	Aug. 28, 2025
HF Amplifier	Tonscend	TAP0184050	AP21C806129	Aug. 29, 2024	Aug. 28, 2025
Highpass Filter	CD	HPM-6.4/18G	---	N/A	N/A
Highpass Filter	CD	HPM-2.8/18G	---	N/A	N/A
Highpass Filter	XINBO	XBLBQ-HTA67(8-25G)	22052702-1	N/A	N/A
Antenna Conducted Emission					
Equipment	**Manufacturer**	**Model No.**	**Serial No.**	**Last Cal.**	**Cal. Due Date**
Spectrum Analyzer	Rohde & Schwarz	FSV40-N	102197	Jun. 17, 2024	Jun. 16, 2025
MXA Signal Analyzer	KEYSIGHT	N9020B	MY60110172	Aug. 29, 2024	Aug. 28, 2025
MXA Signal Analyzer	Agilent	N9020A	MY47380425	Aug. 29, 2024	Aug. 28, 2025
Vector Signal Generator	Agilent	N5182A	MY50141294	Aug. 29, 2024	Aug. 28, 2025
Analog Signal Generator	Agilent	N5181A	MY48180463	Aug. 29, 2024	Aug. 28, 2025
Vector Signal Generator	KEYSIGHT	N5182B	MY59101429	Aug. 29, 2024	Aug. 28, 2025
Analog Signal Generator	KEYSIGHT	N5173B	MY61252685	Aug. 29, 2024	Aug. 28, 2025
RF Power Sensor	DARE!! Instruments	RadiPowerRPR3006W	17I00015SNO26	Aug. 29, 2024	Aug. 28, 2025
	DARE!! Instruments	RadiPowerRPR3006W	17I00015SNO29	Aug. 29, 2024	Aug. 28, 2025
	DARE!! Instruments	RadiPowerRPR3006W	17I00015SNO31	Aug. 29, 2024	Aug. 28, 2025
	DARE!! Instruments	RadiPowerRPR3006W	17I00015SNO33	Aug. 29, 2024	Aug. 28, 2025
RF Control Unit	Tonsced	JS0806-1	21C8060380	N/A	N/A
RF Control Unit	Tonsced	JS0806-2	21F8060439	Aug. 29, 2024	Aug. 28, 2025
Power Control Box	Tonsced	JS0806-4ADC	21C8060387	N/A	N/A
Wideband Radio	Rohde & Schwarz	CMW500	144382	Aug. 29, 2024	Aug. 28, 2025

Comunication Tester					
Universal Radio Communication Tester	Rohde&Schwarz	CMW500	168796	Feb. 23, 2024	Feb.22, 2025
Temperature and Humidity Chamber	ZhengHang	ZH-QTH-1500	ZH2107264	Jun. 14, 2024	Jun. 13, 2026

5. Conducted RF Output Power

5.1 Test Standard

5.1.1 Test Standard

FCC part 2.1046, FCC part 22.913(a)(2), FCC part 24.232(c),
FCC Part 27.50(b)&(d), FCC Part 27.50 (h)

5.2 Test Setup

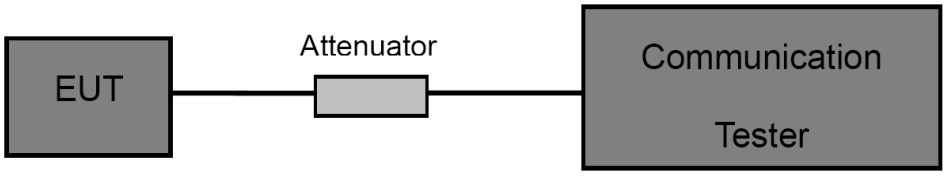

5.3 Test Procedure

(1) The EUT is coupled to the Base Station with the suitable Attenuator, the path loss is calibrated to correct the reading.

(2) A call is set up by the Base Station to the generic call set up procedure.

(3) Set EUT at maximum power level through base station by power level command.

(4) Then read record the power value from the Base Station in dBm.

5.4 Deviation From Test Standard

No deviation

5.5 EUT Operating Mode

The EUT was continuously connected with the Base station and transmitting in the max power during the test.

5.6 Test Data

Please refer to the Appendix D.

6. Peak-Average Ratio

6.1 Test Standard and Limit

6.1.1 Test Standard

FCC part 24.232(d); FCC Part 27.50(d); FCC Part 27.50 (h)

6.1.2 Test Limit

Peak-to-Average Ratio
The peak-to-average ratio (PAR) of the transmission may not exceed 13 dB.

6.2 Test Setup

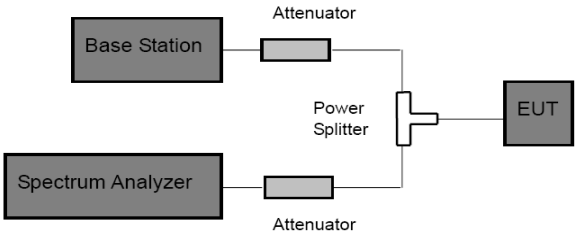

6.3 Test Procedure

According with KDB 971168

(1) The signal analyzer's CCDF measurement profile is enabled.

(2) Frequency = carrier center frequency.

(3) Measurement BW>Emission bandwidth of signal.

(4) The signal analyzer was set to collect one million samples to generate the CCDF curve.

(5) Set the EUT working in highest power level, measured and recorded the 0.1% as PAPR level.

(6) The measurement interval was set depending on the type of signal analyzed. For continuous signals (>98% duty cycle), the measurement interval was set to 1ms. For burst transmissions, the spectrum analyzer is set to use an internal "RF Burst" trigger that is synced with an incoming pulse and the measurement interval is set to less than the duration of the "on time" of one burst to ensure that energy is only captured during a time in which of the transmitter is operating at maximum power.

6.4 Deviation From Test Standard

No deviation

6.5 EUT Operating Mode

The EUT was continuously connected with the Base station and transmitting in the max power during the test.

6.6 Test Data

Please refer to the Appendix D.

7. Occupied Bandwidth

7.1 Test Standard and Limit

7.1.1 Test Standard

FCC Part 2: 2.1049, FCC Part 22.917(a), FCC part 24.238(b), FCC Part 27.53(h)
FCC Part 27.53(m)

7.1.2 Test Limit

According to FCC section 2.1049, the occupied bandwidth is the frequency bandwidth such that below its lower and above its upper frequency limits, the mean powers radiated are each equal to 0.5 percent of the total mean power radiated by a given emission.

Occupied bandwidth is also known as 99% power and -26dBC occupied bandwidths.

7.2 Test Setup

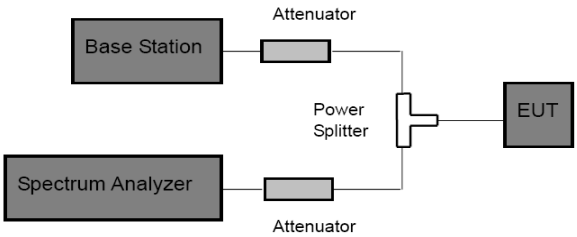

7.3 Test Procedure

(1) The EUT was directly connected to the spectrum analyzer and Base station via power splitter as show in the block diagram above.

(2) The resolution bandwidth of the Spectrum Analyzer is set to at least 1% of the occupied bandwidth. VBW= 3 times RBW.

(3) The low, middle and the high channels are selected to perform tests respectively.

(4) Set the frequency range of the Spectrum Analyzer suitably to capture the waveform; search peak; make a line whose value is 26dB lower than the peak; mark two points which the line intersected the waveform at; finally record the delta of the two points as the occupied bandwidth and the plot.

(5) Set the Spectrum Analyzer Occupied bandwidth function to measure the 99% occupied bandwidth.

7.4 Deviation From Test Standard

No deviation

7.5 EUT Operating Mode

The EUT was continuously connected with the Base station and transmitting in the max power during the test.

7.6 Test Data

Please refer to the Appendix D.

8. Out of Band Emission at Antenna Terminals

8.1 Test Standard and Limit

8.1.1 Test Standard

FCC Part 2: 2.1051, 2.1057; FCC Part 22.917(a), FCC part 24.238(a);
FCC Part 27.53 (h), FCC Part 27.53(m)

8.1.2 Test Limit

In addition to the limit outlined in section 4.7.1 above, equipment operating in the frequency bands 746-756 MHz and 777-787 MHz shall also comply with the following restrictions:
a) The power of any unwanted emissions in any 6.25 kHz bandwidth for all frequencies between 763-775 MHz and 793-806 MHz shall be attenuated below the transmitter power, P (dBW), by at least:
(i) 76 + 10 log10 p (watts), dB, for base and fixed equipment, and
(ii) 65 + 10 log10 p (watts), dB, for mobile and portable equipment.
b) The e.i.r.p. in the band 1559-1610 MHz shall not exceed -70 dBW/MHz for wideband signal and -80 dBW for discrete emission with bandwidth less than 700 Hz.

Mobile and base station equipment shall comply with the limits in (i) and (ii) below.
(i) In the first 1.0 MHz band immediately outside and adjacent to each of the sub-bands specified in Section 5.1, the power of emissions per any 1% of the occupied bandwidth shall be attenuated (in dB) below the transmitter output power P (dBW) by at least 43 + 10 log10 p (watts).
(ii) After the first 1.0 MHz immediately outside and adjacent to each of the sub-bands, the power of emissions in any 100 kHz bandwidth shall be attenuated (in dB) below the transmitter output power P (dBW) by at least 43 + 10 log10 p (watts). If the measurement is performed using 1% of the occupied bandwidth, power integration over 100 kHz is required.

Equipment shall comply with the limits in (i) and (ii) below.
(i) In the 1.0 MHz bands immediately outside and adjacent to the equipment's operating frequency block, the emission power per any 1% of the emission bandwidth shall be attenuated (in dB) below the transmitter output power P (dBW) by at least 43 + 10 log10 p(watts).
(ii)After the first 1.0 MHz, theemissionpowerin any 1 MHz bandwidth shall be attenuated(in dB) below the transmitter output powerP (dBW) by at least 43+10log10p(watts). If themeasurement isperformedusing 1% of the emission bandwidth, power integration over 1.0MHz is required.

(i) In the first 1.0 MHz bands immediately outside and adjacent to the equipment's smallest operating frequency block,2 which can contain the equipment's occupied bandwidth, the emission power per any 1% of the emission bandwidth shall be attenuated below the transmitter output power P (in dBW) by at least 43 + 10 log10 p (watts) dB.
(ii) After the first 1.0 MHz outside the equipment's smallest operating frequency block, which can contain the equipment's occupied bandwidth, the emission power in any 1 MHz bandwidth shall be attenuated below the transmitter output power P (in dBW) by at least 43 + 10 log10 p (watts) dB

8.2 Test Setup

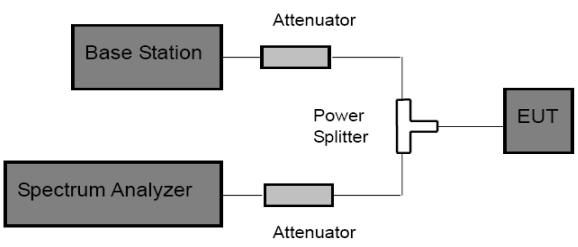

8.3 Test Procedure

1 The RF output of the transceiver was connected to a spectrum analyzer through appropriate attenuation.

2 The resolution bandwidth of the spectrum analyzer was set at 100 kHz when below 1GHz, 1MHz when above 1 GHz; sufficient scans were taken to show the out of band Emissions if any up to 10th harmonic.

3 For the out of band: Set the RBW=100 kHz, VBW=300 kHz when below 1 GHz, RBW =1 MHz, VBW=3 MHz when above 1 GHz, Start=30MHz, Stop= 10th harmonic.

4 Band Edge Requirements: In the 1 MHz bands immediately outside and adjacent to the frequency block, a resolution bandwidth of at least 1 percent of the emission bandwidth of the fundamental emission of the transmitter.

8.4 Deviation From Test Standard

No deviation

8.5 EUT Operating Mode

The EUT was continuously connected with the Base station and transmitting in the max power during the test.

8.6 Test Data

Please refer to the Appendix D.

9. Band Edge Test

9.1 Test Standard and Limit

9.1.1 Test Standard

FCC Part 2: 2.1051, 2.1057; FCC Part 22.917(a), FCC part 24.238(a)
FCC Part 27.53 (h), FCC Part 27.53(m)

9.1.2 Test Limit

In addition to the limit outlined in section 4.7.1 above, equipment operating in the frequency bands 746-756 MHz and 777-787 MHz shall also comply with the following restrictions:
a) The power of any unwanted emissions in any 6.25 kHz bandwidth for all frequencies between 763-775 MHz and 793-806 MHz shall be attenuated below the transmitter power, P (dBW), by at least:
(i) 76 + 10 log10 p (watts), dB, for base and fixed equipment, and
(ii) 65 + 10 log10 p (watts), dB, for mobile and portable equipment.
b) The e.i.r.p. in the band 1559-1610 MHz shall not exceed -70 dBW/MHz for wideband signal and -80 dBW for discrete emission with bandwidth less than 700 Hz.

Mobile and base station equipment shall comply with the limits in (i) and (ii) below.
(i) In the first 1.0 MHz band immediately outside and adjacent to each of the sub-bands specified in Section 5.1, the power of emissions per any 1% of the occupied bandwidth shall be attenuated (in dB) below the transmitter output power P (dBW) by at least 43 + 10 log10 p (watts).
(ii) After the first 1.0 MHz immediately outside and adjacent to each of the sub-bands, the power of emissions in any 100 kHz bandwidth shall be attenuated (in dB) below the transmitter output power P (dBW) by at least 43 + 10 log10 p (watts). If the measurement is performed using 1% of the occupied bandwidth, power integration over 100 kHz is required.

Equipment shall comply with the limits in (i) and (ii) below.
(i) In the 1.0 MHz bands immediately outside and adjacent to the equipment's operating frequency block, the emission power per any 1% of the emission bandwidth shall be attenuated (in dB) below the transmitter output power P (dBW) by at least 43 + 10 log10 p(watts).
(ii)After the first 1.0 MHz, theemissionpowerin any 1 MHz bandwidth shall be attenuated(in dB) below the transmitter output powerP (dBW) by at least 43+10log10p(watts). If themeasurement isperformedusing 1% of the emission bandwidth, power integration over 1.0MHz is required.

(i) In the first 1.0 MHz bands immediately outside and adjacent to the equipment's smallest operating frequency block,2 which can contain the equipment's occupied bandwidth, the emission power per any 1% of the emission bandwidth shall be attenuated below the transmitter output power P (in dBW) by at least 43 + 10 log10 p (watts) dB.
(ii) After the first 1.0 MHz outside the equipment's smallest operating frequency block, which can contain the equipment's occupied bandwidth, the emission power in any 1 MHz bandwidth shall be attenuated below the transmitter output power P (in dBW) by at least 43 + 10 log10 p (watts) dB

9.2 Test Setup

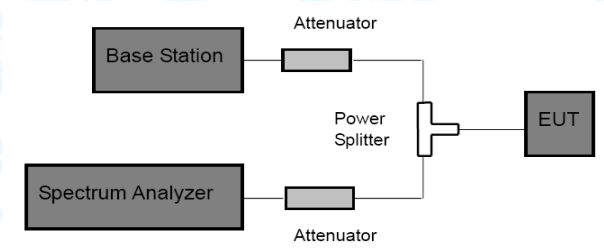

9.3 Test Procedure

1 The RF output of the transceiver was connected to a spectrum analyzer through appropriate attenuation.

2 The resolution bandwidth of the spectrum analyzer was set at 100 kHz when below 1GHz, 1MHz when above 1 GHz; sufficient scans were taken to show the out of band Emissions if any up to 10th harmonic.

3 For the out of band: Set the RBW=100 kHz, VBW=300 kHz when below 1 GHz, RBW =1 MHz, VBW=3 MHz when above 1 GHz, Start=30MHz, Stop= 10th harmonic.

4 Band Edge Requirements: In the 1 MHz bands immediately outside and adjacent to the frequency block, a resolution bandwidth of at least 1 percent of the emission bandwidth of the fundamental emission of the transmitter.

9.4 Deviation From Test Standard

No deviation

9.5 EUT Operating Mode

The EUT was continuously connected with the Base station and transmitting in the max power during the test.

9.6 Test Data

Please refer to the Appendix D.

10. Radiated Output Power

10.1 Test Standard and Limit

10.1.1 Test Standard

FCC Part 2.1046, FCC Part 22.913(a)(2), FCC part 24.232(c), FCC part 27.50(c), FCC part 27.50(d)

10.1.2 Test Limit

E.I.R.P	E.I.R.P	E.R.P	E.R.P
LTE Band 2	**LTE Band 4**	**LTE Band 5**	**LTE Band 12**
2W(33 dBm)	1W(30 dBm)	7W(38.45dBm)	3W(34.77dBm)
E.R.P			
LTE Band 13			
3W(34.77dBm)			

10.2 Test Setup

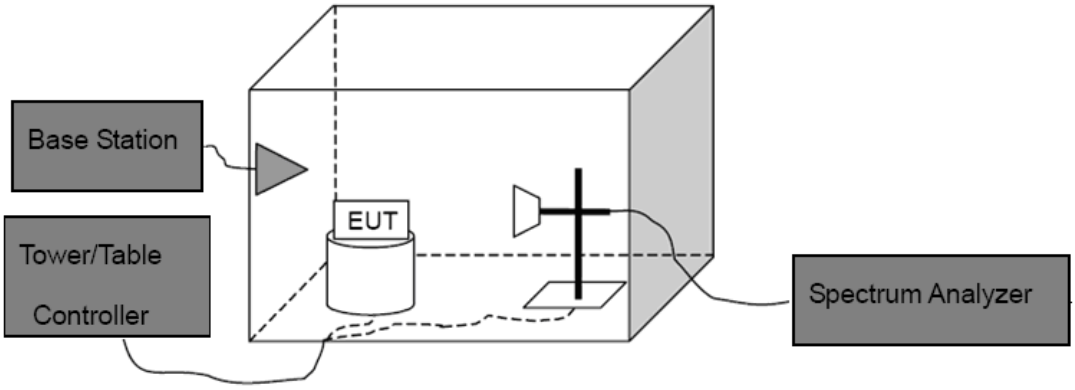

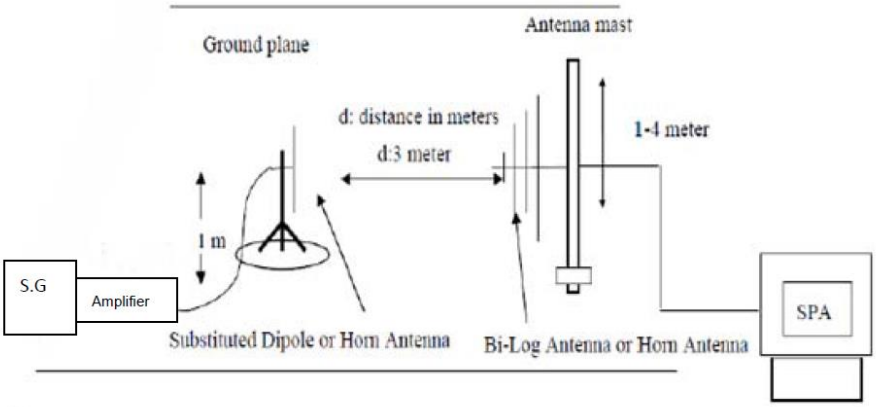

Substituted Method

10.3 Test Procedure

(1) The EUT was placed on an non-conductive rotating platform with 0.8 meter height in an anechoic chamber. The radiated emission at the fundamental frequency was measured at 3 m with a test antenna and a spectrum analyzer with RBW=3 MHz, VBW=3 MHz and peak detector settings.

(2) During the measurement, the EUT was enforced in maximum power and linked with the Base Station. The highest was recorded from analyzer power level (LVT) from the 360 degrees rotation of the turntable and the test antenna raised and lowered over a range from 1 to 4 meters in both horizontally and vertically polarized orientations.

(3) Effective Isotropic Radiated Power (EIRP) was measured by substitution method according to C63.26. The EUT was replaced by dipole antenna (for frequency below 1 GHz) or Horn antenna (for frequency above 1 GHz) at same location with same polarize of receiver antenna and then a known power of each measure frequency from S.G. was applied into the dipole antenna or Horn antenna through a TX cable, and then recorded the maximum Analyzer reading through raised and lowered the test antenna.

Note: In test, the S.G Connect the Pre-amplifier(Sonoma 310N Pre-amplifier for frequency below 1 GHz, HP 8449B Pre-amplifier for frequency above 1 GHz)

Then the EUT's EIRP and ERP was calculated with the correction factor:

ERP=S.G.Level +Antenna Gain Cord.(dB)-Cable Loss(dB)

EIRP=S.G.Level+Antenna Gain Cord.(dBi)-Cable Loss(dB)

10.4 Deviation From Test Standard

No deviation

10.5 EUT Operating Mode

The EUT was continuously connected with the Base station and transmitting in the max power during the test.

10.6 Test Data

Please refer to the Attachment A.

Measurement Data (worst case)

11. Radiated Out Band of Emissions

11.1 Test Standard and Limit

11.1.1 Test Standard

FCC Part 2: 2.1053, FCC Part 22.917(a), FCC part 24.238(a)
FCC Part 27.53 (h), FCC Part 27.53(m)

11.1.2 Test Limit

The power of any emission outside of the authorized operating frequency ranges must be attenuated below the transmitting power(P) by a factor of at least 43+10log(P) dB. For all power levels +30 dBm to 0 dBm, this becomes a constant specification limit of -13 dBm.

11.2 Test Setup

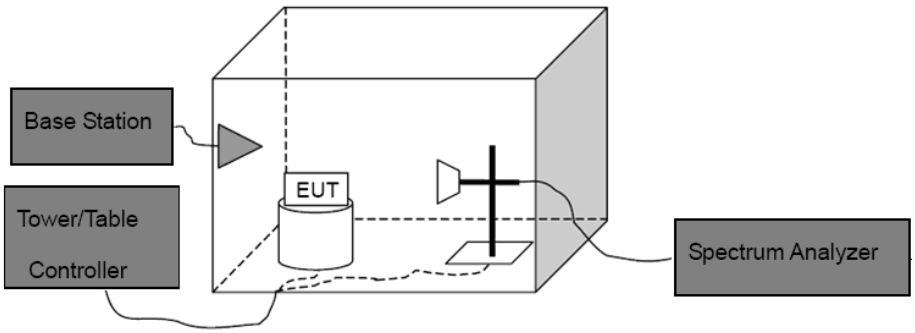

11.3 Test Procedure

(1) The test system setup as show in the block diagram above.
(2) The EUT was placed on an non-conductive rotating platform in an anechoic chamber. The radiated spurious emissions from 30MHz to 10th harmonious of fundamental frequency were measured at 3 m with a test antenna and a spectrum analyzer with RBW=1 MHz, VBW=1 MHz, peak detector settings.
(3) During the measurement, the EUT was enforced in maximum power and linked with a base station. All the spurious emissions at 3m were measured by rotation of the turntable and the test antenna raised and lowered over a range from 1 to 4 meters in both horizontally and vertically polarized orientations.
(4) When found the maximum level of emissions from the EUT. Remove the EUT and replace it with substitution antenna. A signal generator was connected to the substitution antenna by a non-radiating cable. The absolute levels of the spurious emissions were measured by the substitution.

Spurious emissions in dB=10 log(TX power in Watts/0.001)-the absolute level
Spurious attenuation limit in dB=43+10 log(power out in Watts)

11.4 Deviation From Test Standard

No deviation

11.5 EUT Operating Mode

The EUT was continuously connected with the Base station and transmitting in the max power during the test.

11.6 Test Data

Please refer to the Attachment B.

Measurement Data (worst case)

12. Frequency Stability

12.1 Test Standard and Limit

12.1.1 Test Standard

FCC Part 2.1055(a)(1)(b); FCC Part 22.355; FCC Part 24.235, Part 27.54

12.1.2 Test Limit

±2.5ppm

12.2 Test Setup

For Temperature Test:

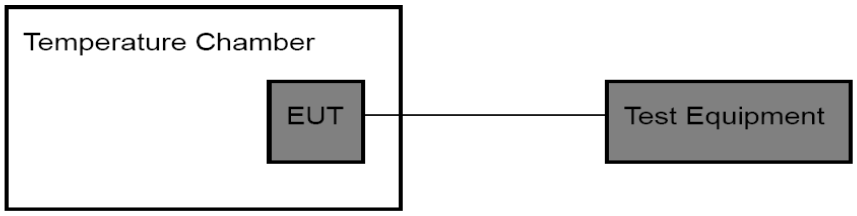

For Voltage Test:

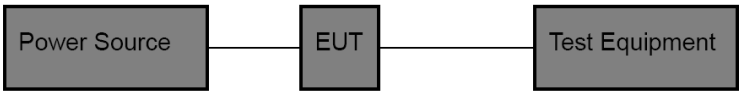

12.3 Test Procedure

Test Procedures for Temperature Variation:

(1) The EUT was set up in the thermal chamber and connected with the base station.
(2) With power off, the temperature was decreased to -30℃ and the EUT was stabilized for three hours. Power was applied and the maximum change in frequency was recorded within one minute.
(3) With power off, the temperature was raised in 10℃ set up to 50℃ and the EUT was stabilized for three hours. Power was applied and the maximum change in frequency was recorded within one minute.
(4) If the EUT cannot be turned on at -30℃, the testing lowest temperature will be raised in 10℃ step until the EUT can be turned on.

Test Procedures for Voltage Variation:

(1) The EUT was placed in a temperature chamber at 25±5℃ and connected with the base station.
(2) Reduce the input voltage to specify extreme voltage variation (+/- 15%) and endpoint, record the maximum frequency change.
(3) The variation in frequency was measured for the worst case.

12.4 Deviation From Test Standard

No deviation

12.5 EUT Operating Mode

The EUT was continuously connected with the Base station and transmitting in the max power during the test.

12.6 Test Data

Please refer to the Appendix D.

ATTACHMENT A--RADIATED OUTPUT POWER

Radiated Power (EIRP) for LTE Band 2 / 1.4M								
Modulation	RB		Channel	Antenna (H&V)	SG Level (dBm)	Antenna Factor (dBd)	Cable Loss (dB)	EIRP (dBm)
	Size	offset						
QPSK	1	0	Lowest	H	18.05	5.01	2.59	20.47
				V	20.41	5.01	2.59	22.83
	1	0	Middle	H	22.39	4.82	2.59	24.62
				V	22.33	4.82	2.59	24.56
	1	0	Highest	H	18.07	4.45	2.59	19.93
				V	20.33	4.45	2.59	22.19
16QAM	1	0	Lowest	H	17.18	5.01	2.59	19.60
				V	19.00	5.01	2.59	21.42
	1	0	Middle	H	21.95	4.82	2.59	24.18
				V	21.22	4.82	2.59	23.45
	1	0	Highest	H	16.87	4.45	2.59	18.73
				V	17.34	4.45	2.59	19.20
Limit (dBm)								**33**

Radiated Power (EIRP) for LTE Band 2 / 3M								
Modulation	RB		Channel	Antenna (H&V)	SG Level (dBm)	Antenna Factor (dBd)	Cable Loss (dB)	EIRP (dBm)
	Size	offset						
QPSK	1	0	Lowest	H	19.20	5.01	2.59	21.62
				V	19.71	5.01	2.59	22.13
	1	0	Middle	H	19.04	4.82	2.59	21.27
				V	16.62	4.82	2.59	18.85
	1	0	Highest	H	21.05	4.45	2.59	22.91
				V	20.92	4.45	2.59	22.78
16QAM	1	0	Lowest	H	16.86	5.01	2.59	19.28
				V	19.17	5.01	2.59	21.59
	1	0	Middle	H	18.75	4.82	2.59	20.98
				V	16.53	4.82	2.59	18.76
	1	0	Highest	H	18.24	4.45	2.59	20.10
				V	19.97	4.45	2.59	21.83
Limit (dBm)								**33**

Radiated Power (EIRP) for LTE Band 2 / 5M								
Modulation	RB		Channel	Antenna (H&V)	SG Level (dBm)	Antenna Factor (dBd)	Cable Loss (dB)	EIRP (dBm)
	Size	offset						
QPSK	1	0	Lowest	H	21.41	5.01	2.59	23.83
				V	21.09	5.01	2.59	23.51
	1	0	Middle	H	20.23	4.82	2.59	22.46
				V	20.24	4.82	2.59	22.47
	1	0	Highest	H	17.83	4.45	2.59	19.69
				V	20.18	4.45	2.59	22.04
16QAM	1	0	Lowest	H	19.93	5.01	2.59	22.35
				V	20.27	5.01	2.59	22.69
	1	0	Middle	H	18.72	4.82	2.59	20.95
				V	18.32	4.82	2.59	20.55
	1	0	Highest	H	16.68	4.45	2.59	18.54
				V	19.37	4.45	2.59	21.23
Limit (dBm)								33

Radiated Power (EIRP) for LTE Band 2 / 10M								
Modulation	RB		Channel	Antenna (H&V)	SG Level (dBm)	Antenna Factor (dBd)	Cable Loss (dB)	EIRP (dBm)
	Size	offset						
QPSK	1	0	Lowest	H	17.81	5.01	2.59	20.23
				V	20.74	5.01	2.59	23.16
	1	0	Middle	H	22.93	4.82	2.59	25.16
				V	19.60	4.82	2.59	21.83
	1	0	Highest	H	18.63	4.45	2.59	20.49
				V	18.07	4.45	2.59	19.93
16QAM	1	0	Lowest	H	17.35	5.01	2.59	19.77
				V	18.94	5.01	2.59	21.36
	1	0	Middle	H	21.35	4.82	2.59	23.58
				V	18.91	4.82	2.59	21.14
	1	0	Highest	H	17.85	4.45	2.59	19.71
				V	16.80	4.45	2.59	18.66
Limit (dBm)								33

Radiated Power (EIRP) for LTE Band 2 / 15M								
Modulation	RB		Channel	Antenna (H&V)	SG Level (dBm)	Antenna Factor (dBd)	Cable Loss (dB)	EIRP (dBm)
	Size	offset						
QPSK	1	0	Lowest	H	16.66	5.01	2.59	19.08
				V	19.96	5.01	2.59	22.38
	1	0	Middle	H	17.88	4.82	2.59	20.11
				V	19.91	4.82	2.59	22.14
	1	0	Highest	H	18.80	4.45	2.59	20.66
				V	18.52	4.45	2.59	20.38
16QAM	1	0	Lowest	H	16.44	5.01	2.59	18.86
				V	18.73	5.01	2.59	21.15
	1	0	Middle	H	17.45	4.82	2.59	19.68
				V	19.50	4.82	2.59	21.73
	1	0	Highest	H	17.80	4.45	2.59	19.66
				V	17.60	4.45	2.59	19.46
Limit (dBm)								**33**

Radiated Power (EIRP) for LTE Band 2 / 20M								
Modulation	RB		Channel	Antenna (H&V)	SG Level (dBm)	Antenna Factor (dBd)	Cable Loss (dB)	EIRP (dBm)
	Size	offset						
QPSK	1	0	Lowest	H	17.74	5.01	2.59	20.16
				V	22.59	5.01	2.59	25.01
	1	0	Middle	H	18.79	4.82	2.59	21.02
				V	21.93	4.82	2.59	24.16
	1	0	Highest	H	21.09	4.45	2.59	22.95
				V	18.70	4.45	2.59	20.56
16QAM	1	0	Lowest	H	16.77	5.01	2.59	19.19
				V	19.75	5.01	2.59	22.17
	1	0	Middle	H	15.80	4.82	2.59	18.03
				V	19.57	4.82	2.59	21.80
	1	0	Highest	H	19.76	4.45	2.59	21.62
				V	18.09	4.45	2.59	19.95
Limit (dBm)								**33**

Radiated Power (EIRP) for LTE Band 4 / 1.4M								
Modulation	RB		Channel	Antenna (H&V)	SG Level (dBm)	Antenna Factor (dBd)	Cable Loss (dB)	EIRP (dBm)
	Size	offset						
QPSK	1	0	Lowest	H	21.46	5.01	2.59	23.88
				V	19.16	5.01	2.59	21.58
	1	0	Middle	H	21.33	4.82	2.59	23.56
				V	18.46	4.82	2.59	20.69
	1	0	Highest	H	18.28	4.45	2.59	20.14
				V	23.35	4.45	2.59	25.21
16QAM	1	0	Lowest	H	21.07	5.01	2.59	23.49
				V	16.50	5.01	2.59	18.92
	1	0	Middle	H	20.17	4.82	2.59	22.40
				V	16.35	4.82	2.59	18.58
	1	0	Highest	H	16.30	4.45	2.59	18.16
				V	21.96	4.45	2.59	23.82
Limit (dBm)								**30**

Radiated Power (EIRP) for LTE Band 4 / 3M								
Modulation	RB		Channel	Antenna (H&V)	SG Level (dBm)	Antenna Factor (dBd)	Cable Loss (dB)	EIRP (dBm)
	Size	offset						
QPSK	1	0	Lowest	H	18.72	5.01	2.59	21.14
				V	19.52	5.01	2.59	21.94
	1	0	Middle	H	20.02	4.82	2.59	22.25
				V	20.34	4.82	2.59	22.57
	1	0	Highest	H	17.62	4.45	2.59	19.48
				V	17.71	4.45	2.59	19.57
16QAM	1	0	Lowest	H	16.90	5.01	2.59	19.32
				V	17.43	5.01	2.59	19.85
	1	0	Middle	H	19.96	4.82	2.59	22.19
				V	19.26	4.82	2.59	21.49
	1	0	Highest	H	16.49	4.45	2.59	18.35
				V	17.05	4.45	2.59	18.91
Limit (dBm)								**30**

Radiated Power (EIRP) for LTE Band 4 / 5M								
Modulation	RB		Channel	Antenna (H&V)	SG Level (dBm)	Antenna Factor (dBd)	Cable Loss (dB)	EIRP (dBm)
	Size	offset						
QPSK	1	0	Lowest	H	18.89	5.01	2.59	21.31
				V	19.21	5.01	2.59	21.63
	1	0	Middle	H	16.98	4.82	2.59	19.21
				V	16.39	4.82	2.59	18.62
	1	0	Highest	H	18.90	4.45	2.59	20.76
				V	21.41	4.45	2.59	23.27
16QAM	1	0	Lowest	H	16.18	5.01	2.59	18.60
				V	16.87	5.01	2.59	19.29
	1	0	Middle	H	16.04	4.82	2.59	18.27
				V	15.99	4.82	2.59	18.22
	1	0	Highest	H	18.63	4.45	2.59	20.49
				V	21.21	4.45	2.59	23.07
Limit (dBm)								30

Radiated Power (EIRP) for LTE Band 4 / 10M								
Modulation	RB		Channel	Antenna (H&V)	SG Level (dBm)	Antenna Factor (dBd)	Cable Loss (dB)	EIRP (dBm)
	Size	offset						
QPSK	1	0	Lowest	H	19.46	5.01	2.59	21.88
				V	18.01	5.01	2.59	20.43
	1	0	Middle	H	18.89	4.82	2.59	21.12
				V	19.89	4.82	2.59	22.12
	1	0	Highest	H	18.46	4.45	2.59	20.32
				V	20.60	4.45	2.59	22.46
16QAM	1	0	Lowest	H	19.37	5.01	2.59	21.79
				V	17.02	5.01	2.59	19.44
	1	0	Middle	H	17.15	4.82	2.59	19.38
				V	18.40	4.82	2.59	20.63
	1	0	Highest	H	17.91	4.45	2.59	19.77
				V	18.03	4.45	2.59	19.89
Limit (dBm)								30

Radiated Power (EIRP) for LTE Band 4 / 15M								
Modulation	RB		Channel	Antenna (H&V)	SG Level (dBm)	Antenna Factor (dBd)	Cable Loss (dB)	EIRP (dBm)
	Size	offset						
QPSK	1	0	Lowest	H	19.88	5.01	2.59	22.30
				V	18.56	5.01	2.59	20.98
	1	0	Middle	H	18.88	4.82	2.59	21.11
				V	17.42	4.82	2.59	19.65
	1	0	Highest	H	18.00	4.45	2.59	19.86
				V	19.21	4.45	2.59	21.07
16QAM	1	0	Lowest	H	18.50	5.01	2.59	20.92
				V	16.53	5.01	2.59	18.95
	1	0	Middle	H	17.65	4.82	2.59	19.88
				V	17.07	4.82	2.59	19.30
	1	0	Highest	H	17.46	4.45	2.59	19.32
				V	18.36	4.45	2.59	20.22
Limit (dBm)								30

Radiated Power (EIRP) for LTE Band 4 / 20M								
Modulation	RB		Channel	Antenna (H&V)	SG Level (dBm)	Antenna Factor (dBd)	Cable Loss (dB)	EIRP (dBm)
	Size	offset						
QPSK	1	0	Lowest	H	20.03	5.01	2.59	22.45
				V	18.13	5.01	2.59	20.55
	1	0	Middle	H	18.19	4.82	2.59	20.42
				V	18.06	4.82	2.59	20.29
	1	0	Highest	H	19.31	4.45	2.59	21.17
				V	20.36	4.45	2.59	22.22
16QAM	1	0	Lowest	H	18.53	5.01	2.59	20.95
				V	17.99	5.01	2.59	20.41
	1	0	Middle	H	16.33	4.82	2.59	18.56
				V	17.00	4.82	2.59	19.23
	1	0	Highest	H	18.14	4.45	2.59	20.00
				V	18.02	4.45	2.59	19.88
Limit (dBm)								30

Radiated Power (ERP) for LTE Band 5 / 1.4M								
Modulation	RB		Channel	Antenna (H&V)	SG Level (dBm)	Antenna Factor (dBd)	Cable Loss (dB)	ERP (dBm)
	Size	offset						
QPSK	1	0	Lowest	H	17.37	5.01	2.59	19.79
				V	19.16	5.01	2.59	21.58
	1	0	Middle	H	18.73	4.82	2.59	20.96
				V	17.59	4.82	2.59	19.82
	1	0	Highest	H	18.73	4.45	2.59	20.59
				V	21.03	4.45	2.59	22.89
16QAM	1	0	Lowest	H	16.29	5.01	2.59	18.71
				V	17.65	5.01	2.59	20.07
	1	0	Middle	H	17.33	4.82	2.59	19.56
				V	15.99	4.82	2.59	18.22
	1	0	Highest	H	18.51	4.45	2.59	20.37
				V	18.67	4.45	2.59	20.53
Limit (dBm)								**38.45**

Radiated Power (ERP) for LTE Band 5 / 3M								
Modulation	RB		Channel	Antenna (H&V)	SG Level (dBm)	Antenna Factor (dBd)	Cable Loss (dB)	ERP (dBm)
	Size	offset						
QPSK	1	0	Lowest	H	18.28	5.01	2.59	20.70
				V	19.67	5.01	2.59	22.09
	1	0	Middle	H	21.00	4.82	2.59	23.23
				V	19.91	4.82	2.59	22.14
	1	0	Highest	H	21.08	4.45	2.59	22.94
				V	18.01	4.45	2.59	19.87
16QAM	1	0	Lowest	H	16.80	5.01	2.59	19.22
				V	18.56	5.01	2.59	20.98
	1	0	Middle	H	19.73	4.82	2.59	21.96
				V	17.60	4.82	2.59	19.83
	1	0	Highest	H	18.72	4.45	2.59	20.58
				V	16.27	4.45	2.59	18.13
Limit (dBm)								**38.45**

Radiated Power (ERP) for LTE Band 5 / 5M								
Modulation	RB		Channel	Antenna (H&V)	SG Level (dBm)	Antenna Factor (dBd)	Cable Loss (dB)	ERP (dBm)
	Size	offset						
QPSK	1	0	Lowest	H	17.00	5.01	2.59	19.42
				V	18.24	5.01	2.59	20.66
	1	0	Middle	H	21.24	4.82	2.59	23.47
				V	19.57	4.82	2.59	21.80
	1	0	Highest	H	17.36	4.45	2.59	19.22
				V	17.58	4.45	2.59	19.44
16QAM	1	0	Lowest	H	16.10	5.01	2.59	18.52
				V	17.36	5.01	2.59	19.78
	1	0	Middle	H	18.96	4.82	2.59	21.19
				V	18.25	4.82	2.59	20.48
	1	0	Highest	H	16.50	4.45	2.59	18.36
				V	16.74	4.45	2.59	18.60
Limit (dBm)								**38.45**

Radiated Power (ERP) for LTE Band 5 / 10M								
Modulation	RB		Channel	Antenna (H&V)	SG Level (dBm)	Antenna Factor (dBd)	Cable Loss (dB)	ERP (dBm)
	Size	offset						
QPSK	1	0	Lowest	H	17.17	5.01	2.59	19.59
				V	21.27	5.01	2.59	23.69
	1	0	Middle	H	18.53	4.82	2.59	20.76
				V	19.22	4.82	2.59	21.45
	1	0	Highest	H	17.46	4.45	2.59	19.32
				V	23.05	4.45	2.59	24.91
16QAM	1	0	Lowest	H	16.92	5.01	2.59	19.34
				V	18.97	5.01	2.59	21.39
	1	0	Middle	H	15.92	4.82	2.59	18.15
				V	18.41	4.82	2.59	20.64
	1	0	Highest	H	17.00	4.45	2.59	18.86
				V	22.27	4.45	2.59	24.13
Limit (dBm)								**38.45**

Radiated Power (ERP) for LTE Band 12 / 1.4M								
Modulation	RB		Channel	Antenna (H&V)	SG Level (dBm)	Antenna Factor (dBd)	Cable Loss (dB)	ERP (dBm)
	Size	offset						
QPSK	1	0	Lowest	H	21.00	5.01	2.59	23.42
				V	20.24	5.01	2.59	22.66
	1	0	Middle	H	20.22	4.82	2.59	22.45
				V	16.15	4.82	2.59	18.38
	1	0	Highest	H	22.26	4.45	2.59	24.12
				V	23.51	4.45	2.59	25.37
16QAM	1	0	Lowest	H	19.09	5.01	2.59	21.51
				V	17.29	5.01	2.59	19.71
	1	0	Middle	H	18.16	4.82	2.59	20.39
				V	16.16	4.82	2.59	18.39
	1	0	Highest	H	22.10	4.45	2.59	23.96
				V	22.84	4.45	2.59	24.70
Limit (dBm)								**34.77**

Radiated Power (ERP) for LTE Band 12 / 3M								
Modulation	RB		Channel	Antenna (H&V)	SG Level (dBm)	Antenna Factor (dBd)	Cable Loss (dB)	ERP (dBm)
	Size	offset						
QPSK	1	0	Lowest	H	21.08	5.01	2.59	23.50
				V	21.57	5.01	2.59	23.99
	1	0	Middle	H	23.01	4.82	2.59	25.24
				V	17.06	4.82	2.59	19.29
	1	0	Highest	H	16.71	4.45	2.59	18.57
				V	19.02	4.45	2.59	20.88
16QAM	1	0	Lowest	H	18.72	5.01	2.59	21.14
				V	19.12	5.01	2.59	21.54
	1	0	Middle	H	21.63	4.82	2.59	23.86
				V	16.85	4.82	2.59	19.08
	1	0	Highest	H	16.67	4.45	2.59	18.53
				V	18.39	4.45	2.59	20.25
Limit (dBm)								**34.77**

Radiated Power (ERP) for LTE Band 12 / 5M								
Modulation	RB		Channel	Antenna (H&V)	SG Level (dBm)	Antenna Factor (dBd)	Cable Loss (dB)	ERP (dBm)
	Size	offset						
QPSK	1	0	Lowest	H	19.85	5.01	2.59	22.27
				V	17.77	5.01	2.59	20.19
	1	0	Middle	H	22.71	4.82	2.59	24.94
				V	20.88	4.82	2.59	23.11
	1	0	Highest	H	22.82	4.45	2.59	24.68
				V	20.56	4.45	2.59	22.42
16QAM	1	0	Lowest	H	17.53	5.01	2.59	19.95
				V	15.88	5.01	2.59	18.30
	1	0	Middle	H	22.16	4.82	2.59	24.39
				V	19.71	4.82	2.59	21.94
	1	0	Highest	H	22.50	4.45	2.59	24.36
				V	20.21	4.45	2.59	22.07
Limit (dBm)								**34.77**

Radiated Power (ERP) for LTE Band 12 / 10M								
Modulation	RB		Channel	Antenna (H&V)	SG Level (dBm)	Antenna Factor (dBd)	Cable Loss (dB)	ERP (dBm)
	Size	offset						
QPSK	1	0	Lowest	H	18.58	5.01	2.59	21.00
				V	22.75	5.01	2.59	25.17
	1	0	Middle	H	19.91	4.82	2.59	22.14
				V	22.56	4.82	2.59	24.79
	1	0	Highest	H	18.97	4.45	2.59	20.83
				V	22.31	4.45	2.59	24.17
16QAM	1	0	Lowest	H	18.51	5.01	2.59	20.93
				V	19.93	5.01	2.59	22.35
	1	0	Middle	H	18.28	4.82	2.59	20.51
				V	21.25	4.82	2.59	23.48
	1	0	Highest	H	18.92	4.45	2.59	20.78
				V	20.92	4.45	2.59	22.78
Limit (dBm)								**34.77**

Radiated Power (ERP) for LTE Band 13 / 5M								
Modulation	RB		Channel	Antenna (H&V)	SG Level (dBm)	Antenna Factor (dBd)	Cable Loss (dB)	ERP (dBm)
	Size	offset						
QPSK	1	0	Lowest	H	20.37	5.01	2.59	22.79
				V	17.42	5.01	2.59	19.84
	1	0	Middle	H	20.30	4.82	2.59	22.53
				V	18.25	4.82	2.59	20.48
	1	0	Highest	H	20.29	4.45	2.59	22.15
				V	16.75	4.45	2.59	18.61
16QAM	1	0	Lowest	H	17.41	5.01	2.59	19.83
				V	15.75	5.01	2.59	18.17
	1	0	Middle	H	18.60	4.82	2.59	20.83
				V	17.32	4.82	2.59	19.55
	1	0	Highest	H	18.83	4.45	2.59	20.69
				V	16.34	4.45	2.59	18.20
Limit (dBm)								**34.77**

Radiated Power (ERP) for LTE Band 13 / 10M								
Modulation	RB		Channel	Antenna (H&V)	SG Level (dBm)	Antenna Factor (dBd)	Cable Loss (dB)	ERP (dBm)
	Size	offset						
QPSK	1	0	Lowest	H	19.03	5.01	2.59	21.45
				V	20.49	5.01	2.59	22.91
	1	0	Middle	H	20.11	4.82	2.59	22.34
				V	17.77	4.82	2.59	20.00
	1	0	Highest	H	18.05	4.45	2.59	19.91
				V	18.73	4.45	2.59	20.59
16QAM	1	0	Lowest	H	18.42	5.01	2.59	20.84
				V	17.87	5.01	2.59	20.29
	1	0	Middle	H	19.68	4.82	2.59	21.91
				V	16.21	4.82	2.59	18.44
	1	0	Highest	H	16.59	4.45	2.59	18.45
				V	16.67	4.45	2.59	18.53
Limit (dBm)								**34.77**

ATTACHMENT B--RADIATED OUT BAND OF EMISSIONS

Measurement Data (worst case)

Internal antenna

Test mode:	LTE BAND 2 20MHz (RB size 1 & RB offset 0) for QPSK						
Channel:	Middle						
Frequency (MHz)	Spurious Emission					Limit (dBm)	Result
	Polarization (H&V)	Read Level (dBm)	Antenna Correct Factor (dBi)	Cable Loss (dB)	Emission Level (dBm)		
7729.56	Horizontal	-55.64	14.94	6.12	-34.58	-13.00	Pass
10867.49	H	-63.78	13.87	7.86	-42.05		
7100.86	Vertical	-36.39	8.02	3.97	-24.40	-13.00	Pass
10822.20	V	-46.68	10.47	5.05	-31.16		

Remark: 1, The testing has been conformed to 10*1880MHz=18800MHz.
2, All other emissions more than 30 dB below the limit.
3, Emission Level= Read Level+ Antenna Correct Factor +Cable Loss

Test mode:	LTE BAND 4 20MHz (RB size 1 & RB offset 0) for QPSK						
Channel:	Middle						
Frequency (MHz)	Spurious Emission					Limit (dBm)	Result
	Polarization (H&V)	Read Level (dBm)	Antenna Correct Factor (dBi)	Cable Loss (dB)	Emission Level (dBm)		
7732.62	Horizontal	-55.31	14.94	6.12	-34.25	-13.00	Pass
10924.42	H	-65.46	13.87	7.86	-43.73		
6734.60	Vertical	-41.28	8.02	3.97	-29.29	-13.00	Pass
8474.15	V	-46.96	10.47	5.05	-31.44		

Remark: 1, The testing has been conformed to 10*1732.5MHz=17325MHz.
2, All other emissions more than 30 dB below the limit.
3, Emission Level= Read Level+ Antenna Correct Factor +Cable Loss

Test mode:	LTE BAND 5 10MHz (RB size 1 & RB offset 0) for QPSK						
Channel:	Middle						
Frequency (MHz)	Spurious Emission					Limit (dBm)	Result
	Polarization (H&V)	Read Level (dBm)	Antenna Correct Factor (dBi)	Cable Loss (dB)	Emission Level (dBm)		
7295.59	Horizontal	-51.56	14.94	6.12	-30.50	-13.00	Pass
8552.28	H	-67.37	13.87	7.86	-45.64		
6738.58	Vertical	-33.77	8.02	3.97	-21.78	-13.00	Pass
10303.57	V	-46.49	10.47	5.05	-30.97		

Remark: 1, The testing has been conformed to 10*836.5MHz=8365MHz.
2, All other emissions more than 30 dB below the limit.
3, Emission Level= Read Level+ Antenna Correct Factor +Cable Loss

Test mode:	LTE BAND 12 10MHz (RB size 1 & RB offset 0) for QPSK						
Channel:	Middle						
Frequency (MHz)	Spurious Emission					Limit (dBm)	Result
	Polarization (H&V)	Read Level (dBm)	Antenna Correct Factor (dBi)	Cable Loss (dB)	Emission Level (dBm)		
7139.44	Horizontal	-56.03	14.94	6.12	-34.97	-25.00	Pass
9510.72	H	-68.77	13.87	7.86	-47.04		
3595.18	Vertical	-39.21	8.02	3.97	-27.22	-25.00	Pass
4807.52	V	-44.28	10.47	5.05	-28.76		

Remark: 1, The testing has been conformed to 10*707.5MHz=7075MHz.
2, All other emissions more than 30 dB below the limit.
3, Emission Level= Read Level+ Antenna Correct Factor +Cable Loss

Test mode:	**LTE BAND 13 10MHz (RB size 1 & RB offset 0) for QPSK**						
Channel:	**Middle**						
Frequency (MHz)	Spurious Emission					Limit (dBm)	Result
	Polarization (H&V)	Read Level (dBm)	Antenna Correct Factor (dBi)	Cable Loss (dB)	Emission Level (dBm)		
8450.16	Horizontal	-58.78	14.94	6.12	-37.72	-25.00	Pass
10871.68	H	-66.87	13.87	7.86	-45.14		
7042.06	Vertical	-40.21	8.02	3.97	-28.22	-25.00	Pass
10841.71	V	-46.71	10.47	5.05	-31.19		

Remark: 1, The testing has been conformed to 10*782.0MHz=7820MHz.
2, All other emissions more than 30 dB below the limit.
3, Emission Level= Read Level+ Antenna Correct Factor +Cable Loss

------End of Report------