Swarm Tile Product Manual

Swarm Tile Manual
Revision 0.95
March 2020

© 2020 SWARM TECHNOLOGIES

Legal Notices

This User Manual provides user information and is provided “as is.” Swarm Technologies and its affiliated companies, directors, officers, employees, agents, trustees or consultants (“Swarm”) assume no responsibility for any typographical, technical, content or other inaccuracies in this User Manual. Swarm reserves the right to revise this User Manual or withdraw it at any time without prior notice. You can find the current version of this Swarm Tile User Manual at www.swarm.space.

SWARM MAKES NO GUARANTEES, CONDITIONS, WARRANTIES, OR REPRESENTATIONS, EITHER EXPRESS OR IMPLIED, INCLUDING WITHOUT LIMITATION, ANY IMPLIED REPRESENTATIONS, GUARANTEES, CONDITIONS OR WARRANTIES OF MERCHANTABILITY AND FITNESS FOR A PARTICULAR PURPOSE, NONINFRINGEMENT, SATISFACTORY QUALITY, NON-INTERFERENCE, ACCURACY OF INFORMATIONAL CONTENT, OR ARISING FROM A COURSE OF DEALING, LAW, USAGE, OR TRADE PRACTICE, USE, OR RELATED TO THE PERFORMANCE OR NONPERFORMANCE OF ANY PRODUCTS, ACCESSORIES, FACILITIES, SERVICES OR USER INFORMATION, EXCEPT AS EXPRESSLY STATED IN THE LIMITED WARRANTY. ANY OTHER STANDARDS OF PERFORMANCE, GUARANTEES, CONDITIONS AND WARRANTIES ARE HEREBY EXPRESSLY EXCLUDED AND DISCLAIMED TO THE FULLEST EXTENT PERMITTED BY LAW. THIS DISCLAIMER AND EXCLUSION SHALL APPLY EVEN IF THE EXPRESS LIMITED WARRANTY PROVIDED IN THE LEGAL INFORMATION BOOKLET FAILS OF ITS ESSENTIAL PURPOSE. FURTHER, THE LIMITED WARRANTY COVERS THE Swarm Tile (INCLUDING HARDWARE, SOFTWARE AND/OR FIRMWARE) AND ACCESSORIES ONLY, AND NO WARRANTY IS MADE AS TO USER INFORMATION AND/ OR COVERAGE, AVAILABILITY OR GRADE OF SERVICE PROVIDED BY SWARM SEPARATELY FOR SWARM SATELLITE SERVICES.

IN NO EVENT SHALL SWARM BE LIABLE, WHETHER IN CONTRACT OR TORT OR ANY OTHER LEGAL THEORY, INCLUDING WITHOUT LIMITATION STRICT LIABILITY, GROSS NEGLIGENCE OR NEGLIGENCE, OR IMPLIED WARRANTY, FOR ANY DAMAGES IN EXCESS OF THE PURCHASE PRICE OF THE Swarm Tile (INCLUDING HARDWARE, SOFTWARE AND/OR FIRMWARE) AND/OR ACCESSORIES AND/OR THE COST OF SWARM SATELLITE SERVICES PROVIDED, NOR SHALL SWARM BE LIABLE FOR ANY DIRECT, INDIRECT, INCIDENTAL, SPECIAL, CONSEQUENTIAL, OR PUNITIVE DAMAGES OF ANY KIND, OR LOSS OF REVENUE OR PROFITS, LOSS OF BUSINESS, LOSS OF PRIVACY, LOSS OF USE, LOSS OF TIME OR INCONVENIENCE, LOSS OF INFORMATION OR DATA, SOFTWARE OR APPLICATIONS OR OTHER FINANCIAL LOSS CAUSED BY THE Swarm Tile (INCLUDING HARDWARE, SOFTWARE AND/ OR FIRMWARE) AND/OR ACCESSORIES AND/OR THE SWARM SATELLITE SERVICES, OR ARISING OUT OF OR IN CONNECTION WITH THE ABILITY OR INABILITY TO USE THE Swarm Tile (INCLUDING HARDWARE, SOFTWARE AND/OR FIRMWARE) AND/OR ACCESSORIES AND/OR THE SWARM SATELLITE SERVICES , TO THE FULLEST EXTENT THESE DAMAGES MAY BE DISCLAIMED BY LAW AND REGARDLESS OF WHETHER SWARM WAS ADVISED OF THE POSSIBILITIES OF SUCH DAMAGES.

© 2020 SWARM TECHNOLOGIES

Third Party Information

This User Manual might refer to third party sources of information, hardware or software, products or services and/or third party web sites ("third party information"). Swarm does not control, and is not responsible for, any third party information, including without limitation the content, accuracy, copyright compliance, compatibility, performance, trustworthiness, legality, decency, links, or any other aspect of third party information. The inclusion of such third party information does not imply endorsement by Swarm of the third party information. ANY THIRD PARTY INFORMATION THAT IS PROVIDED WITH SWARM'S FACILITIES, SERVICES, PRODUCTS OR USER INFORMATION IS PROVIDED "AS IS.'' SWARM MAKES NO REPRESENTATIONS, GUARANTEES OR WARRANTIES IN RELATION TO THIRD PARTY INFORMATION AND SWARM SHALL NOT BE LIABLE FOR ANY LOSSES, DAMAGES, LIABILITIES, JUDGMENTS, FINES, AMOUNTS PAID IN SETTLEMENT, EXPENSES OR COSTS OF DEFENSE SUSTAINED IN RELATION TO ANY SUCH THIRD PARTY INFORMATION.

Intellectual Property, Trade Secret, Proprietary or Copyrighted Information

To protect Swarm proprietary and confidential information and/or trade secrets, this User Manual may describe some aspects of Swarm technology in generalized terms. Swarm products may include copyrighted Swarm and third party software. Any such copyrighted software contained in Swarm products may not be modified, reverse engineered, distributed or reproduced in any manner to the extent provided by law. The purchase of any Swarm products shall not be deemed to grant either directly or by implication or otherwise, any license under copyrights, patents, or patent applications of Swarm or any third party software provider, except for the normal, nonexclusive, royalty free license to use that arises by operation of law in the sale of a product.

Content Copyright

You are exclusively responsible for the use of the Swarm Tile, including proper use of third party copyrighted materials. If you violate these terms you agree to defend, indemnify and hold Swarm harmless with respect to any claims or actions by third parties related to your improper use of copyrighted materials and to pay all costs, damages, fines and other amounts incurred by Swarm, or on its behalf, in the defense of any such claims or actions.

Export Compliance

The Swarm Tile is controlled by the export laws and regulations of the United States of America. The U.S. Government may restrict the export or re-export of this product to certain individuals and/or destinations. For further information, contact the U.S. Department of Commerce, Bureau of Industry and Security or visit www.bis.doc.gov

© 2020 SWARM TECHNOLOGIES

Revision History

Revision	Date	Comment
0.95	03/16/2020	Tile Product Manual - Initial Release

Swarm Tile Product Manual **0**

Revision History **3**

1 Safety Information and Compliance **5**

1.1 FCC Compliance 5

1.2 ISED Compliance 6

1.3 Transceiver Regulatory Certification 7

2 Product Overview **8**

3 Mechanical Specification **9**

3.1 Tile Dimensions 10

3.2 Environmental 10

3.2 Mechanical Specification – Mounting 10

3.3 Reflow Soldering 11

3.4 Physical Interface Connectors 13

4 Electrical Interfaces **14**

4.1 User Connector 14

4.2 Tile Pin Allocation 14

4.3 DC Power Interface 16

4.4 Power On/Off Control 19

4.5 Serial Data Interface 19

5 RF Interface **20**

5.2 Antenna Implementation 20

5.2.1 Antenna Characteristics 21

5.3 RF Trace Layout Design 22

© 2020 SWARM TECHNOLOGIES

6 Software interface **25**
Message types 25
General command structure 25
Command timing 25
Additional notes 26
6.1 Unsolicited Messages 27
Date/time 27
Tile status 28
Geospatial information 29
GPS fix quality 30
GPS spoofing indicator 31
Received data 31
6.2 Commands and Responses 32
Date/time 32
Firmware version 34
Geospatial information 35
GPS Fix Quality 37
Manage received messages 39
Disable/enable messages 41
Restart Tile 45
Sleep mode 46
Transmit data 49

© 2020 SWARM TECHNOLOGIES

1 Safety Information and Compliance

The Tile is designed to comply with the standards for Radio Emissions Compliance and Electromagnetic Compatibility in the United States, Canada, Australia, New Zealand, United Kingdom, and the European Union.

1.1 FCC Compliance

1.1.1 FCC Interference Statement (Part 15.105 (b))

This equipment has been tested and found to comply with the limits for a Class B digital device, pursuant to Part 15 of the FCC Rules. These limits are designed to provide reasonable protection against harmful interference in a residential installation. This equipment generates uses and can radiate radio frequency energy and, if not installed and used in accordance with the instructions, may cause harmful interference to radio communications. However, there is no guarantee that interference will not occur in a particular installation. If this equipment does cause harmful interference to radio or television reception, which can be determined by turning the equipment off and on, the user is encouraged to try to correct the interference by one of the following measures:

- Reorient or relocate the receiving antenna.
- Increase the separation between the equipment and receiver.
- Connect the equipment into an outlet on a circuit different from that to which the receiver is connected.
- Consult the dealer or an experienced radio/TV technician for help.

This device complies with part 15 of the FCC Rules. Operation is subject to the condition that this device does not cause harmful interference.

1.1.2 FCC Part 15 Clause 15.21:

Changes or modifications not expressly approved by the party responsible for compliance could void the user's authority to operate the equipment.

1.1.3 FCC Part 15.19(a):

This device complies with part 15 of the FCC Rules. Operation is subject to the following two conditions: (1) This device may not cause harmful interference, and (2) this device must accept any interference received, including interference that may cause undesired operation.

1.1.4 FCC ID:

© 2020 SWARM TECHNOLOGIES

The FCC ID for the Tile is **2AVE9-TILE01**. All manufacturers integrating the Tile into their products are advised to provide a physical or e-label stating “Contains FCC ID: **2AVE9-TILE01**”

1.1.5Part 15 Subpart B Disclaimer:

The final host product requires Part 15B compliance testing with the modular transmitter installed.

1.2 ISED Compliance

1.2.1 ISED RSS-Gen Notice CAN ICES-3 (B)NMB-3(B):

This device complies with Industry Canada’s licence-exempt RSSs. Operation is subject to the following two conditions:
(1) This device may not cause interference; and
(2) This device must accept any interference, including interference that may cause undesired operation of the device.

Le présent appareil est conforme aux CNR d’Industrie Canada applicables aux appareils radio exempts de licence. L’exploitation est autorisée aux deux conditions suivantes :
1) l’appareil ne doit pas produire de brouillage;
2) l’appareil doit accepter tout brouillage radioélectrique subi, même si le brouillage est susceptible d’en compromettre le fonctionnement.

1.2.2 IC ID:

The IC ID for the Tile is **25817-TILE01**. All manufacturers integrating the Tile into their products are advised to provide a physical or e-label stating “Contains IC ID: **25817-TILE01**”

1.3 RF Exposure Guidance

In order to comply with FCC / ISED RF Exposure requirements, this device must be installed to provide at least 29 cm separation from the human body at all times.

Afin de se conformer aux exigences d'exposition RF FCC / ISED, cet appareil doit être installé pour fournir au moins 29 cm de séparation du corps humain en tout temps.

© 2020 SWARM TECHNOLOGIES

1.3 Transceiver Regulatory Certification

The Tile is a regulatory approved modular transmitter that is designed to be integrated into a enclosed host system. With appropriate external connections, the host can be designed to emet full regulatory tests and sold as a regulatory certified product that meets FCC, IC, and CE requirements

Regulatory Approvals	Radio Tests	EMC Tests	Safety Tests
FCC	FCC CFR47 Parts 2, 15, and 25		
IC	Industry Canada RSS170 Issue 2 - March 2011		
CE	ETSI EN 301 721 V2.1.1 (2016-05)	CISPR 16-23:2010/A1:2010 EN 55032:2012 EN 6100-4-2/EN55024:2010 EN 6100-4-3/EN55024:2010 EN 6100-4-8/EN55024:2010	EN 62368-1:2014/A11:2017

© 2020 SWARM TECHNOLOGIES

2 Product Overview

The Swarm Tile (Model: TILE01) satellite data modem transmits and receives data to and from Swarm's space network and is designed to be embedded into a third-party product. Swarm backend systems can support the delivery of customer data via a REST API to the cloud service of each user's choice.

The Tile is a miniaturized module suitable for a variety of low-bandwidth use cases: from connecting people and tracking vehicles, ships, or packages to relaying sensor data for agriculture, energy, and industrial IoT applications.

Using proven IoT technologies, the Tile is an SMT module that can be easily integrated into any new or existing PCB design. The Tile communicates via a standard 3.3V CMOS serial UART interface or a PC interface with a USB-to-serial converter.

<table>
<tr><th>Category</th><th>Description</th></tr>
<tr><td>Satellite data</td><td>Message transmission access will be <1 min (90% of the time) by late 2020. As Swarm's network grows, transmission latencies of <60s will be achieved.</td></tr>
<tr><td>Components</td><td>GPS, VHF radio with integrated T/R switch, U.FL connector for GPS and VHF antenna (SMD interface also available), ARM Cortex-M4 processor, indicator LEDs, 3.3V serial interface, 3.3V GPIO</td></tr>
<tr><td>Sensors</td><td>Onboard GPS (lat/lon/alt), 1 Hz</td></tr>
<tr><td>Dimensions and Mass</td><td>59 mm x 27 mm x 7 mm, 10g
See detailed description in Mechanical Specification section.</td></tr>
<tr><td>Power</td><td>
<table>
<tr><th>Mode</th><th>Average</th><th>Peak</th></tr>
<tr><td>Sleep, 3.3V</td><td>24 µA</td><td>33 µA</td></tr>
<tr><td>Receiver Active, 3.3V</td><td>55 mA</td><td>57 mA</td></tr>
<tr><td>Transmitter on, 3.3V</td><td>745 mA</td><td>750 mA</td></tr>
</table>
</td></tr>
<tr><td>Protocol</td><td>Modified NMEA two-letter command set via 3.3V CMOS serial UART interface</td></tr>
<tr><td>Data rate</td><td>1 to 2.7 kbps. Maximum packet size of 200 bytes</td></tr>
</table>

© 2020 SWARM TECHNOLOGIES

Table 1: Overview of the Swarm Tile

© 2020 SWARM TECHNOLOGIES

3 Mechanical Specification

A diagram of the Tile is shown in **Figure 1**.

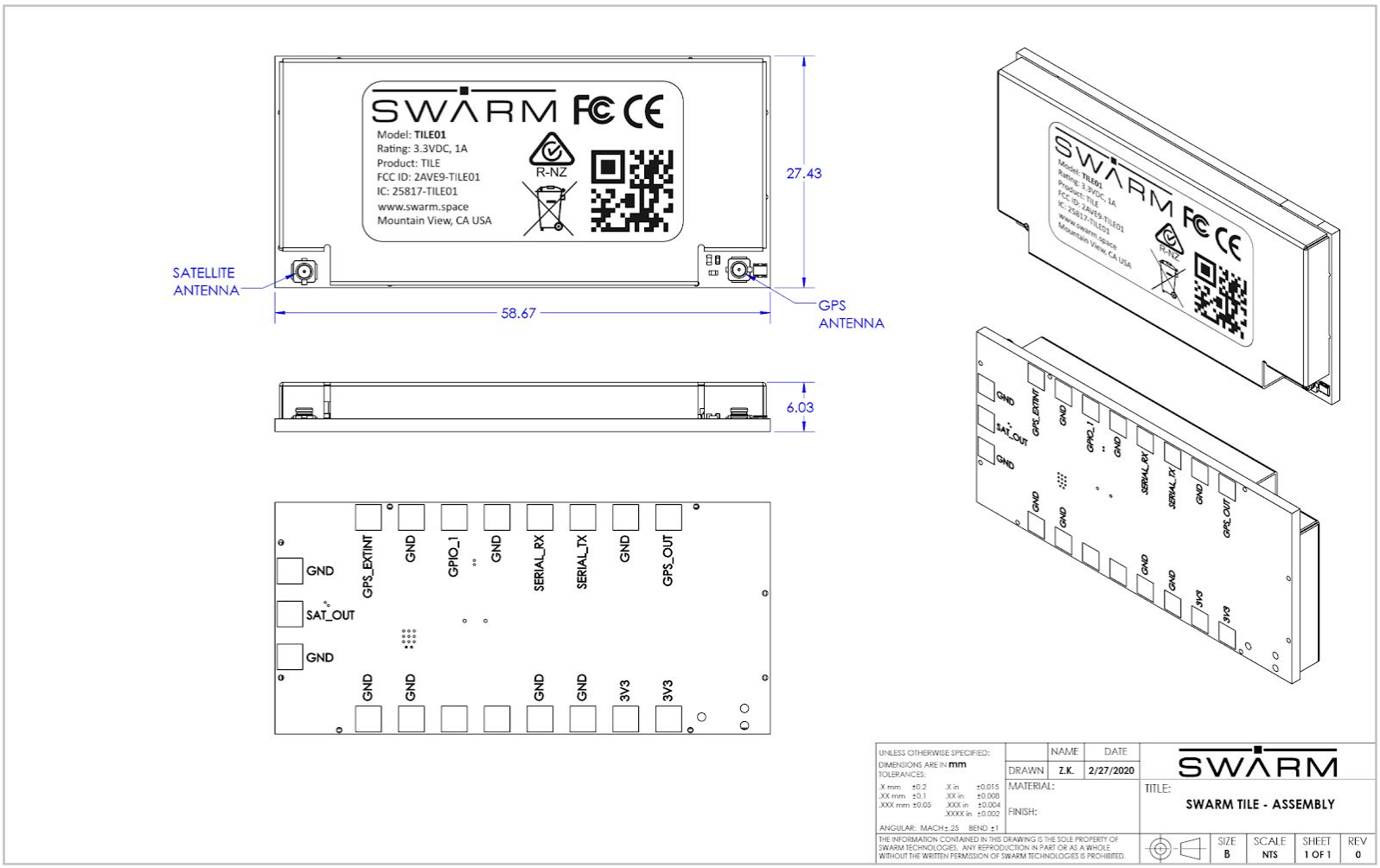

Figure 1: Tile front and back views

© 2020 SWARM TECHNOLOGIES

3.1 Tile Dimensions

The overall dimensions of the Tile and its weight are summarized in **Table 2**.

Parameter	Value
Length	58.67 mm
Width	27.43 mm
Height	6.03 mm
Weight	10 g

Table 2: Tile Mechanical Dimensions and Weight

3.2 Environmental

The environmental specifications of the Tile are summarized in **Table 3** below.

Parameter	Value
Operating Temperature Range	-55 °C to +130 °C
Survivable Temperature Range	-220 °C +160 °C
Operating Humidity Range	0% to 95%, non-condensable
Survivable Humidity Range	0% to 95%, non-condensable

Table 3: Environmental Specifications

3.2 Mechanical Specification – Mounting

The Tile must be fitted within an enclosed host system. The Tile is designed to be soldered directly to a PCB, and is provided with solder pads on its underside.

© 2020 SWARM TECHNOLOGIES

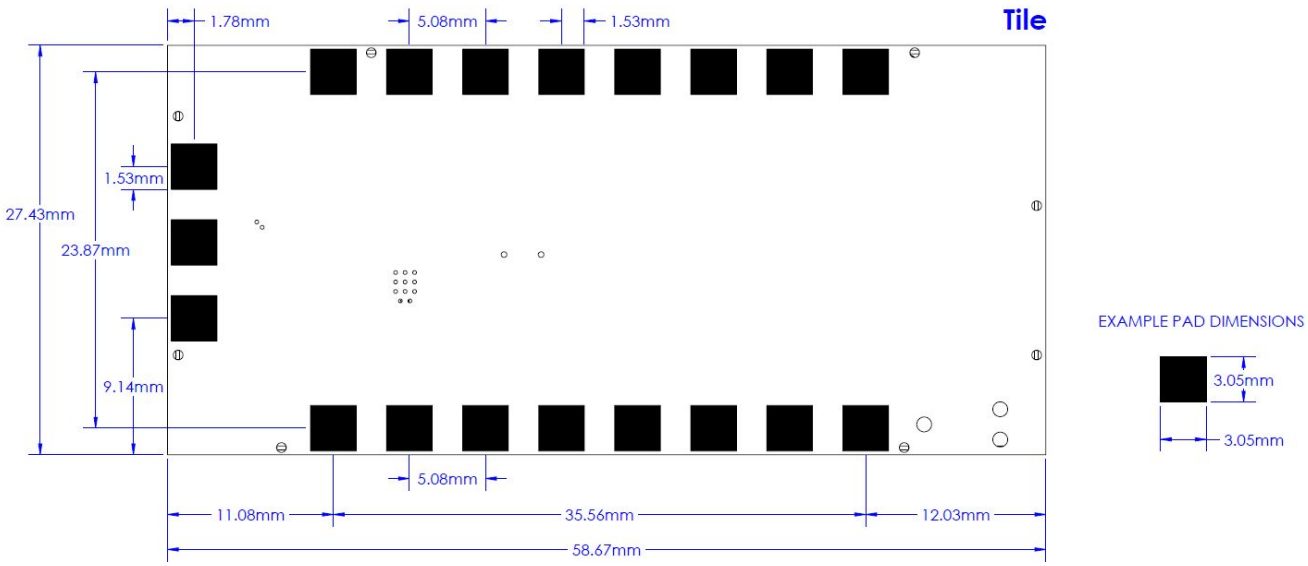

Figure 2: Location of solder pads on the underside of the Tile

3.3 Reflow Soldering

The Tile is designed to be reflow soldered onto a PCB. A recommended reflow profile can be found below in **Figure 3** and **Table 4**

Use of "No Clean" soldering paste is strongly recommended, as it does not require cleaning after the soldering process has taken place. The paste listed in the example below meets these criteria:

Soldering Paste: M8 SAC305 / PN#89268 (AIM Solder)
Alloy specification: Sn 95.5/ Ag 4/ Cu 0.5 (96.5% Tin/ 3% Silver/ 0.5% Copper)
Melting Temperature: 217° C
Stencil Thickness: 100 to 150 µm for base boards

© 2020 SWARM TECHNOLOGIES

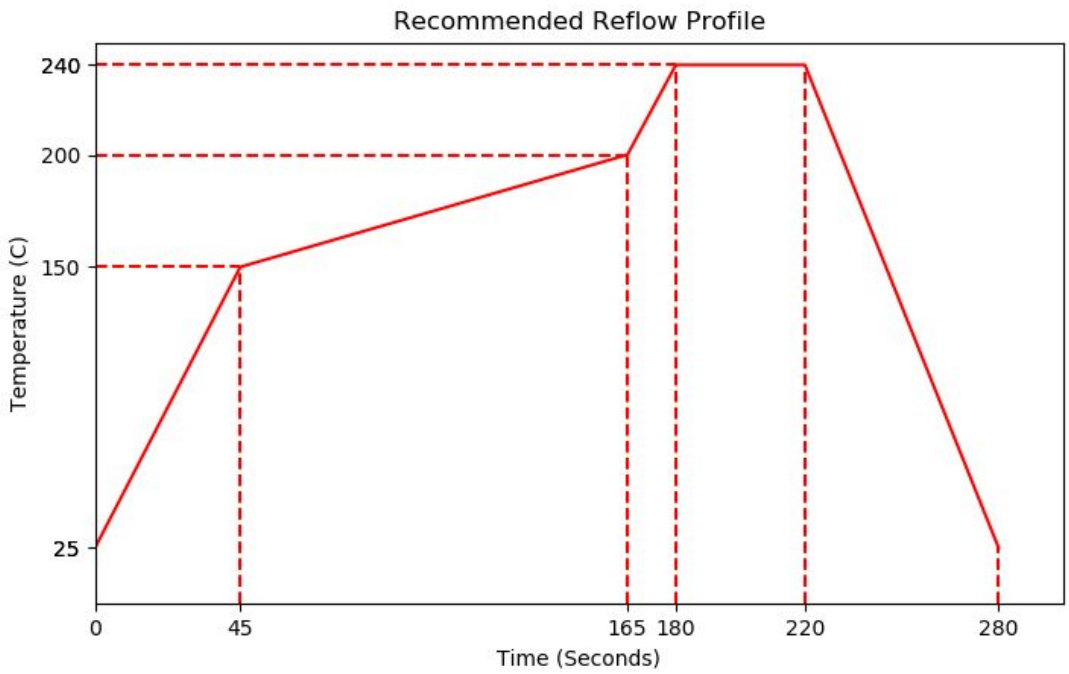

Figure 3: Recommended reflow profile for lead-free solder paste

Time (Seconds)	Temperature (℃)
0	25
45	150
165	200
180	240
220	240
280	25

Table 4: Data points for reflow soldering

© 2020 SWARM TECHNOLOGIES

3.4 Physical Interface Connectors

The Tile incorporates two connectors:

- A GPS Antenna U.FL male connector [TE Connectivity #1909763-1]
- An RF Antenna U.FL male connector [TE Connectivity #1909763-1]

© 2020 SWARM TECHNOLOGIES

4 Electrical Interfaces

The following subsections contain information for the electrical interfaces of the Tile. The RF interfaces are covered in section 5.

4.1 User Connector

The user connector provides the following required connections to the Tile:

• DC power supply input, 3.3V, 1000 mA peak

• Serial data interface

4.2 Tile Pin Allocation

The pin numbering scheme of the Tile is shown in **Figure 4**. The module pins allow soldering onto a printed circuit board (PCB) using standard reflow soldering techniques. The pin function assignment is given in **Tables 5** and **6**. Multiple supply grounds are provided and all supply and supply grounds are required to be connected to the power supply in order to limit the current on any one pin. Multiple signal grounds are provided to reduce cross-talk. Pins 13 and 14 are intentionally left empty, and have no function.

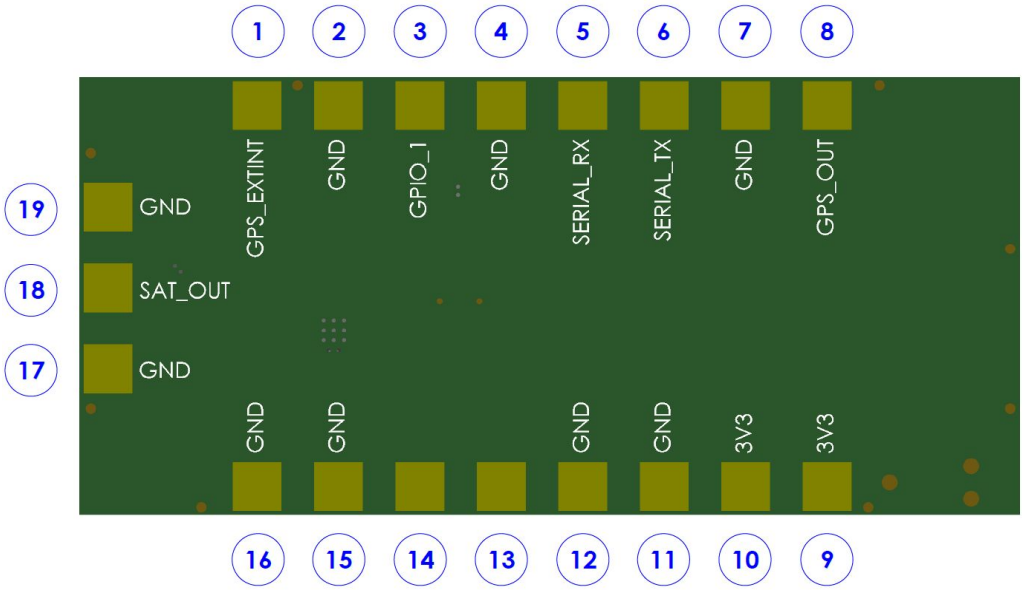

Figure 4: Tile pinout and pin numbers

© 2020 SWARM TECHNOLOGIES

Pin Number	Name	Type	Description
1	GPS_EXTINT	Not Connected	RESERVED - DO NOT CONNECT
2	GND	Ground	Ground
3	GPIO_1	Input/Output	General purpose input/output
4	GND	Ground	Ground
5	SERIAL_RX	Input	3.3V serial receive
6	SERIAL_TX	Output	3.3V serial transmit
7	GND	Ground	Ground
8	GPS_OUT	RF	External GPS antenna connection
9	3V3	VCC	3.3V at up to 1000mA
10	3V3	VCC	3.3V at up to 1000mA
11	GND	Ground	Ground
12	GND	Ground	Ground
13	N/A	Not Connected	Intentionally left empty
14	N/A	Not Connected	Intentionally left empty
15	GND	Ground	Ground
16	GND	Ground	Ground
17	GND	Ground	Ground
18	SAT_OUT	RF	External satellite radio antenna connection
19	GND	Ground	Ground

Table 5: Tile pin numbers and descriptions

© 2020 SWARM TECHNOLOGIES

Additional Notes

Pin Number	Note
3	Connection is unbuffered directly to a GPIO on the Tile processor. Configuration will be provided via Tile firmware. GPIO pin is 3.3V tolerant, with a sink/source current limit of ±8 mA (±20 mA with a relaxed VOL/VOH)
8	If not using the provided U.FL connector, a 50Ω impedance path must be provided to a non-powered external GPS antenna.
9, 10	The 3.3V connection points are in parallel with one another and provide the primary radio, amplifier, and system voltage which is always required. If the designer wants to enable a complete power off mode, an electronic switch can be provided here.
18	If not using the provided U.FL connector, a 50Ω impedance path must be provided to the external VHF antenna.

Table 6: Additional notes on pin numbers

4.3 DC Power Interface

The DC power interface consists of the DC power inputs as summarized in **Table 7**. The +3.3V inputs and ground supply returns are used to supply DC power to the Tile and ensure that enough current can be drawn across the connector without the Tile malfunctioning during transmit due to lack of current supply. In addition, the +3.3V inputs are used to supply DC power to the Tile to operate its microcontroller as well as receive signals. All power and ground pins should be connected externally. The power requirements apply to DC power measured at the Tile user connector input and not at the output of the power supply. Long power supply cables can cause a voltage drop sufficient to cause the voltage to be out of specification at the physical power supply input to the Tile.

© 2020 SWARM TECHNOLOGIES

Name	Description	Min	Typ	Max	Unit
VCC	Module supply voltage	2.8	3.3	3.5	V
ICC (3.3V)	Current consumption - Sleep Mode	21.6	23.7	32.8	µA
	Current consumption - Receiver Active	29.7	31.6	34.1	mA
	Current consumption - Geolocation Mode*	51.1	53.7	55.2	mA
	Current consumption - Transmitter on	740	743	745	mA
ICC (3.5V)	Current consumption - Sleep Mode	27.3	28.0	28.0	µA
	Current consumption - Receiver Active	30.3	32.8	36.1	mA
	Current consumption - Geolocation Mode*	50.8	52.9	54.8	mA
	Current consumption - Transmitter on	725	728	732	mA

Table 7: Power supply characteristics for 2.8, 3.3, and 3.5V supplies to the Tile

*Includes receiver active current with GPS in acquisition mode. Tile enters into Geolocation mode for approximately 30 seconds after exiting from sleep mode, on powerup, or every 3 hours the Tile is continuously powered on and not in sleep mode.

An example of the interface between a Tile and a third-party host device is shown in **Figure 5.** A photo of a Tile integrated onto a third party device can be found in **Figure 6.**

© 2020 SWARM TECHNOLOGIES

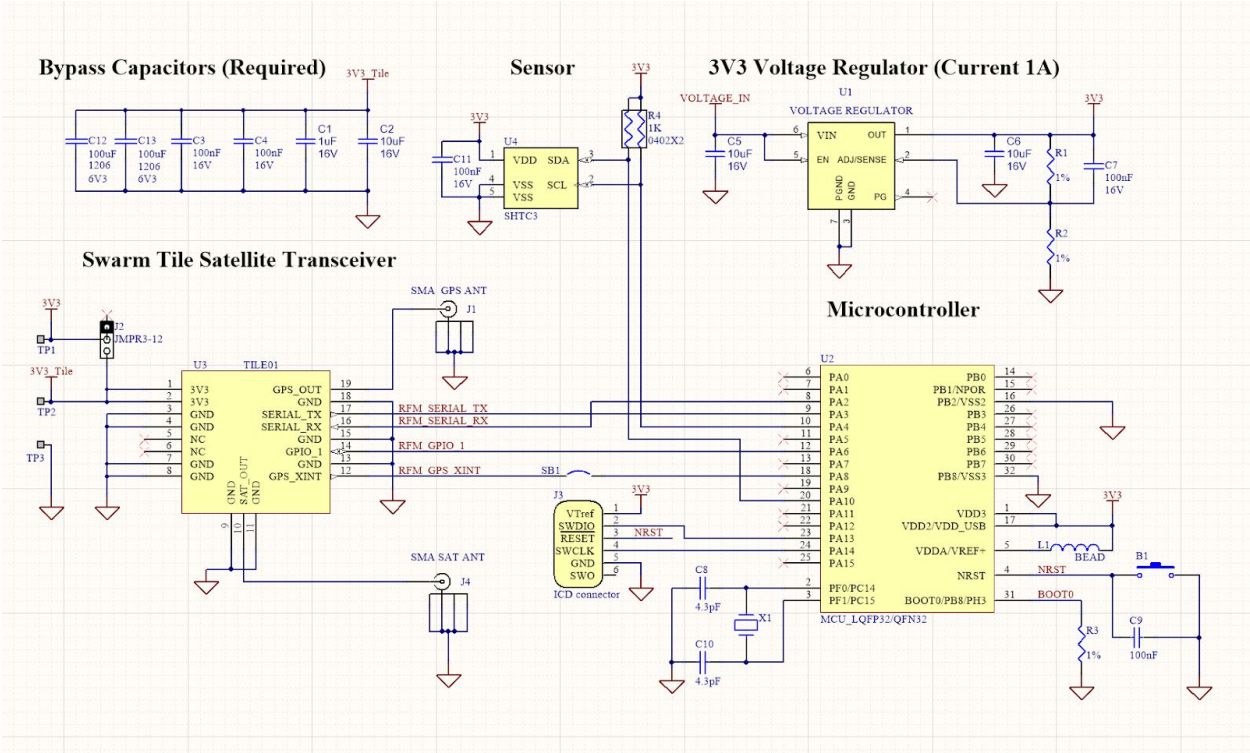

Figure 5: Sample hardware integration for Tile

Figure 6: Example integration of a Tile

© 2020 SWARM TECHNOLOGIES

4.4 Power On/Off Control

The Tile can be externally switched on/off by an user-supplied power switch on the 3V3 power inputs. When a Tile has been turned off, power should not be restored until more than 1 second has elapsed. Additionally, if a unit does not respond to software commands, power off the module, wait for at least 1 second and then power it back on. If the 1 second minimum wait time is not adhered to, the reset circuit may not operate and the Tile could be placed in a non-operational state. The state is not permanent and can be rectified by the above procedure.

4.5 Serial Data Interface

The interface is a CMOS serial UART 3-wire (Serial Rx, Serial Tx, and Ground) interface at 3.3V digital signal levels over which the Tile transfers commands, responses, and message data. The default serial communication parameters are:

- Baud rate: 115200
- Data Bits: 8 Bits
- Parity: None
- Stop bits: 1 Bit
- Flow Control: None

© 2020 SWARM TECHNOLOGIES

5 RF Interface

This section describes the physical characteristics of the RF connectors and specifications of the RF Interface.

5.1 RF Connectors

The Tile RF and GPS connectors are male U.FL connectors [TE Connectivity Part Number 1909763-1]. This is a surface mount connector that is directly attached to the Tile.. A Swarm VHF antenna must be used, as third party antennas will not be tuned well enough to provide enough gain and resonance in the specified frequency range of 138 to 150 MHz. Swarm antennas are tuned for a VSWR of 1.8 or better at both 137 MHz and 150 MHz.

5.2 Antenna Implementation

For illustrative purposes, a picture of two example Swarm antennas is shown in **Figure 7**

Figure 7: Swarm Coiled ¼ Wave 8.5”antenna and ½ Wave antenna

© 2020 SWARM TECHNOLOGIES

5.2.1 Antenna Characteristics

The Tile is certified with the following antennas as described in **Tables 8** and **9**. No power reduction compensation is required for use with these antennas.

Swarm Coiled ¼ Wave 8.5” Antenna	
Parameter	**Value**
Length	21.5 cm
Diameter (Connector)	11.2 mm
Diameter (along major length)	7.6 mm
Weight	31.5 g
Operating Temperature	-60 °C to +130 °C
Operating Humidity	0-100% humidity, condensable
Impedance	50 Ohms nominal
Polarization	Linearly Polarized
VSWR (in Swarm Bands)	1.8
Gain	2.0 dBi
Frequency	137.000-138.000 MHz (RX) 148.000-150.000 MHz (TX)
Connector	SMA male
Antenna Classification	Mobile, Fixed
Minimum separation distance from body	29cm

Table 8: Antenna characteristics for Swarm Coiled ¼ Wave 8.5” Antenna

© 2020 SWARM TECHNOLOGIES

Swarm ½ Wave Antenna	
Parameter	**Value**
Length	108.5 cm
Diameter (Connector)	40.7 mm
Diameter (along major length)	3.3 mm
Weight	150g
Operating Temperature	-60 °C to +130 °C
Operating Humidity	0-100% humidity, condensable
Impedance	50 Ohms nominal
Polarization	Linearly Polarized
VSWR (in Swarm Bands)	1.8
Gain	2.15 dBi
Frequency	137.000-138.000 MHz (RX) 148.000-150.000 MHz (TX)
Connector	NMO Female
Antenna Classification	Mobile, Fixed
Minimum separation distance from body	29cm

Table 9: Antenna characteristics for Swarm 1/2-wave Antenna

In addition, a GPS antenna is required. Any active or passive GPS antenna with an appropriate connection to the Tile's U.FL male connector or via the GPS_OUT pin is acceptable for use. One such example of a passive antenna is: [Molex Part Number 1461860300]

5.3 RF Trace Layout Design

The Tile is certified with a PCB edge SMA connectors [Samtec Part Number SMA-J-P-H-ST-EM1] for the RF and GPS outputs, with a micro-strip trace layout (along with copper keep-out areas) as shown in **Figures 8 and 9**. The thicknesses of the PCB layers is shown in **Figure 10**. Although the figure shows an example 4 layer PCB only the top and inner layer 1 are strictly required.

© 2020 SWARM TECHNOLOGIES

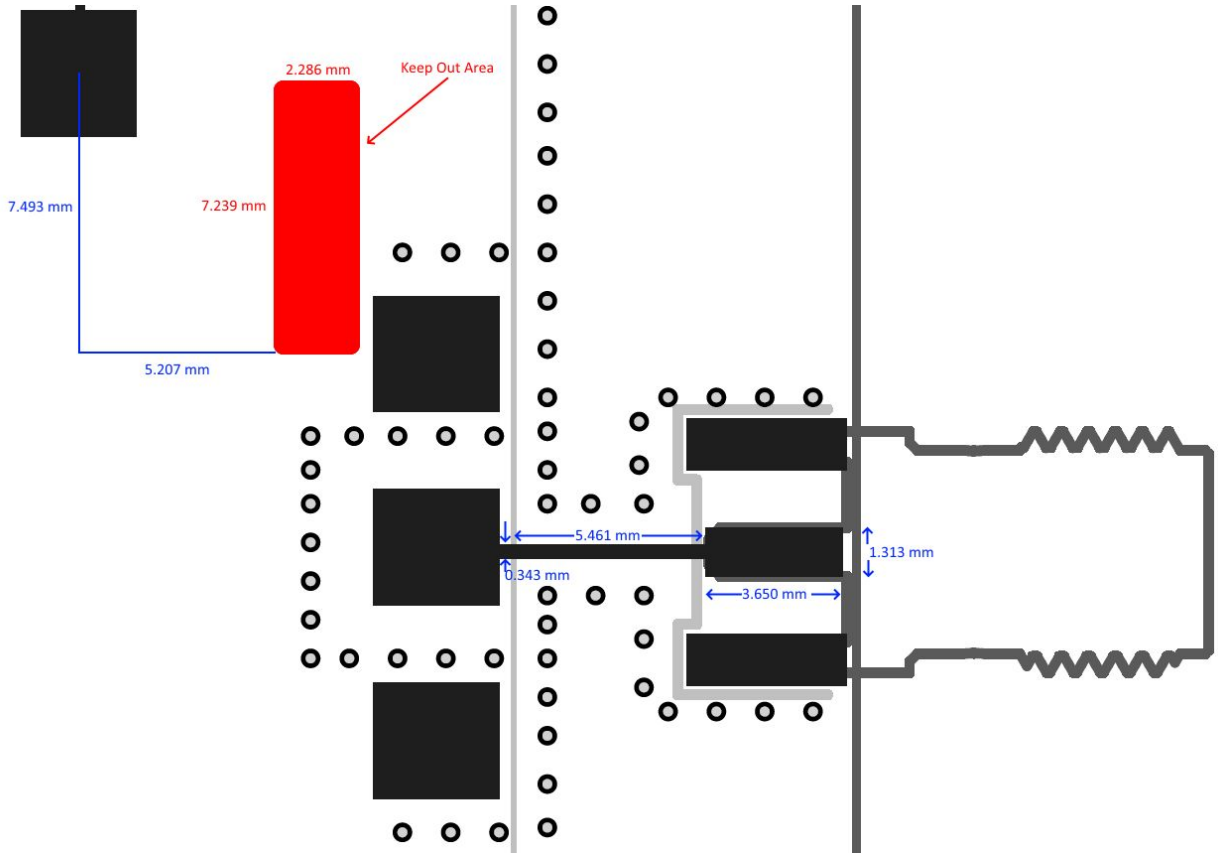

Figure 8: RF trace routing and keep out area for RF output (top layer)

© 2020 SWARM TECHNOLOGIES

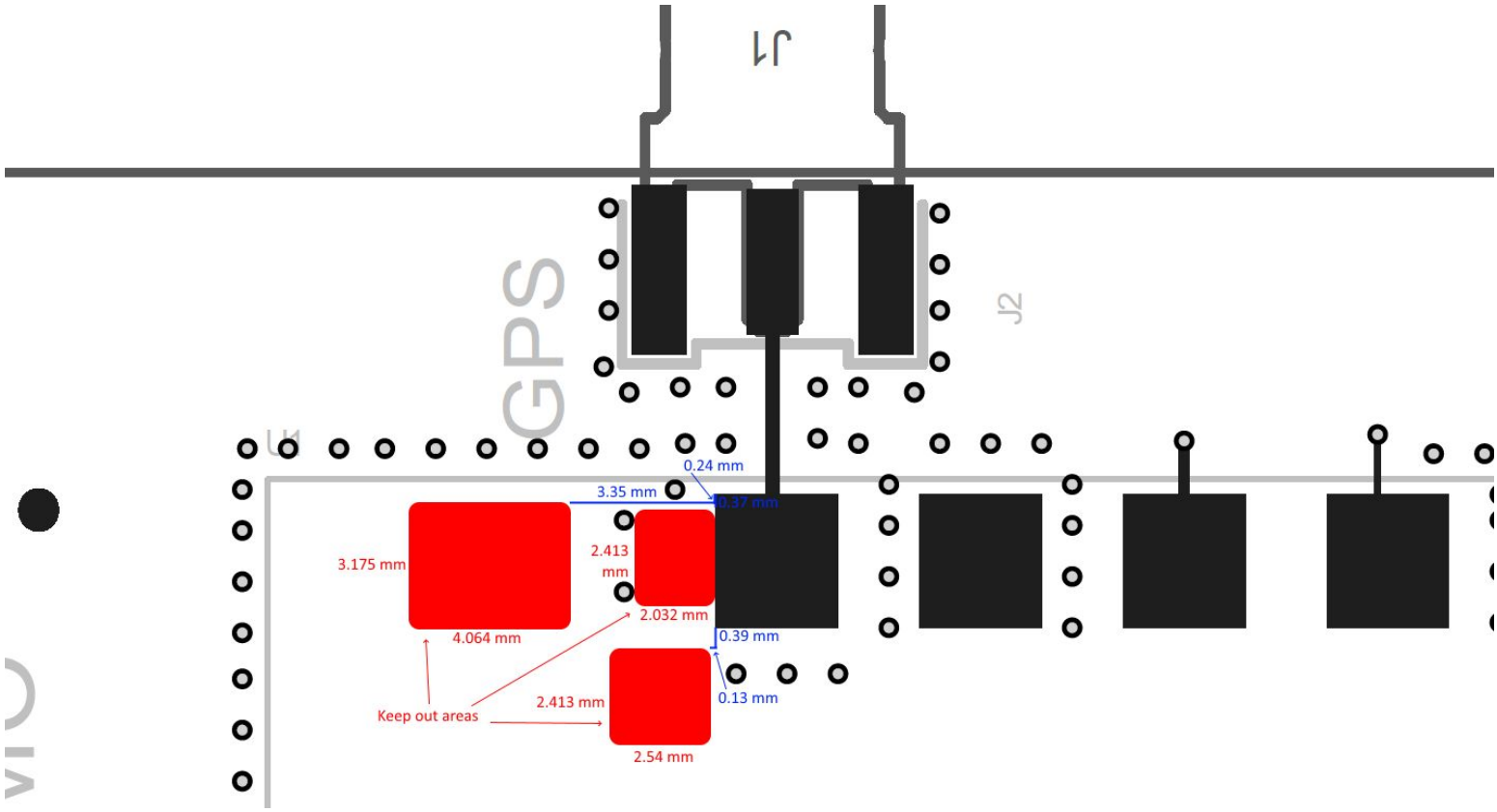

Figure 9: GPS trace routing and keep out areas (top layer)

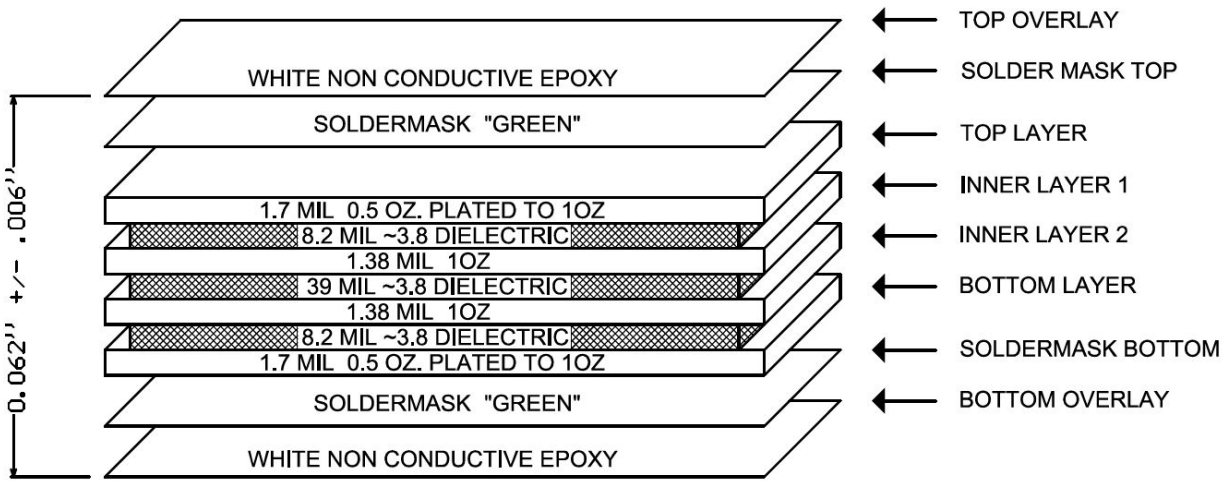

Figure 10: PCB buildup and layer thicknesses for certified PCB

© 2020 SWARM TECHNOLOGIES

6 Software interface

Message types

The Tile transmits two types of messages:

- Unsolicited messages, which include status messages, date/time and GPS information, and notifications that messages have been received by the Tile
- Command responses, which include responses to message and power management commands, as well as notifications that messages have been sent or settings have been updated

General command structure

All messages to and from the Tile are NMEA formatted messages. NMEA messages begin with a `$` and end with a single newline `'\n'` character. Ina addition, the last three characters prior to the newline are `*xx` where `xx` is a checksum of the characters in the command from next character after the `$` up to, but not including, the `*`. The checksum is the same as used by NMEA. Messages with a bad checksum are silently ignored and are not stored anywhere.

A `$` will never occur within a command, and may be used to reset the receiving state machine.

A `*` may occur within a command. The receiving state machine will verify the last three characters in the command are `*xx` after the `\n` is received. The `x` may be any legal ASCII character in the range `0..9`, `A..F`, or `a..f`.

An example command is provided below to illustrate the command structure. The below command returns the most recent datetime message from the Tile:

```
$DT @*70
```

Command timing

Once the `$` is received, the next character must occur within 5 milliseconds of the previous character. If the inter-character delay exceeds 5 ms, the command will be silently discarded, and the receiving state machine will consume and ignore any characters received until the next `$`.

© 2020 SWARM TECHNOLOGIES

Additional notes

The user application connected to the Tile should ignore any characters received from the tile after startup until the `$TILE BOOT,RUNNING*49` string is received. The bootloader will output messages as it starts up. These messages include, but are not limited to: status messages, firmware update progress messages, and error messages.

© 2020 SWARM TECHNOLOGIES

6.1 Unsolicited Messages

Date/time

This message indicates the current date/time obtained from the Tile's GPS. This message is not sent until the GPS has obtained a fix sufficient to set its internal date and time. If the GPS loses its fix, the message is sent with a flag indicating an invalid state. Date/time messages can be enabled or disabled using the `$DT` or `$OP` command.

```
$DT <YYYY><MM><DD><hh><mm><ss>,<flag>*xx
```

Parameter	Description
`YYYY`	Year (1970..2038)
`MM`	Month (01..12)
`DD`	Day (01..31)
`hh`	Hour (00..23)
`mm`	Minutes (00..59)
`ss`	Seconds (00..59)
`flag`	`I` Date/time is invalid `V` Date/time is valid

© 2020 SWARM TECHNOLOGIES

Tile status

Status messages indicate that the Tile has booted and acquired date/time and position information from the GPS network. Error and debug messages are also sent as status messages. Tile status messages cannot be disabled.

```
$TILE <msg>,[<data>]*xx
```

Parameter	Description
msg	BOOT Tile has booted and is ready to receive commands DATETIME Tile has acquired date/time from the GPS network POSITION Tile has acquired position from a valid 3D fix from the GPS network ERROR Error message (typically text) DEBUG Debug message (typically text)
data	RUNNING The Tile is running and can now accept commands POWERON The Tile has detected power applied to it UPDATED A firmware update was performed FAULT A firmware crash occurred and the Tile restarted

Notes:

A data message follows the BOOT message to indicate the reason for the startup. The DATETIME will be sent once the GPS has acquired the date/time from the GPS network. The POSITION will be sent once a valid 3D fix has been acquired from the GPS network. The POSITION message will typically occur before the DATETIME message. Depending on the GPS signal quality, it may take several minutes before the DATETIME or POSITION message is emitted.

© 2020 SWARM TECHNOLOGIES

Geospatial information

This message provides standard NMEA-formatted positional information, including latitude, longitude, altitude, course, and speed. Geospatial information messages can be enabled/disabled using the `$GN` or `$OP` command.

```
$GN <latitude>,<longitude>,<altitude>,<course>,<speed>*xx
```

Parameter	Description
`latitude`	Latitude in d.ddddddd format (float). The latitude is presented in the N basis (negative latitudes are in the southern hemisphere)
`longitude`	Longitude in d.ddddddd format (float). The longitude is presented in the E basis (negative longitudes are in the western hemisphere)
`altitude`	Altitude in meters to one decimal point (float)
`course`	Course in degrees to one decimal point (0..359.9) (float). Course proceeds clockwise, with 0.0=north, 90.0=east, 180.0=south, and 270.0=west
`speed`	Speed in kilometers per hour to one decimal point (0.0..999.9) (float)

© 2020 SWARM TECHNOLOGIES

GPS fix quality

This message provides a standard NMEA-formatted description of the type of GPS fix currently in use. GPS fix quality messages can be enabled/disabled using the `$GS` or `$OP` command.

```
$GS <hdop>,<vdop>,<gps_sats>,<fix_type>*xx
```

Parameter	Description
`hdop`	Horizontal dilution of precision (integer *100)
`vdop`	Vertical dilution of precision (integer *100)
`gps_sats`	Number of GPS satellites used in solution (integer)
`fix_type`	`NF` No fix `DR` Dead reckoning only solution `G2` Standalone 2D solution `G3` Standalone 3D solution `D2` Differential 2D solution `D3` Differential 3D solution `RK` Combined GPS + dead reckoning solution `TT` Time only solution

© 2020 SWARM TECHNOLOGIES

GPS spoofing indicator

This message provides a standard NMEA-formatted value of the quality of GPS signals received. GPS spoofing indicator messages can be enabled/disabled using the `$GS` or `$OP` command.

```
$GJ <flag>,<value>*xx
```

Parameter	Description
`flag`	`0` Spoofing unknown or deactivated `1` No spoofing indicated `2` Spoofing indicated `3` No reliable GNSS position fix (likely due to spoofing)
`value`	Value ranging from 0 to 255 indicating how much spoofing the Tile detects. 0 = no spoofing, 255 = 100% spoofing

Received data

This message contains ASCII-encoded hexadecimal data received from the Swarm network. Received messages can be enabled/disabled via the `$OP` command.

```
$RD <data>*xx
```

Parameter	Description
`data`	ASCII-encoded hexadecimal data in packet

© 2020 SWARM TECHNOLOGIES

6.2 Commands and Responses

Date/time

This command repeats the most recent `$DT` message, or queries or sets the `$DT` message rate.

`$DT <@|?|<rate>>*xx`

Parameter	Description
`@`	Repeat most recent `$DT` message
`?`	Query current `$DT` rate
`rate`	Disable or set rate of `$DT` messages

Returns one of:

Value	Description
`$DT <YYYY><MM><DD><hh><mm><ss>,<flag>*xx`	The most recent `$DT` message. `<flag>` will return as `V` (valid) or `I` (invalid)
`$DT <rate>*xx`	The current `$DT` rate
`$DT OK*xx`	Parameters updated successfully
`$DT ERR*xx`	An error response

Notes:

For the query option, the return value of `$DT <rate>*xx` requires different parsing than the normal `$DT` message format. The application should check if a comma is present in the `$DT` string, and, if so, assume it is the standard date/time format. If no comma is present and the value is a number, then the value is the rate being returned in response to the `$DT ?` query.

© 2020 SWARM TECHNOLOGIES

`<rate>` is a value between 1 and 2147483647 (2^{31}-1). It will be the number of seconds in between each message.

An `OK` response confirms that the parameters have been updated in response to a command with the `<rate>` parameter. An `ERR` response indicates that additional or invalid characters were included between the `T` and the `*` of the command.

Example:

Calling the most recent date/time message:

```
$DT @*70
```

```
$DT 20190408195123,V*6d
```

Returns a date/time of `April 8th, 2019 7:51:23 PM GMT`. The date/time is `valid`

© 2020 SWARM TECHNOLOGIES

Firmware version

This command returns the Tile's firmware version.

`$FV*xx`

Returns one of:

Value	Description
`$FV <version_string>*xx`	The current firmware version
`$FV ERR*xx`	An error response

Notes:

An `ERR` response indicates that additional characters were included between the `V` and the `*` of the command.

© 2020 SWARM TECHNOLOGIES

Geospatial information

This command repeats the most recent `$GN` message, or queries or sets the `$GN` message rate.

`$GN <@|?|<rate>>*xx`

Parameter	Description
`@`	Repeat most recent `$GN` message
`?`	Query current `$GN` rate
`rate`	Disable or set rate of `$GN` messages

Returns one of:

Value	Description
`$GN <latitude>,<longitude>,<altitude>,<course>,<speed>*xx`	The most recent `$GN` message. See Geospatial Information - Unsolicited Messages for more detail on the outputs of this message
`$GN <rate>*xx`	The current `$GN` rate
`$GN OK*xx`	Parameters updated successfully
`$GN ERR*xx`	An error response

Notes:

For the query option, the return value of `$GN <rate>*xx` requires different parsing than the normal `$GN` message format. The application should check if a comma is present in the `$GN` string, and, if so, assume it is the standard geospatial information format. If no comma is present and the value is a number, then the value is the rate being returned in response to the `$GN ?` query.

`<rate>` is a value between 1 and 2147483647 (2^{31}-1). It will be the number of seconds in between each message.

© 2020 SWARM TECHNOLOGIES

An `OK` response confirms that the parameters have been updated in response to a command with the `<rate>` parameter. An `ERR` response indicates that additional or invalid characters were included between the `N` and the `*` of the command.

Example:

Calling the most recent GPS message:

```
$GN @*69
```

```
$GN 37.8921,-122.0155,77,89.0,0.2*0c
```

Returns a location of `37.8921N, 122.0155W`. The Tile's altitude is `77m`, its course is `89.0 degrees`, and it is moving at `0.2 kilometers per hour`.

© 2020 SWARM TECHNOLOGIES

GPS Fix Quality

This command repeats the most recent `$GS` message, or queries or sets the `$GS` message rate.

`$GS <@|?|<rate>>*xx`

Parameter	Description
`@`	Repeat most recent `$GS` message
`?`	Query current `$GS` rate
`rate`	Disable or set rate of `$GS` messages

Returns one of:

Parameter	Description
`$GS <hdop>,<vdop>,<gps_sats>,<fix>*xx`	The most recent `$GS` message. See GPS Fix Quality - Unsolicited Messages for more detail on the outputs of this message
`$GS <rate>*xx`	The current `$GS` rate
`$GS OK*xx`	Parameters updated successfully
`$GS ERR*xx`	An error response

Notes:

For the query option, the return value of `$GS <rate>*xx` requires different parsing than the normal `$GS` message format. The application should check if a comma is present in the `$GS` string, and, if so, assume it is the standard geospatial information format. If no comma is present and the value is a number, then the value is the rate being returned in response to the `$GS ?` query.

`<rate>` is a value between 1 and 2147483647 (2^{31}-1). It will be the number of seconds in between each message.

© 2020 SWARM TECHNOLOGIES

An `OK` response confirms that the parameters have been updated in response to a command with the `<rate>` parameter. An `ERR` response indicates that additional or invalid characters were included between the `S` and the `*` of the command.

Example:

Setting the rate for geospatial information messages to 1:

```
$GS 1*05
```

```
$GS OK*30
```


© 2020 SWARM TECHNOLOGIES

Manage received messages

This command enables management of received messages.

`$MM <C=<U|*>|<D=<msg_id|*>|<M=<msg_id>|*>|R=<msg_id|O|N>>*xx`

Parameter	Description
`C=<U|*>`	Return count of unread (`U`) or all (`*`) messages
`D=<msg_id|R|*>`	Delete message ID (`msg_id`), all read (`R`), or all (`*`) messages
`M=<msg_id|*>`	Mark message ID (`msg_id`) or all (`*`) as read
`R=<msg_id|O|N>`	Read message ID (`msg_id`), oldest (`O`), or newest (`N`)

Returns one of:

Value	Description
`$MM OK*xx`	Delete message command succeeded
`$MM ERR,BADPARAM*xx`	Invalid command or argument to `$MM` command
`$MM ERR,DBXINVMSGID*xx`	Invalid message ID in `D` or `R` command
`$MM ERR,DBXNOMORE*xx`	No more messages when using `R=<O|N>` command
`$MM DELETED,<msg_id>*xx`	`<msg_id>` deleted successfully
`$MM MARKED,<msg_id>*xx`	`<msg_id>` marked as read successfully
`$MM <msg_count>`	Number of messages read/all/deleted (1)
`$MM <data>,<msg_id>,<es>`	Response to reading a message (2)

Notes:

© 2020 SWARM TECHNOLOGIES

Messages have three states: unread, read, and deleted. Once an unread message is read, its state changes to read. It can subsequently be read again. If a message is deleted, it can no longer be read. `All` in the above context means both read and unread messages, but does not include messages that have been deleted.

If a message is marked read using the `M=<msg_id>` or `M=*` command, marking it as read again is not an error.

The GPIO1 pin can be configured to indicate whether or not unread messages are pending (see the `$OP GP=<mode>` command).

(1) `<msg_count>` is a number indicating the number of messages that are unread in response to the `C=U` command, total number of read and unread messages in response to the `C=*` command, and the number of messages deleted in response to the `D=*` command.

(2) `<data>` is in the same format as an unsolicited `$RD` message. `<msg_id>` is the message ID. The message ID should be treated as a simple arbitrary number. `<es>` is the epoch seconds time when the message was received by the Tile.

© 2020 SWARM TECHNOLOGIES

Disable/enable messages

This command allows selective disabling/enabling of messages from the Tile, as well as setting parameters including message delivery preferences, controlling the GPIO1 pin, and controlling the red and green LEDs.

`$OP <?|p1=<val>[,p2=<val>[,...]]]*xx`

Parameter	Description
`?`	Display current settings
`DT=0|<rate>`	Disable or set rate of `$DT` messages
`GJ=0|<rate>`	`Disable or set rate of `$GJ` messages
`GN=0|<rate>`	Disable or set rate of `$GN` messages
`GP=<gpio1_mode>`	Set `GPIO1` pin mode
`GS=0|<rate>`	Disable or set rate of `$GS` messages
`LG=<led_mode>`	Set operating mode for green LED
`LR=<led_mode>`	Set operating mode for red LED
`MD=I|P`	Set msg delivery immediate (default) or polled

Returns one of:

Value	Description
`$OP OK*xx`	Parameters updated successfully
`$OP ERR*xx`	An error response

Notes:

The `?` option allows reading back the current settings. This is a comma separated list of all options. NOTE: Options are in alphabetical order, therefore as new options are added, they may

© 2020 SWARM TECHNOLOGIES

appear in the middle of the string. The user application should NOT rely on any given option being at any given position; the string should be parsed using the comma as a delimiter, and the desired option retrieved by name. Note that the `TM` option does not appear in the output string.

`<rate>` is a value between 1 and 2147483647 (2^{31}-1). It will be the number of seconds in between each message. The default rate for each message type is 60 (once per minute). Messages for `DT`, `GN`, `GJ`, and `GS` will not be emitted to the user until the GPS has obtained a fully resolved fix.

The `GP` option allows specifying how the GPIO1 pin will operate. The available modes are:

Mode	Description
`0`	Analog, pin is internally disconnected and not used (default)
`1`	Input, low-to-high transition exits Tile sleep mode
`2`	Input, high-to-low transition exits Tile sleep mode
`3`	Output, low indicates Tile is in sleep mode (1)
`4`	Output, high indicates Tile is in sleep mode (1)
`5`	Output, low indicates Tile is in sleep mode (2)
`6`	Output, high indicates Tile is in sleep mode (2)
`7`	Output, low indicates Tile has messages pending for client (3)
`8`	Output, high indicates Tile has messages pending for client (3)
`9`	Output, set low (4)
`10`	Output, set high (4)

It is the responsibility of the client to provide the appropriate pull-up or pull-down resistors. The output modes are open drain.

(1) - If either of these modes are selected, the pin will be set to the selected state after the client has issued the `$SL` command. The pin will continue to indicate the sleep state during the times the Tile wakes to perform any internal housekeeping functions, and return to the awake state

© 2020 SWARM TECHNOLOGIES

only if the the sleep mode is terminated by the `S` or `T` parameter being reached, a GPIO wakeup (if configured), or activity on the serial RX line.

(2) - If either of these modes are selected, the pin will be set to the selected state after the client has issued the `$SL` command. The pin will change to the awake state if the sleep mode is terminated (as described in (1), or when then Tile wakes to perform internal house- keeping functions. In the latter case, the pin will return to the sleep mode indication once the Tile has completed its house-keeping functions and returns to sleep.

(3) - If either of these modes are selected, the pin will indicate if the Tile has received one or more unread messages and is holding them for the client. If multiple messages are pending for the client, the pin will maintain the state until all messages have been read. This is only supported when the `MD=P` option is specified.

(4) - These two variations allow the user application to use GPIO1 as a general purpose output.

Example:

Setting the GPIO1 pin to wake on a high-to-low transition:

```
$OP GP=2*27
```

```
$OP OK*3b
```

The `LG` option sets the operating mode for the green LED. The available modes are:

Mode	Description
`0`	LED is off
`1`	LED is on
`2`	LED blinks 1 sec on/1 sec off until GPS fix acquired
`3`	LED follows GPS 1PPS output
`4`	LED is on when VHF radio is transmitting
`5`	LED is on when VHF radio is has received packet
`6`	LED is on when Tile is awake (1)
`7`	LED is heartbeat indicator (50ms on/4950ms off)

© 2020 SWARM TECHNOLOGIES

(1) - The LED will be lit when the Tile is awake, in both the user mode and system mode. If the Tile is not put to sleep with the `$SL` command, the LED will remain on. If the Tile is put to sleep with the `$SL` command, the LED will be lit if the Tile wakes to perform internal housekeeping tasks.

The `LR` option sets the operating mode for the red LED. Please see the `LG` option for the available modes.

The `MD` option allows setting whether messages received from the Swarm network are delivered immediately upon reception, or if they must be polled for by the user via the `$RD` command. When `MD` is set to `I`, messages are delivered immediately via the unsolicited `$RD` message. When `MD` is set to `P`, the user periodically needs to issue the `$RD` command with one of the appropriate parameters.

The parameters are only updated if `OK` is returned. Should an error occur in one or more parameters, `ERR` is returned and none of the parameters are updated. These settings are not retained across a restart of the Tile.

© 2020 SWARM TECHNOLOGIES

Restart Tile

This command restarts the Tile.

`$RS*xx`

Returns one of:

Value	Description
`$RS OK*xx`	Command has been accepted and the Tile will immediately perform a hardware restart
`$RS ERR*xx`	An error message

Notes:

An `OK` response confirms that the Tile will successfully restart. An `ERR` response indicates that additional or invalid characters were included between the `S` and the `*` of the command.

© 2020 SWARM TECHNOLOGIES

Sleep mode

This command puts the Tile into a low-power sleep mode.

`$SL [S=<seconds>|U=<[YYYY-MM-DD ]hh:mm:ss>]*xx`

Parameter	Description
`S=<seconds>`	Sleep for this many seconds
`U=<[YYYY-MM-DD ]hh:mm:ss>`	Sleep until date (optional) and time

Returns one of:

Value	Description
`$SL OK*xx`	Sleep period accepted, Tile is now non-responsive
`$SL WAKE,<cause>*xx`	Tile has woken from selected sleep mode
`$SL CLOCKNOTSET*xx`	Clock not yet set from GPS
`$SL ERR*xx`	Invalid number of seconds or date/time value
`$SL NOCOMMAND*xx`	No `S` or `U` parameter is present
`$SL ERR,NOTIME*xx`	Attempt to sleep before time is set

The `S` parameter is the number of seconds to sleep. This value may range from 5 to 31536000 (approximately 1 year) seconds. A value not within this range will return `$SL ERR`. If the command is accepted, the Tile will emit `$SL OK` and enter sleep mode for the requested duration.

The `U` parameter is a time and optional date the Tile should sleep until and then wake. If the date is not specified and the time to sleep until is less than the current time, the time is presumed to be in the next day. For example, if the current time is 11:00:00 and `$SL U=09:00:00` is issued, the Tile will wake 22 hours from now. If a date and time are specified, and that date/time is before the current date/time, `$SL WAKE` will be immediately issued.

© 2020 SWARM TECHNOLOGIES

The `$SL WAKE,<cause>` message is emitted after the Tile wakes from a user commanded sleep mode (as opposed to the Tile waking to perform internal housekeeping and then returning to sleep). The value of `cause` will be one of the following:

Cause	Description
`GPIO`	GPIO input changed from inactive to active state
`SERIAL`	Activity was detected on the RX pin of the Tile's UART
`TIME`	The `S` or `U` parameter time has been reached

If UART activity wakes the Tile, the `TIMEOUT` message will not be emitted as the Tile is now awake.

In sleep mode, the real-time clock is not GPS disciplined, and is therefore subject to some degree of drift. The longer the Tile is asleep, the more the drift will accumulate. The user should be aware of this when selecting a sleep with a long duration.

If the GPIO1 pin is configured as an input to wake the Tile, the sleep mode will be terminated if activity occurs on GPIO1.

If the GPIO1 pin is configured as an output that indicates the Tile's sleep mode, GPIO1 will transition to the appropriate state if the `$SL OK` message is emitted.

Example:

Commanding the Tile to sleep for 1 minute:

```
$SL S=60*57
```

```
$SL OK*3b
```

```
$SL WAKE,TIME @ 2019-04-11 18:58:03*77
```

If the Tile receives any serial input before the planned wake time, then the Tile will wake with a message such as:

```
$SL WAKE,SERIAL @ 2019-04-11 18:57:45*6f
```


© 2020 SWARM TECHNOLOGIES

Similarly, if the GPIO1 pin is configured to wake on a high-to-low (or low-to-high) transition, then on transition on the GPIO1 pin, the Tile will also wake with a message such as:

```
$SL WAKE,GPIO @ 2019-04-11 18:57:55*7f
```


© 2020 SWARM TECHNOLOGIES

Transmit data

This command transmits data to the Swarm network.

```
$TD [HT=<hold_time>,]<[string|data]>[..<data>]*xx
```

Parameter	Description
`HT=<hold_time>`	Expiration time of message (optional, default = 172800 seconds)
`<string|data>`	1 to 200 bytes of data (ASCII string) 2 to 400 bytes (hexadecimal written as ascii)

Returns one of:

Value	Description
`$TD OK,<msg_id>*xx`	Message accepted for sending
`$TD SENT,<msg_id>*xx`	Message was received by satellite
`$TD ERR,BUSY,<msg_id>*xx`	Channel is busy
`$TD ERR,BADDATA,0*xx`	Message has odd number or non-hex characters
`$TD ERR,BADHOLDTIME,0*xx`	Invalid hold time
`$TD ERR,ERR,0*xx`	Unspecified error
`$TD ERR,EXPIRED,<msg_id>*xx`	Unable to send within requested hold time
`$TD ERR,NODEVICEID,0*xx`	The Swarm device ID has not yet been set
`$TD ERR,NOCOMMAND,0*xx`	`$TD` with no parameters was sent
`$TD ERR,NOSPACE,0*xx`	No space for message
`$TD ERR,NOTCID,0*xx`	The application ID has not yet been set
`$TD ERR,NOTIME,0*xx`	Attempt to send message before time set

© 2020 SWARM TECHNOLOGIES

`$TD ERR,QUEUEFULL,0*xx`	Queue for queued messages is full
`$TD ERR,TOOLONG,<msg_id>*xx`	Message is too large to send

Notes:

The `HT` parameter is optional but must occur before the `<data>` portion of the command.

`<hold_time>` is either the number of seconds to expire the message if it has not been sent, or an epoch second date after which the message will be expired if it has not been sent.

Hold Time Value	Description
`1` to `31536000`	The message will be considered expired if a Swarm satellite has not come into view within the specified number of seconds.
`31536001` to `1514764800`	An error message (`$TD ERR,0*xx`) is returned.
>`1514764800`	The message will be considered expired if the Tile is unable to send it before the specified time. If the specified time is greater than `1514764800` and less than or equal to the current UTC time, the message will not be queued and an expired message `$TD EXPIRED,<msg_id>*xx` will be returned immediately. Note: `1514764800` is equal to 2018-01-01 00:00:00 in epoch seconds.
None provided	A default hold time of `3600` seconds will be used.

`<string|data>` may be expressed one of two different ways. If all the data to be sent is in the ASCII character range from 0x20 (space) to 0x7e (tilde), then the data may be sent as a string. A string is specified by enclosing the data in double quotes, e.g., "Hello, world". It is permissible for the string to contain double quotes within the string, e.g., "Today is a "new" day". If the data to be sent includes one or more character outside the 0x20 to 0x7e range, then it must be specified as pairs of hex characters ('0'..'9', 'A'..'F', 'a'..'f'), and must be a multiple of 2. Sending 'Hello' as hex would be 48656C6C6F. Illegal characters or an odd number of characters will cause a `BADDATA` message to be returned.

`<msg_id>` is assigned by the Tile, and is an unsigned 64-bit value comprised of the device ID, a day of year counter, and a message of day counter. Responses that have a 0 as the message

© 2020 SWARM TECHNOLOGIES

ID indicates the message has not been placed in the queue and therefore has no ID. The value should be treated as a simple arbitrary number.

Example:

Sending a message from the Tile in ASCII:

```
$TD "Hello World!"*31
```

```
$TD OK,5354468575916*2c
```

```
$TD SENT,5354468575916*24
```

Sending a message from the Tile in HEXASCII:

```
$TD 546869732069732069 6E206865786173636969*65
```

```
$TD OK,5354468575916*2c
```

```
$TD SENT,5354468575916*24
```


© 2020 SWARM TECHNOLOGIES