# BLUEDRIVE S

## POWER FIN™

# User's Guide

**PF-240S**

## WARNING

For your own safety and that of your equipment, make sure to take the following precautions. Failure to follow warning notices and instruction may result in property damage, serious injury or death. Please keep the manual and read it carefully before using the product; If the manual is lost, please contact our after-sale service center.

I. SAFETY WARNING

II. MAIN COMPONENTS, PARAMETERS AND OVERALL DIMENSIONS

III. PACKING LIST

IV. INSTALLATION AND INSTRUCTION

V. MAINTENANCE

VI. GUIDANCE ON PROBLEMS

VII. WARRANTY AND AFTER SERVICE CONTACT INFORMATION

## SAFETY WARNING

1.This product is only for providing power for water leisure products and only limited to be used in water. It is forbidden to use it for other purposes.

2.When using the product, a proper emergency stop leash should be used

3.Children shall not play with the appliance. Cleaning and user maintenance shall not be made by children without supervision.

4.Do not modify the product or add other parts to it in any way. If any parts is damaged, Please contact after-sale service center.

5. Wash the power fin and its motor with fresh water; and do not put it in sea water or salt water to avoid damage to the motor.

6. This product is with li-ion batteries, always follow the batteries use principle and Matters needing attention.

7. The battery must be removed from the appliance before it is scrapped.

8. The appliance must be disconnected from the supply mains before removing the battery.

9. The battery must be disposed properly according to local regulations.

10. Never charge or use the product in thunderstorms and lightning conditions.

11. It is necessary to check whether each connection is firm before each use.

12. Check whether its electricity is enough before each use.

13. The power fin only be supplied at SELV(Safety Extra Low Voltage), can be applied only with specified batteries, specified chargers and remote control. If user needs to replace them, please contact the appointed after-sale service center.

14. The electric charging port of the battery case should be either connected with the power fin,or connected with charger, or cover its lid to avoid short circuit damage caused by other metals or moisture.

15. When the remote control and the charger are not used for a long time, it is necessary To disconnect power supply.

16. When it is not in use, it should be stored under the temperature of -15°~45° and avoid direct sunlight.

17. If the power fin is scrapped or need to be replaced with new one, it is necessary to follow the principle of recycling or return it to the dealer.

18. The appliance can be only used with specified chargers from the original manufacturer .

19. The components with electric box and motor is for the field installed equipment, its installation to ISUP shall be considered the safety requirements of moving part, water proof and other risks

## FCC ID: 2AVFRPF-240S

### FCC statement

This equipment has been tested and found to comply with the limits for a Class B digital device, pursuant to Part 15 of the FCC Rules. These limits are designed to provide reasonable protection against harmful interference in a residential installation. This equipment generates, uses and can radiate radio frequency energy and, if not installed and
used in accordance with the instructions, may cause harmful interference to radio communications.

However, there is no guarantee that interference will not occur in a particular installation.

- If this equipment does cause harmful interference to radio or television reception, which can be determined by turning the equipment off and on, the user is encouraged to try to correct the interference by one or more of the following measures:
  — Reorient or relocate the receiving antenna.
  — Increase the separation between the equipment and receiver.
  — Connect the equipment into an outlet on a circuit different from that to which the receiver is connected.
  — Consult the dealer or an experienced radio/TV technician for help.

This device complies with part 15 of the FCC Rules. Operation is subject to the following

Two conditions:

(1) This device may not cause harmful interference, and

(2) this device mustaccept any interference received, including interference that may cause undesired operation.

**CAUTION:** Any changes or modifications not expressly approved by the grantee of this device could void the user's authority to operate the equipment.

## RF EXPOSURE WARNING

The equipment complies with FCC RF exposure limits set forth for an uncontrolled environment.

The equipment must not be co-located or operating in conjunction with any other antenna or transmitter.

## POWER FIN PRODUCT DETAIL:

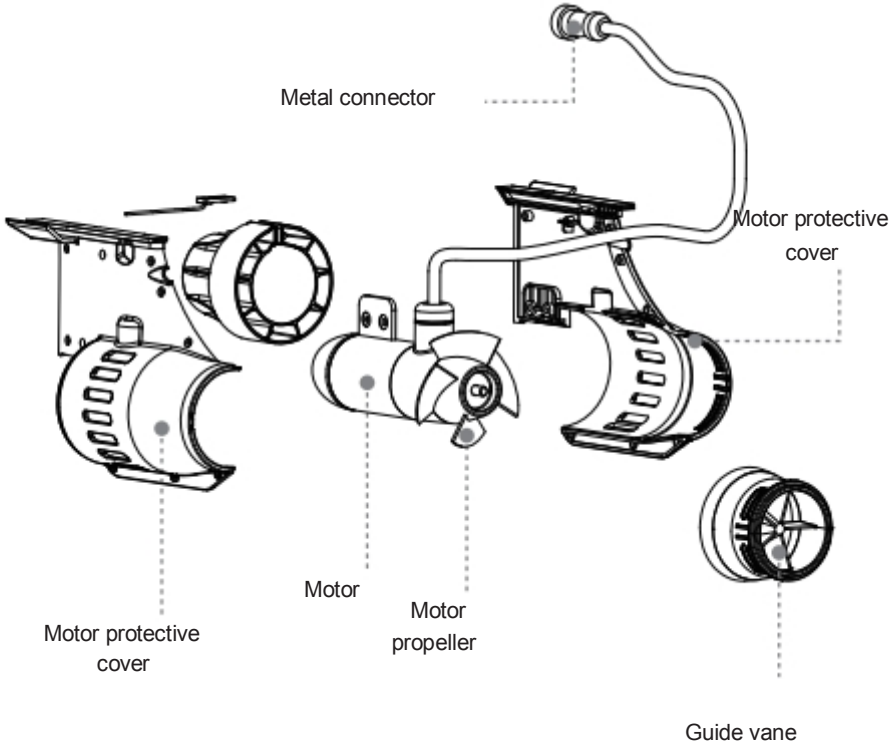

## PARAMETERS

| | |
|---|---|
| **Underwater Jet** | **Operating Speed:** 4-6km/h<br>• Low gear : Max. Speed 4km/h<br>• High gear : Max. Speed 6km/h<br>**Runtime:** 1h for low gear, 0.5h for high gear<br>**Protective Cover Material:** ABS<br>**Dimension:** 300 x 210 x 110mm (11.8” x 8.3” x 4.3”)<br>**Weight:** 2.5kg (5.5lbs) |
| **Battery Case** | **Rechargeable Battery Pack:** 11.1VDC, 8.8Ah/97.68Wh<br>Special lithium-ion battery for BlueDrive S Power Fin<br>**Material:** watertight, flame retardant ABS<br>**Battery Life:** ≥300 cycles<br>**Dimension:** 210 x 155 x 75mm (8.3” x 6.1” x 3”)<br>**Net Weight:** 1.25kg (2.8lbs)<br>With rechargeable battery, circuit board and 2-in-1 magnetic switch (working as both power switch and emergency stop switch) |
| **Charger** | **Input:** 100-240VAC,50/60Hz, 1.6A<br>**Output:** DC12.6V 5A<br>E480809<br>Full charging time for battery pack is 2~3 hours |
| **Interface:** | Metal interface of watertight marine waterproof for plug i |
| **Packing Dimension:** | 62 x 29.5 x 18.5cm (24.4" x 11.6" x 7.3") |
| **Packing weight /<br>Net weight:** | 5.9 kg (13 lbs) /<br>4.25 kg (9.4 lbs) |

## OVERALL DIMENSIONS:

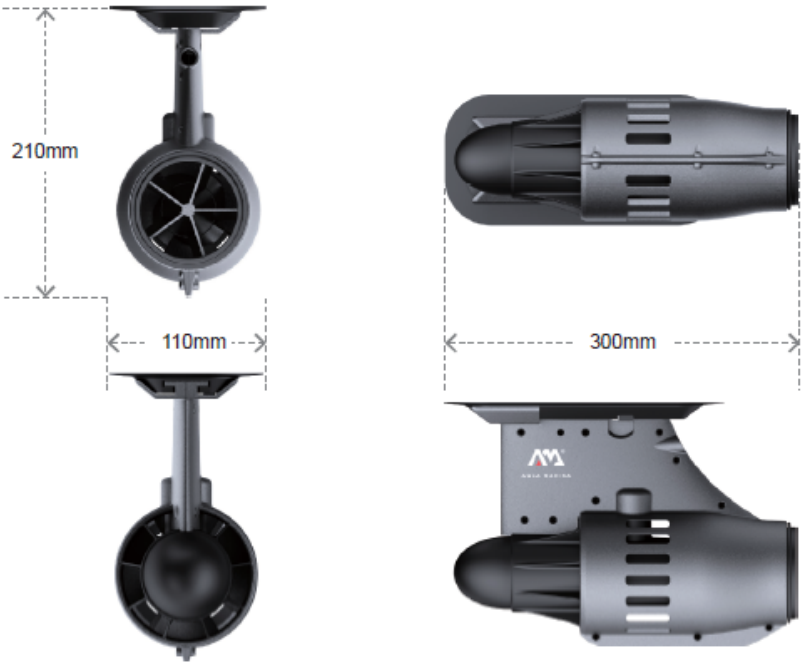


**Overall dimension chart of power fin, 300 x 210x 110mm (11.8" x 8.3" x 4.3")**

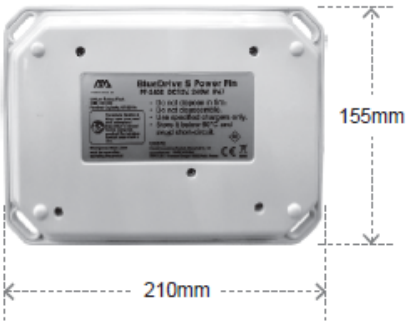

**Overall dimension chart of the battery case, 210 x 155 x 75mm (8.3" x 6.1" x 3")**

**Overall dimension chart of the handbag, 610 x 282 x 175mm (24" x 11.1" x 6.9")**

## PACKING LIST

| No. | Name of component part | Picture | Quantity /Unit | Remark |
|---|---|---|---|---|
| 1 | Underwate Jet | | 1 Set | With power cord,plug,fin base and push-in pin |
| 2 | Battery Case (Include Li-ion battery pack) | | 1 Set | With rechargeable battery,circuit board and 2-in-1 magnetic switch(working as both power switch and emergency stop switch) |
| 3 | Elastic rope buckle | | 1 Set | Black elastic rope of 88cm in length with carabiner |
| 4 | Remote Control | | 1 Set | With arm band, remote control and battery (CR 2025/CR 2032 3V) |
| 5 | Charger | | 1 Set | Picture shown |
| 6 | Manual | | 1 Copy | For American standard |

## INSTALLATION AND INSTRUCTION

1. **Open the packing box and check whether the components are complete**
2. **Install power fin into** Desired device **(As shown in the picture)**

   2.1 Insert the bottom of power fin into the fin base of Desired device;

   2.2 Insert the slide in push-in pin into the fin base;

2.1

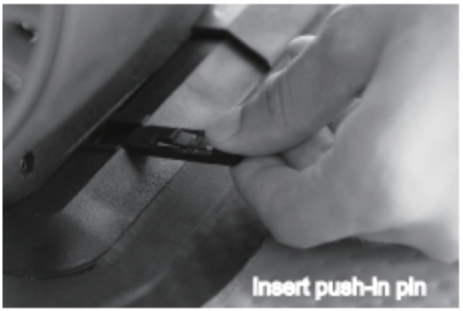


2.2

3. **Install the battery case**

   Firstly check whether the battery case is with electricity (please refer to the manual of Magnetic Switch for details). If it is or lack of electricity, please charge the battery case in following steps. (As shown in following pictures)

a

b

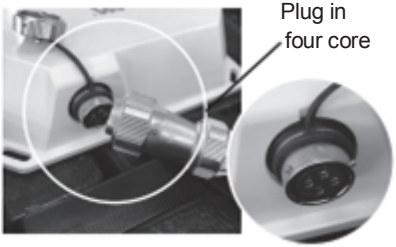


c

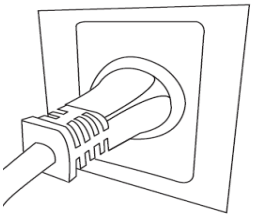

d

e

f

a. Insert the power cord of the charger into the corresponding hole position on the charger to charge the battery case.
b. Screw off the metal nut on the back of the battery case counterclockwise;
c. Connect the metal plug on the charger to the corresponding connector on the battery case (Please note the direction of convex and concave corresponding position) and tighten the nut;
d. Plug the power plug of the charger into the home power supply.
e. Snap the magnetic switch in the right position of the battery case. And the indicator light on the charger will turn red when it is charging successfully. Please note: the battery case can NOT be charged when it is not connected with the magnetic switch.
f. The indicator light on the charger will turn solid green when the battery case is fully charged. After charging, remove the power plug and charger and keep them properly for next charging.

3.1 Put the battery case on the Desired device with the direction of metal plug towards the stern of Desired device;

3.2 Fix the battery by fastening the elastic ropes across the bottom of board respectively and hook them on the 4 corners of battery box.

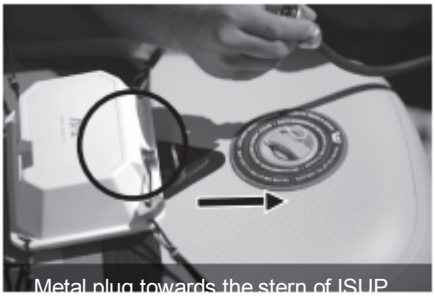
Metal plug towards the stern of ISUP

4. The connection between the power fin and the battery case: screw off the nut lid of the metal plug on the battery case, and insert the metal plug in the end of power line of the power fin into the corresponding metal socket hole of the battery case with correct direction and proper inserting; and tighten the metal nut;

**5. Remote control**

5.1 Please pull out the insulation layer (a transparent sheet) from the remote control before first use.

5.2 Loading the remote control into waterproof sleeve, and put it on the arm (as shown in the following picture)

5.3 Note: For the remote control, the effective distance is under 10 meters.

5.1

5.2

5.4 **Operations of Remote Control:**

a. : Start and operate at low gear

b. : Start and operate at high gear

c. : Stop (Note: This is NOT a “start” button.)

The user can do remote operation on Desired device

5.5 **Pairing Operation**

In most cases, pairing is not needed.

When there are over 2 devices, please follow pairing operations as below:

a. Snap the magnetic switch in the right position of the battery case;

b. Simultaneously press these 3 buttons on the remote control untill the indicator light is turned on to enter the pairing mode;

c. When paring is done, the indicator light will flash for 3 times, and the remote control could be used normally.

**6. Magnetic Switch Cord**

6.1 The magnetic switch cord is a 2-in-1 design, working as both power switch and emergency stop switch.

6.2 For standby mode, snap the magnetic switch in the right position of the battery case, and the indicator light will flash blue for 5 times and turn solid blue to display the remaining battery. The remaining battery is roughly indicated by the number of dots: 4-dot for nearly 100% battery, 3-dot for nearly 75% battery and so on.

6.3 To shut the battery off, pull out the magnetic switch directly.

6.4 Before each use, always connect the magnetic switch cord with the safety leash. If the red pull cord is removed from the battery case in emergency, the motor will immediately stop to avoid any danger.

6.2

6.4

**7. How to Remove Li-ion Battery**

7.1 The battery must be removed from the appliance before it is discarded.

7.2 To remove the Li-ion battery, firstly remove 5 screws from bottom base. Then remove 8 screws from the back cover, and the Li-ion battery pack could be easily separated from the battery case.

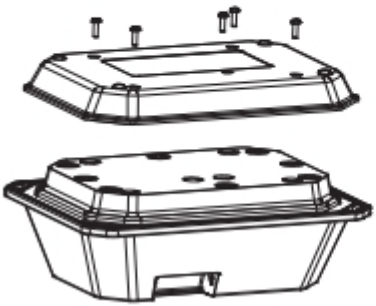

## MAINTENANCE

| Maintenance part | Time interval | Maintenance process |
|---|---|---|
| Remote control | Every month | If you don't use it for a long time, please remove the battery; |
| Underwater jet | After each use | Check the residues wrapped in propeller, if yes, pleas clean it |
| Battery Case | After each use | Wipe it with a rag and dry it |
| Battery Case | In any case | Do not open the battery case by in any cases. Please contact a local dealer or an after-service center for the battery maintenance. |
| The back side of propeller | After each use | Check the residues wrapped in propeller o spindle, if yes, please clean it |
| The connection section of appliances | Before and after each use | Check whether there is a scratch on the wire, please contact the after service center for replacement if needed; If there is water mark or other foreign body, please clean it up. |

## DISPOSAL AND ENVIRONMENTAL PROTECTION

This marking indicates this product should not be disposed with other household wastes. To prevent possible harm to the environment or human health from uncontrolled waste disposal, recycle it responsibly to promote the sustainable reuse of material resources. You can obtain information on disposal from your local authorities.

To return your used device, please use the return and collection systems or contact the retailer where the product was purchased. They can take

this product for environmental safe recycling.

| No. | Problem description | Solutions |
|---|---|---|
| 1 | The remote control does not work | 1. Check whether the battery is good and loaded properly<br>2. Check if the insulation layer is removed. |
| 2 | The charger does not work | Check whether the connection of the aviation plug is reliable. |
| 3 | The booster does not work | 1. Check whether the aviation plug between the motor and the battery case is reliable;<br>2. Check whether the magnetic switch is assembled. |
| 4 | The operation of propeller stagnate | 1.Check the residues wrapped in propeller, if yes, please clean it<br>2. Check whether there is electricity in the battery case;<br>3. Check the connection end of the battery case to make sure the connection is reliable and free of debris; |
| 5 | The booster is with big noise and serious shaking. | 1.Check the residues wrapped in propeller, if yes, please clean it<br>2. Check whether the propeller is destroyed, if yes, please contact after-sale service center;<br>3. Check whether the screw looses, if yes, please contact after-sale service center;<br>4. Disconnect the power supply and stir the propeller to check whether the propeller can turn freely and smoothly; Any obstacle or lock means there is foreign body in the motor. |

## GUIDANCE ON PROBLEMS

## WARRANTY AND AFTER SERVICE CONTACT INFORMATION

1. Product warranty is 1 year; and it is not within the scope of the warranty for any modification or use beyond the scope of product use, or any damage caused by wrong operation not in accordance with the manual;
2. After-sale service contact Information: ***www.aquamarina.com***