AQUA MARINA

EN

BLUEDRIVE X / X PRO POWER FIN

PF-240X
PF-240XP

USER MANUAL

RECOGNIZED MET E115029

CREATED FOR WATER LOVERS
WHO WANT IT ALL!
SUP Boarding
Kayaking
Snorkelling
Scuba-diving
AM Official Site
AM HOW-TO Guide
AM Service Center List

CONTENTS

I Introduction 06

II Product Details 06

III Parts and Technical Specifications 07

IV BLUEDRIVE X / X PRO in Use 09

4.1 Summary

4.2 Preparing the BLUEDRIVE X / X PRO

4.3 Charging the BLUEDRIVE X battery with the battery charger

4.4 Charging the remote control

4.5 Charging the nose illuminating system

4.6 Remote control pairing

V Using the BLUEDRIVE X / X PRO on SUP or Kayak 16

5.1 Contents of BLUEDRIVE X / X PRO used on SUP or kayak

5.2 Assembling the BLUEDRIVE X / X PRO to SUP or kayak

5.3 How to use the remote control when BLUEDRIVE X / X PRO is used on SUP or kayak

VI Using the BLUEDRIVE X / X PRO for Snorkeling, Diving or Swimming 20

6.1 Contents of BLUEDRIVE X / X PRO used for snorkeling, diving or swimming

6.2 Assembling the handheld terminal

6.3 How to manipulate the BLUEDRIVE X / X PRO while snorkeling, diving or swimming

6.4 How to use the nose illuminating system

VII Maintenance after Using BLUEDRIVE X / X PRO 25

7.1 Cleaning

7.2 Troubleshooting

7.3 Storage

VIII Packing and Transportation of BLUEDRIVE X / X PRO 27

8.1 How to pack BLUEDRIVE X / X PRO in the carry bag

8.2 Travelling with BLUEDRIVE X / X PRO by air

IX Battery Use & Care Information 28

X Important Safety Precautions and Warnings 30

XI Warranty Terms 33

SAFETY WARNINGS

Please read the instructions carefully before use and operate according to the instructions.

- This product provides power for aquatic leisure products. It can only be used in water, not for other purposes.
- This product can only be used in water. Do not allow the product to rotate in the air to avoid motor burnout due to excessive heating.
- Minors under 14 years old should not use this equipment.
- Children aged 14 and under, people with physical, sensory, or other disabilities, or people lacking experience and knowledge should not use this equipment without proper supervision or guidance on the safe use of this equipment and understand the hazards involved.
- Cleaning and maintenance should not be done by children without supervision.
- The equipment must be fully charged and installed before use in the water.
- It is prohibited to use the electric fins after consuming alcohol or drugs.
- Before using this equipment, please check the product thoroughly to ensure that the remote control, battery, propeller and other functions are normal.
- Please review the water conditions in the area you intent do use this equipment prior to entry. Ensure that water conditions are appropriate for use and that the authorities of the area allow the use of such equipment.
- Pay attention to the surrounding environment and avoid collision with ships or other swimmers.
- To ensure safety, a safety undershirt or life-saving equipment should be worn on site.
- Please take out the battery and store it properly according to the relevant regulations during transportation or when carrying this equipment on aircraft.
- Do not put your fingers into the fins, and keep your clothes or other objects away from the propeller.
- Avoid wearing loose clothes or equipment during use to prevent being caught in the propeller.
- For those with long hair, it is suggested to wear a swim cap to avoid getting caught in the propeller.
- Check the battery power from time to time and return to shore before the power is exhausted.
- When using this product, please hold the handle tightly, and do not point the front and back of the product at your own face or others.
- People who are not able to swim, snorkel, dive or perform other sports should not use this product.
- When using this equipment in open water area, do not allow foreign objects such as clothing, weeds, wire, fishing nets, shells, mud and sand to be sucked into the propeller to avoid danger. The ambient temperature for using this product is 0°C (32°F) ~ 40°C (104°F), and the storage ambient temperature is below 45°C (113°F).
- Do not use this equipment on the beach to prevent sand, shells or other foreign matters from entering the propeller.
- Keep the equipment away from gasoline, rubber solution or other volatile or acidic substances.
- Keep the equipment away from sharp objects.
- Do not place heavy objects on the equipment.
- When using this equipment in dark waters or at night, sufficient lighting is required.
- This equipment is water resistant to a depth of 10m/3h.
- It is prohibited to use this product to dive deeper than 10m.
- Do not use this equipment in sandy water or waters with similar physical properties.
- Do not use this equipment in case of any damage or malfunction.
- The product buoyancy is affected by the geographical location, temperature, depth, and water flow, and may sink when the product is released.
- Remove the equipment out of the water when not in use.
- Before charging, take the rechargeable battery out of the equipment.
- If the equipment is to be stored for a long time, the battery should be taken out and the power terminals should not be short-circuited.
- The remote control and headlamp lighting system include a non-replaceable polymer lithium battery.
- When charging the battery, the ambient temperature range should be 10°C (50°F) ~ 45°C (113°F). The

storage ambient temperature should be below 45°C (113°F).

- Connect the positive and negative poles of the battery correctly, reverse charging is strictly prohibited. If the positive and negative poles of the battery are connected inversely, the battery will not be charged. In addition, reverse charging will reduce the charging and discharging performance and safety of the battery, and will lead to heating and leakage.
- The charging current should not exceed the maximum charging current specified in this manual. If the charging current is greater than the recommended value, the charging and usage performance, mechanical performance and safety performance of the battery may have problems, which may lead to heating or leakage. The charging voltage shall not exceed the rated voltage of DC 25.2V specified in this manual, and DC 25.5V is the maximum charging voltage. When the cell voltage is higher than the rated voltage, it may cause problems in the charging and usage performance, mechanical performance and safety performance of the battery, and may cause heating or leakage.
- The battery storage voltage is 22.2V~23.1V. Storage while fully charged is not suggested.
- Do not directly connect terminals with metal objects. This will short-circuit the battery, causing heating and discharging.
- Only the charger designed for lithium polymer/lithium-ion battery can be used. Do not use NIMH/ NICD/ LIFEPO4/ lead-acid charger. If the charger can support different battery types, be sure to select the lithium polymer (Lipo) mode on the charger. Otherwise, it may cause fire, resulting in personal injury and property loss.
- Always charge the battery in an open area away from flammable materials, liquids and surfaces.
- Do not charge the battery if it is very hot (above 37.8°C / 100°F). Do not charge the battery until it has cooled down.
- Do not replace the battery under water. When replacing the battery, make sure to do it in a dry environment and keep the equipment and hands dry.
- The battery cannot be disassembled, modified, or subjected to strong vibration or impact. Please handle the battery carefully after installation.
- The battery should not be allowed to get damp and the battery metal socket should not come in contact with liquids. When you assemble, disassemble and store the battery, please keep the product and your hands completely dry, and operate in a dry environment.
- If the battery produces abnormal smell, heat, discoloration, deformation or other abnormalities during use or charging, please stop using or charging immediately. If the above abnormal conditions occur during the storage of the battery, please inspect the storage environment.
- Do not throw the battery into fire.
- Do not put the battery into a microwave oven, high-pressure vessel, or electromagnetic oven.
- Do not store the battery in an outdoor vehicle or at high temperatures for long periods of time.
- This product should be stored away from direct sunlight. High temperatures will damage the battery, causing explosion or leakage. Do not repair this equipment without authorization to avoid leakage, damage, fire, or electric shock.
- This device complies with part 15 of the FCC Rules. Operation is subject to the following two conditions: (1) This device may not cause harmful interference, and (2) this device must accept any interference received, including interference that may cause undesired operation.
- Please note that changes or modifications not expressly approved by the party responsible for compliance could void the user's authority to operate the equipment.
- This equipment complies with radio frequency exposure limits set forth by the FCC for an uncontrolled environment.
- This equipment should be installed and operated with a minimum distance of 70 mm between the device and the user or bystanders.
- This device must not be co-located or operating in conjunction with any other antenna or transmitter.
- Note: This equipment has been tested and found to comply with the limits for a Class B digital device, pursuant to part 15 of the FCC Rules. These limits are designed to provide reasonable protection against harmful interference in a residential installation. This equipment generates, uses and can radiate radio frequency energy and, if not installed and used in accordance with the instructions, may cause harmful interference to radio communications. However, there is no guarantee that interference will not occur in a particular installation. If this equipment does cause harmful interference to radio or television reception, which can be determined by turning the equipment off and on, the user is encouraged to try to correct the interference by one or more of the following measures:
  – Reorient or relocate the receiving antenna.
  – Increase the separation between the equipment and receiver.
  – Connect the equipment into an outlet on a circuit different from that to which the receiver is connected.
  – Consult the dealer or an experienced radio/TV technician for help.

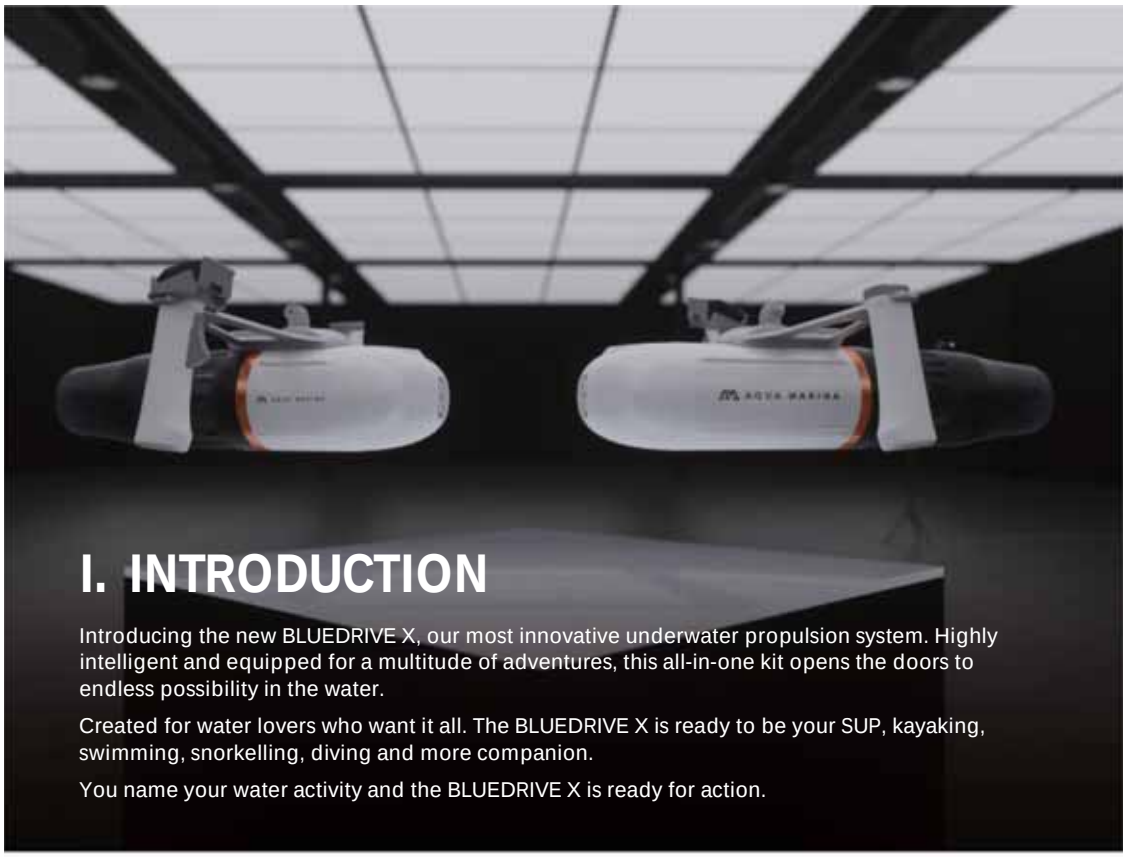

I. INTRODUCTION

Introducing the new BLUEDRIVE X, our most innovative underwater propulsion system. Highly intelligent and equipped for a multitude of adventures, this all-in-one kit opens the doors to endless possibility in the water.

Created for water lovers who want it all. The BLUEDRIVE X is ready to be your SUP, kayaking, swimming, snorkelling, diving and more companion.

You name your water activity and the BLUEDRIVE X is ready for action.

II. PRODUCT DETAILS

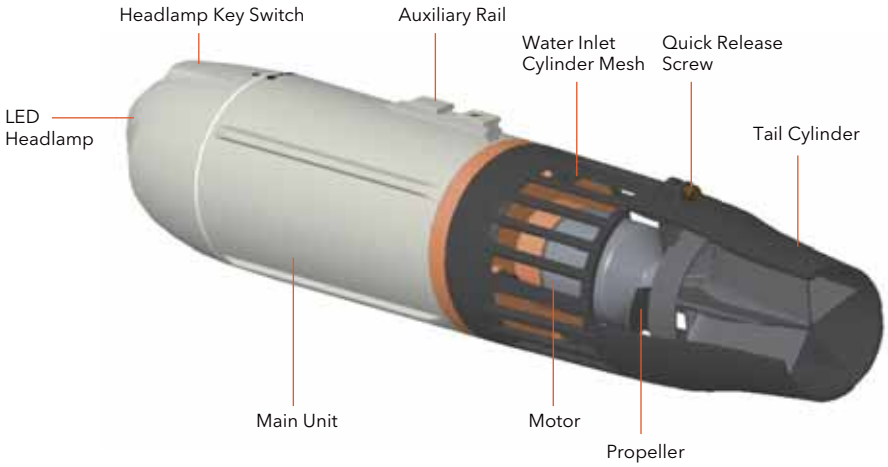

III. PARTS AND TECHNICAL SPECIFICATIONS

3.1 PART LIST

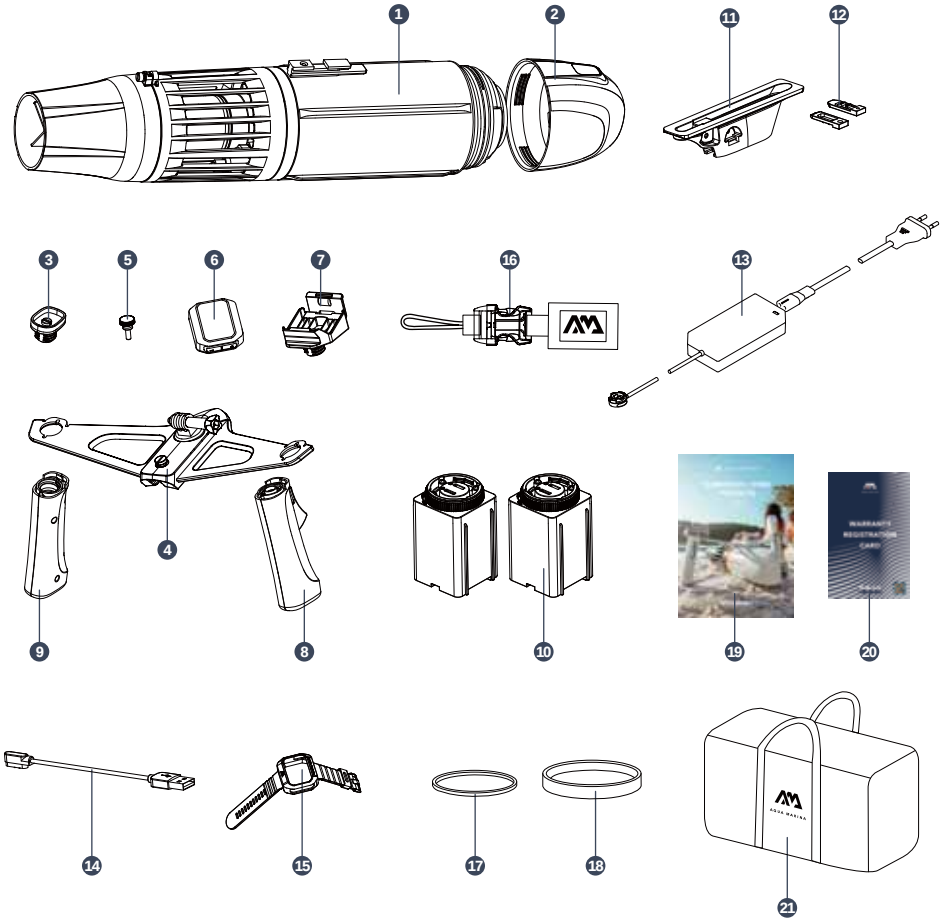

1	Main unit x 1	12	Locating pin x 2
2	Headlamp x 1	13	Charger x 1
3	Left handle top cover x 1	14	USB data cable x 2
4	Handle bracket x 1	15	Watch strap x 1
5	Quick-release spare screw x 2	16	Safety rope x 1
6	Remote control x 1	17	Battery compartment waterproof backup ring x 1
7	Remote control base x 1	18	Top cover waterproof backup ring x 1
8	Right handle x 1	19	Manual x 1
9	Left handle x 1	20	Warranty card x 1
10	Battery (PF-240X x 1，PF-240XP x 2)	21	Portable bag x 1
11	SUP connector x 1		

3.2 TECHNICAL SPECIFICATIONS

Main Unit	Product Model		PF-240X			PF-240XP		
	Weight		3.5 kg / 7.7 lbs			4.3 kg / 9.5 lbs		
	Dimension		432 x 367 x 170 mm			515.5 x 367 x 170 mm		
	Waterproof Rating		Watertight			Watertight		
	Adjustable Gear		Speed (km/h)	Duration (min)	Power (W) / Current (A)	Speed (km/h)	Duration (min)	Power (W) / Current (A)
			3	50	150 / 6	3	100	150 / 6
			5	35	290 / 11.5	5	70	290 / 11.5
			7	20	504 / 20	7	40	504 / 20
	Capacity							
	Thrust		Max. 7 kgf			Max. 7 kgf		
	External Devices Supported		Support attaching sports cameras					
Battery	Model		LB-24V6					
	Charging Voltage		25.2 V					
	Charging Current		2.8 A (Max 4.4 A)					
	Rated Capacity		4400 mAh					
	Rated Energy		97.68 Wh (PF-240X*1，PF-240XP*2)					
	Charger		Model: GJS150-25020280					
	Charging Duration		About 2.5 h					
	Weight		630 g / 22.2 oz					
Charger	Input Voltage		AC 100 ~ 240 V					
	Output Voltage		DC 25.2 V					
	Output Current		2.8 A (Max 4.4 A)					
Headlamp	Rated Voltage		DC 3.7 V					
	Rated Capacity		1000 mAh					
	Charging Voltage		DC 5V 1A					
	Charging Duration		About 4.5 h					
	Energy Consumption		High-intensity Lighting			About 2 h		
			Energy-saving Mode			About 8 h		
			High-brightness Flickering			About 4 h		
			SOS Mode			About 5 h		
	Lighting Distance		3m					
Remote Control	Model		RC-23BX					
	Rated Voltage		DC 3.7 V					
	Rated Capacity		450 mAh					
	Charging Voltage		DC 5V 1A					
	Charging Duration		About 1 h					
	Energy Consumption		About 5 h					
	Charging Cable		USB magnetic data cable, 2-pin spacing: 4mm					

Note:

1. With the consumption of battery power, the power will gradually weaken, and the equipment will automatically slow down and jump to a lower gear, or the high and middle gear will not be available. This is within the normal application.
2. This data is for reference only. The specific use duration will vary with different gears, user weights, use environments, and use frequencies.
3. The camera base of this product only supports some models of action cameras, which are not included with this product.
4. The SUP connector of this product only supports some types of SUP boards, which are not included with this pruduct. If necessary, please purchase an adaptive SUP fin box adaptor.

IV. BLUEDRIVE X / X PRO IN USE

4.1 SUMMARY

This section applies to the proper use of BLUEDRIVE X/ X PRO. Please follow each of the steps carefully in order to start your BLUEDRIVE X/ X PRO.

Once the device is set up, go to the relevant section with your activity as follows:
For the use on a SUP or kayak, go to section V.
For the use while snorkeling, diving or swimming, go to section VI.

4.2 PREPARING THE BLUEDRIVE X / X PRO

Step 1:

Open the battery compartment cover, remove the battery plug cover.

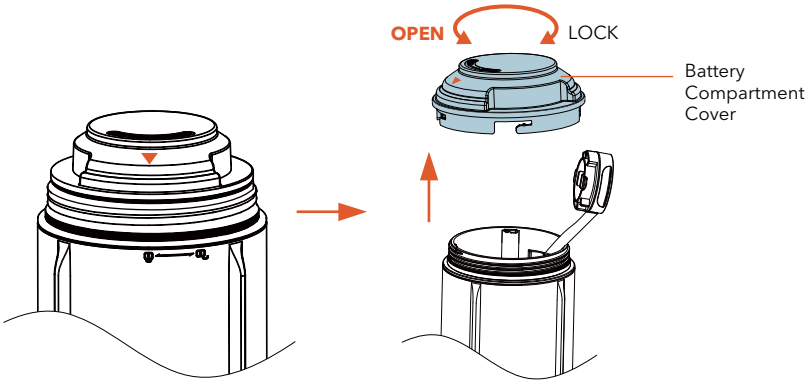

Step 2:

Install the battery into the battery compartment.

Install the lower battery upside down by pulling up the handle at the bottom of the battery, direct the battery socket towards the bottom of the battery compartment, and then return the handle to a flattened state. Install the upper battery upright, with the battery socket towards the top of the battery compartment.

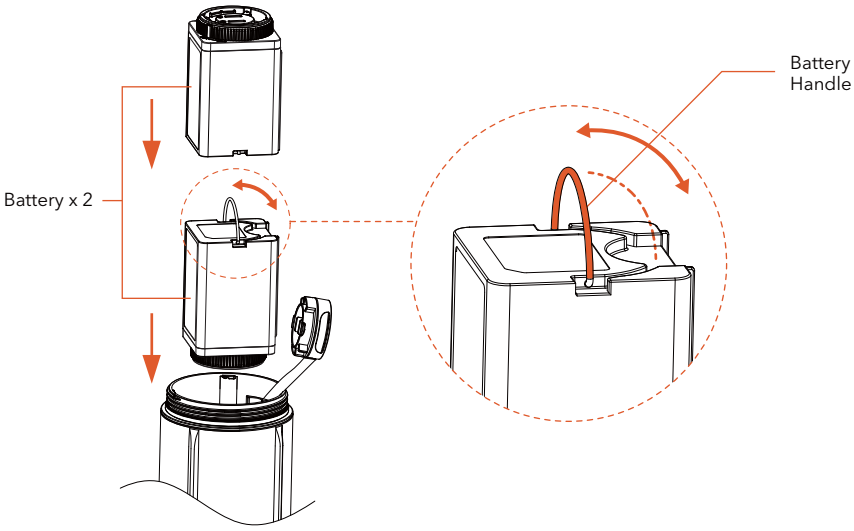

Step 3:

First, turn the "▲" on the battery lock cover to "**OPEN**", which makes a "click" sound.
Then, align the latch on the battery plug cover with the slot on the battery.
Finally, turn the "▲" on the battery lock cover clockwise to "**LOCK**", which makes a "click" sound.
(When turning anticlockwise to "**OPEN**", the lock cover will be unlocked.)

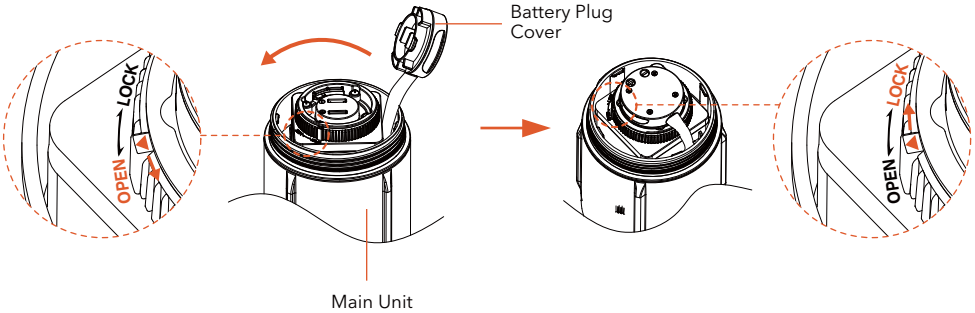

Step 4:
First, inspect whether the waterproof ring 1 on the battery compartment cover is installed properly. Align the four concave clips of the battery compartment cover with the convex clips of the main unit, and then rotate clockwise to lock. When the "▲" of the battery compartment cover aligns with the " 🔒 " of the main unit and makes a "click" sound, it means that the battery compartment cover is locked. (Rotate the battery compartment cover anticlockwise, when the battery compartment cover "▲" is aligned with the main unit " 🔓 ", it means that it is unlocked.)

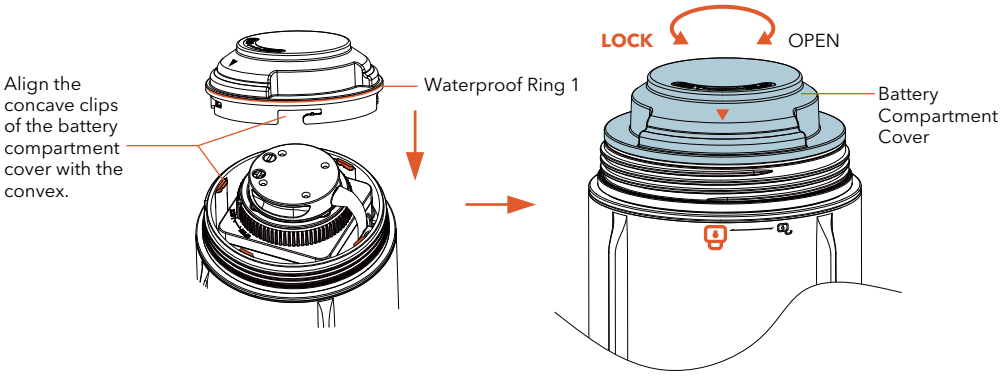

Step 5:
First, inspect whether the waterproof ring 2 on the main unit is installed properly.
Then, rotate the headlamp clockwise and tighten it in place. When the "▲" of the headlamp housing is aligned with the " 🔒 " of the main unit, it is locked. (Rotate the headlamp anticlockwise, and " 🔓 " represents the unlocking direction.)

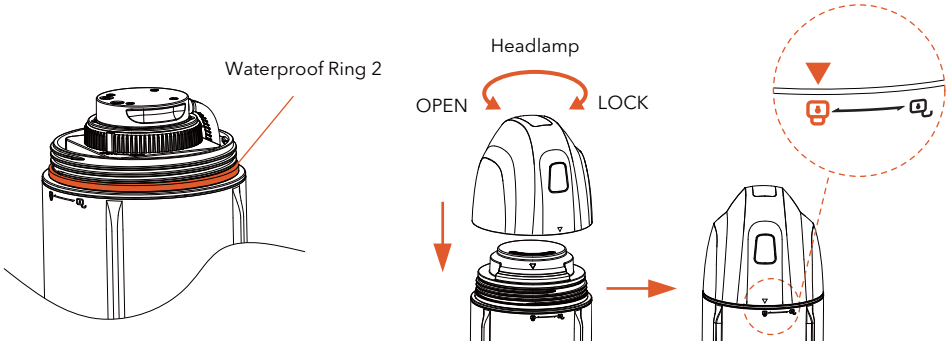

4.3 Charging the BLUEDRIVE X battery with the battery charger

Warning:
1. Be sure to fully charge the battery before the first use.
2. Before removing the battery from the main unit, please turn off the machine with the remote control first to ensure the product is stopped.

Step 1: First, turn the "▲" on the battery lock cover to "**OPEN**", which makes a "click" sound. Then, align the pin at one end of the battery charger with the battery slot and insert it downward. Finally, turn the "▲" on the battery lock cover clockwise to "**LOCK**", which makes a "click" sound.

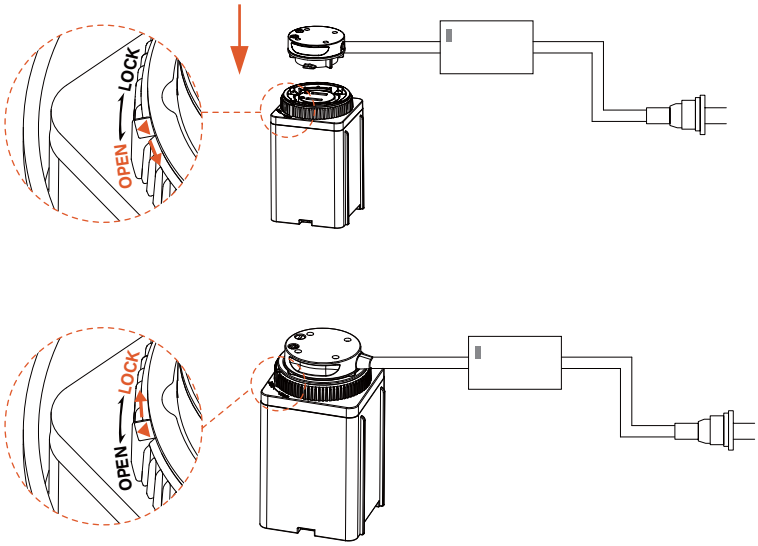

Step 2: Connect the plug (a) of the battery charger to the AC power supply (AC100V-240V, 50/60Hz; if necessary, use the power adapter).

Step 3: The red indicator of the charger indicates that the battery is being charged, and the green indicator indicates that the battery is fully charged. It takes about 2.5h to fully charge the battery.

Note: Please unplug the battery charger when not charging.

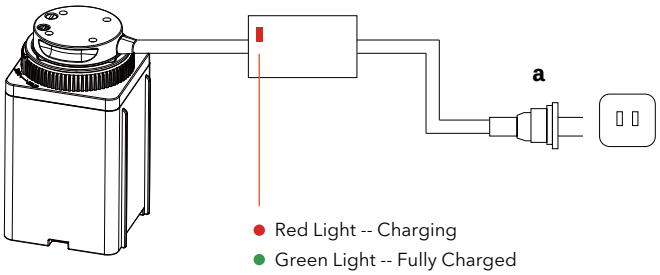

4.4 Charging the remote control

Warning:
1. Before charging, please confirm that the remote control is off.
2. Do not operate the remote control while charging.

Step 1: Remove the silicone cover of the charging interface at the bottom of the remote control in the direction of the arrow.

Step 2: Please use DC 5V 1A power adapter (not provided) or standard USB charger for charging. Connect the magnetic connector (a) of the USB data cable to the remote control, and the other end (b) to the USB charging port.

Step 3: If the red indicator of the remote control is on, it means that the battery is charging. If the green indicator is on, the battery is fully charged and the connection should be disconnected.

Step 4: After charging, please cover the silicone cover of the charging interface at the bottom of the remote control.

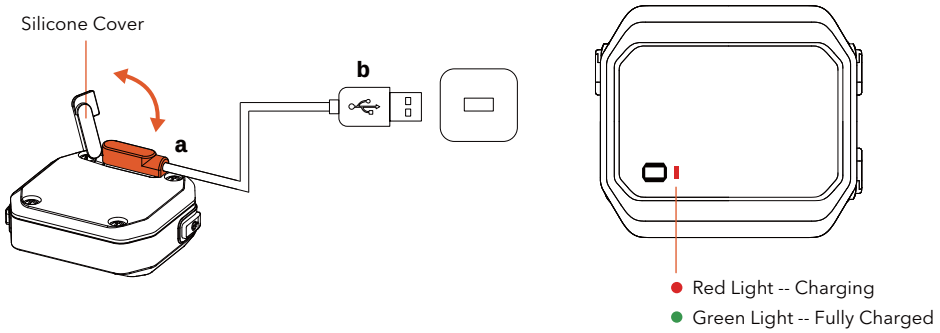

Note:

Do not scratch the charging terminal with sharp objects, this will affect the service life of the product.

Keep the surface of the charging terminal dry.

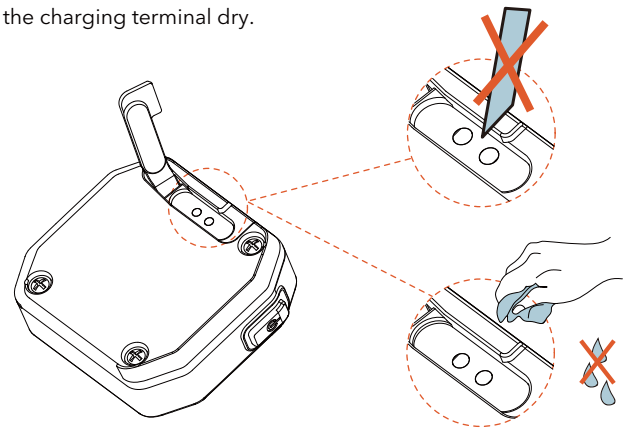

4.5 Charging the nose illuminating system

Warning:
1. Before charging, make sure that the headlamp is off.
2. Do not operate the headlamp while charging.

Step 1: Rotate the headlamp anticlockwise and remove it from the main unit.

Step 2: Please use DC 5V 1A power adapter (not provided) or standard USB charger for charging. Connect the magnetic connector of the USB data cable to the headlamp, and insert the other end into the USB charging port.

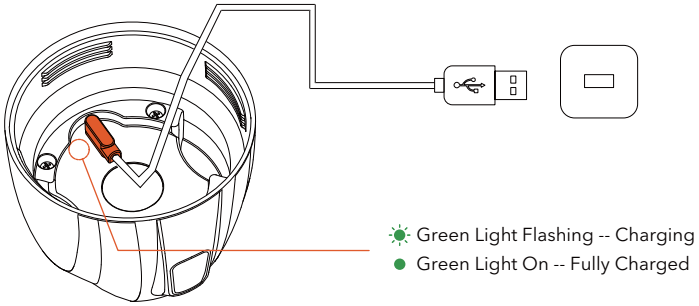

Step 3: If the charging indicator is green and flashing, it means that the battery is charging; if the indicator stays solid green, it means that the battery is fully charged and should be disconnected.

Note:

Do not scratch the charging terminal with sharp objects, this will affect the service life of the product.

Keep the surface of the charging terminal dry.

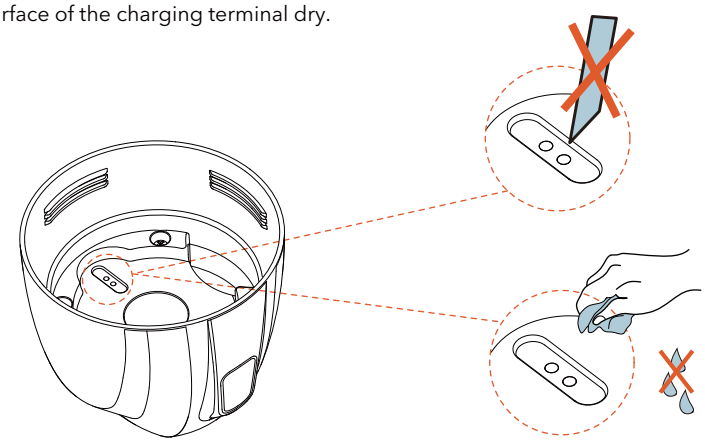

4.6 Remote control pairing

When there are multiple PF-240X (P) units nearby, to avoid mutual interference, one-to-one control can be realized through pairing operation.

Step 1: Remove the battery of the main unit.

Step 2: Press the **ON/OFF** " ⏻ " button on the remote control to start, press the **ON/OFF** " ⏻ " button and the "**+**" gear-up button simultaneously (about 3s) until the green indicator light on the remote control and the main unit power indicator light flash, and then release the buttons. The remote control will enter pairing mode.

Step 3: Install the battery of the main unit, and the system will pair automatically.

Step 4: After the screen of the remote control flashes quickly (5 times), the pairing is successful, and the remote control resumes displaying the power and enters normal mode. If the full screen still does not flash after 3 min, the pairing failed. Please restart pairing from Step 1.

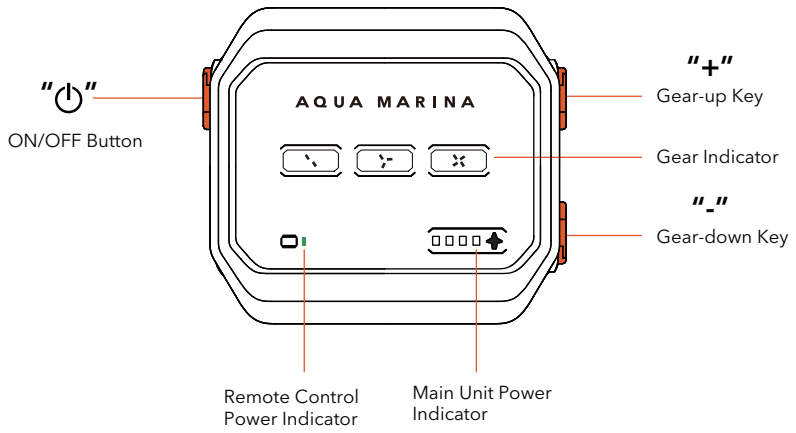

Remote Control Interface Description

After pairing, please note that:

If you still need one-to-one control after replacing the battery, please pair again. If it is not necessary, please restore the remote control to the default pairing (only required for the first time) by following the instructions below.

Restore default pairing:

If you want to control multiple units with one remote control, you can restore the default pairing state to realize such operation.

1) Remote control: After startup, simultaneously press the **ON/OFF** " ⏻ " button and the gear-down "**–**" button until the red indicator light of the remote control power flashes, the remote control will restore its default pairing state.
2) Main unit: Take out the battery of main unit, wait for 5s, and then reinstall it. The main unit will restore its default pairing state.

The remote control in the default state can control one or more main units in default state nearby.

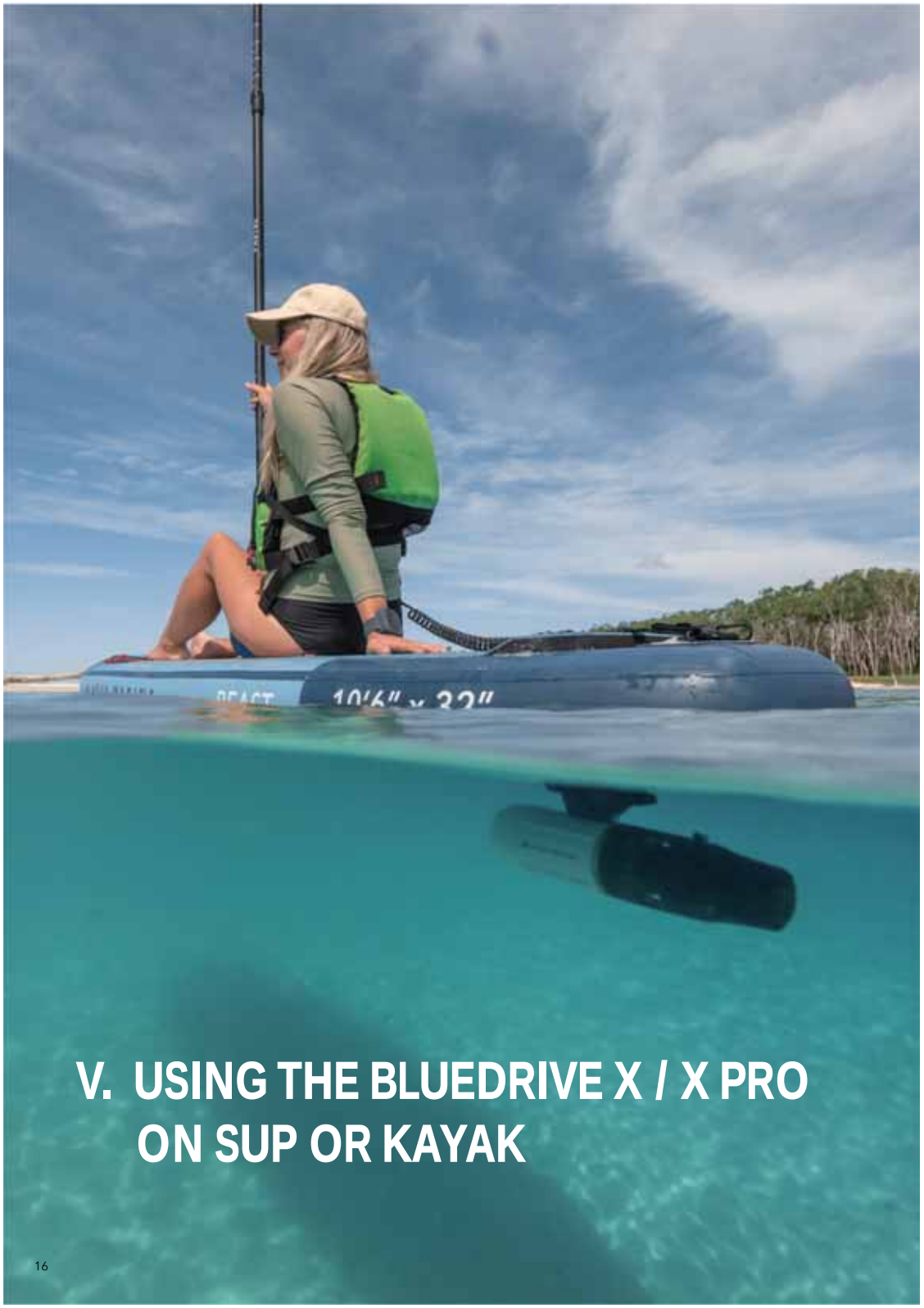

V. USING THE BLUEDRIVE X / X PRO ON SUP OR KAYAK

5.1 Contents of BLUEDRIVE X / X PRO used on SUP or Kayak

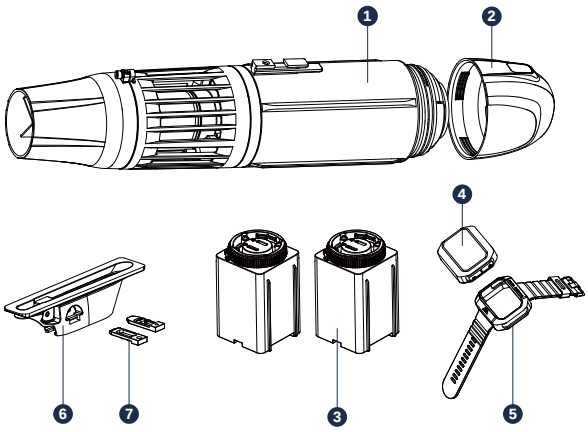

1	Main unit x 1
2	Headlamp x 1
3	Battery (PF-240X x 1， PF-240XP x 2)
4	Remote control x 1
5	Watch strap x 1
6	Fin box connector x 1
7	Locating pins x 2

5.2 Assembling the BLUEDRIVE X / X PRO to SUP or kayak

Step 1: Align the rail A of the fin box connector with the auxiliary rail of the main unit, and slide the connector onto the main unit along the rail.

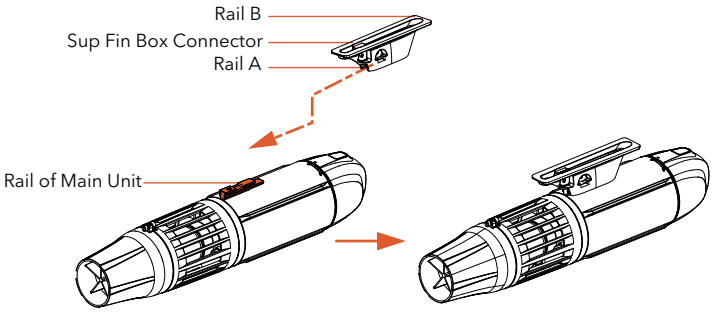

Step 2: Take one locating pin, align with hole A, and insert for locking.

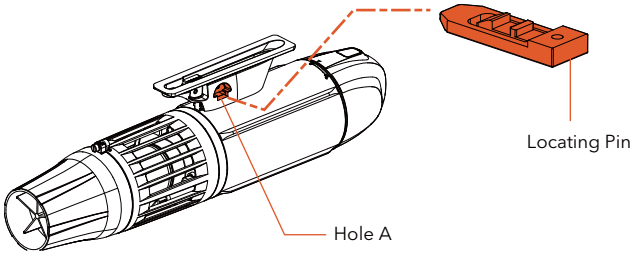

Step 3: Align the fin box connector rail B with the fin box on SUP/KAYAK (not provided), slide the connector onto the fin box along the rail, and then insert the locating pin to hole B for locking.

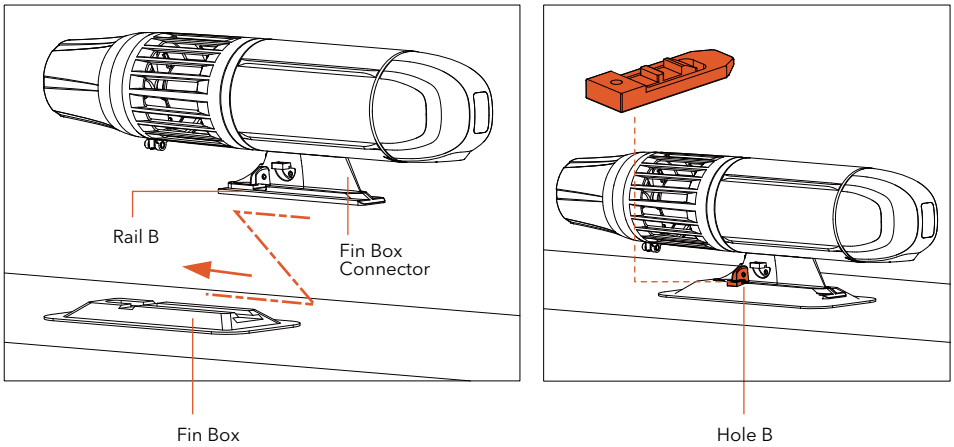

Note:

If your SUP fin box has a "Swift Attach Fin System (SAFS)", install the fin box adaptor (*sold separately) as follows: Install the SUP fin box connector onto the adaptor by sliding it into adaptor rail C, and then insert the locating pin to hole B for locking.

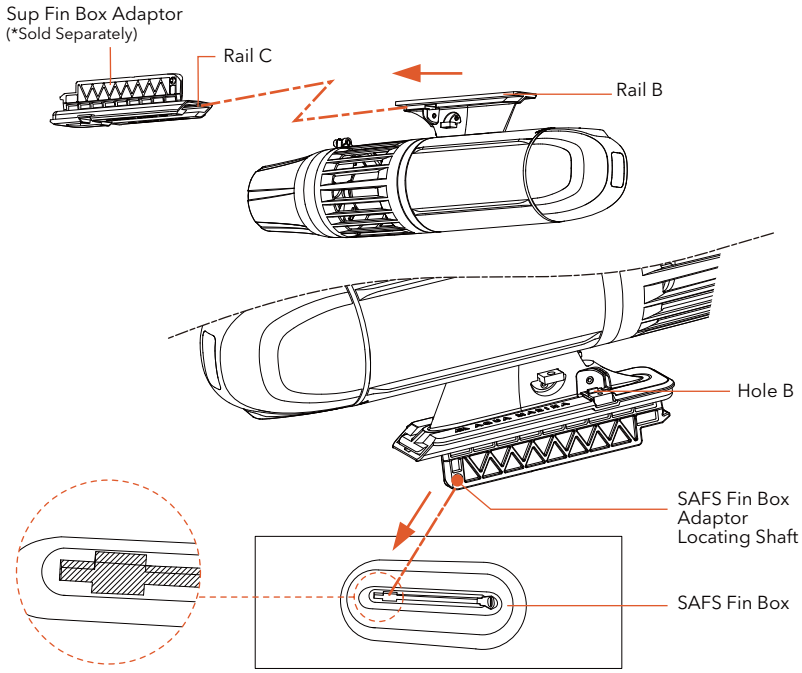

5.3 How to use the remote control when BLUEDRIVE X / X PRO is used on SUP or kayak

Step 1: Attach the remote control to the silicone watch strap.

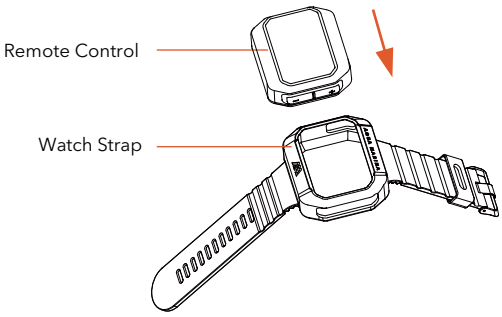

Step 2: Press the **ON/OFF** button "⏻", and the remote control display will display the remote control power and the main unit power, indicating that the unit has started successfully.

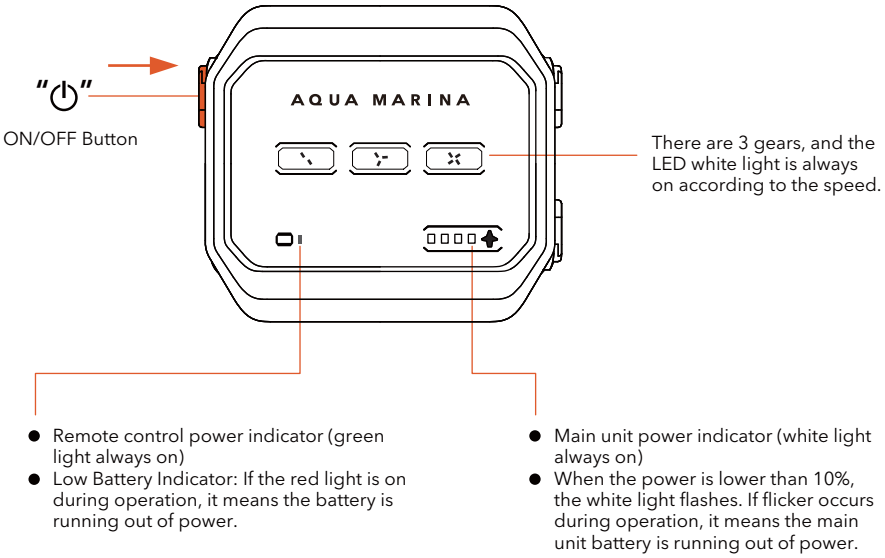

Step 3: Press the acceleration key "**+**" on the side of the remote control, and the display will show "", and the unit will run at the default low speed. Press "**+**" to accelerate gear, and press "**–**" to decelerate gear.
Step 4: To turn off the power, press the **ON/OFF** button "⏻" on the remote control.
Note:
With the consumption of battery power, the power will gradually weaken, and the equipment will automatically slow down and jump to a lower gear, or the high and middle gears will not be available. This is within the normal operation.
The maximum control distance of the remote control is 3m under the SUP or kayak mode. The main unit and remote control will automatically power off if there is no operation for 15 minutes.

VI. USING THE BLUEDRIVE X / X PRO FOR SNORKELING, DIVING OR SWIMMING

6.1 Contents of BLUEDRIVE X / X PRO used for snorkeling, diving or swimming

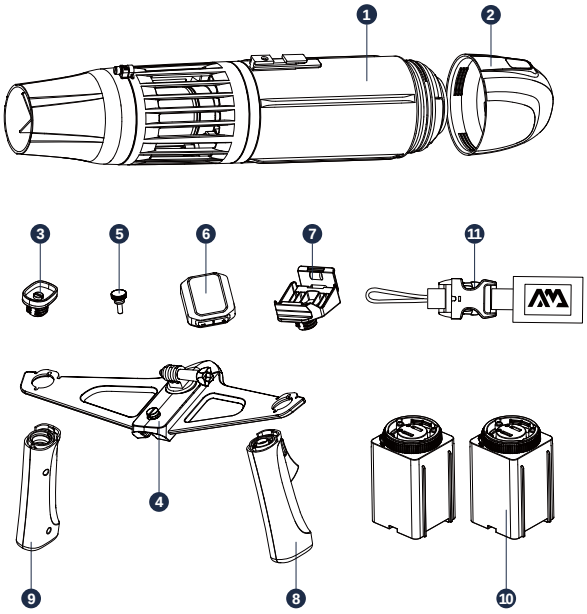

1	Main unit x 1
2	Headlamp x 1
3	Left handle top cover x 1
4	Handle bracket x1
5	Quick-release spare screws x 2
6	Remote control x 1
7	Remote control base x 1
8	Right handle x 1
9	Left handle x 1
10	Battery (PF-240X x 1, PF-240XP x 2)
11	Safety rope x1

6.2 Assembling the handheld terminal

6.2.1 Handle assembly

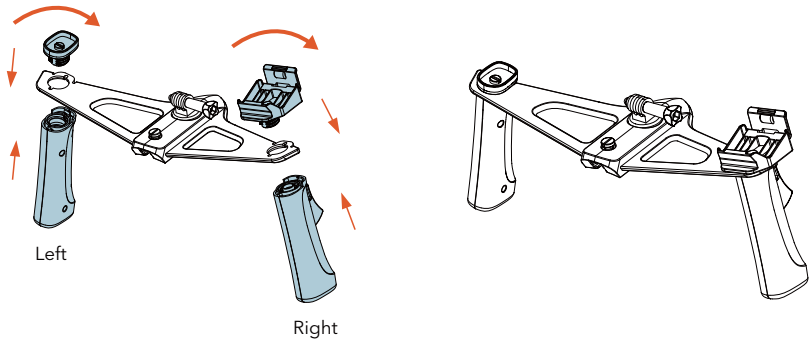

Step 1: Align the left handle with the left slot of the handle bracket, and then insert the top cover of the left handle into the left handle and screw clockwise.

Step 2: Align the right handle with the right slot of the handle bracket, and then insert the remote control base into the right handle and screw clockwise.

6.2.2 Assembly of handle bracket and main unit

Step 1: Align the handle bracket rail with the auxiliary rail of the main unit, and slide it onto the main unit rail until their screw holes are aligned.

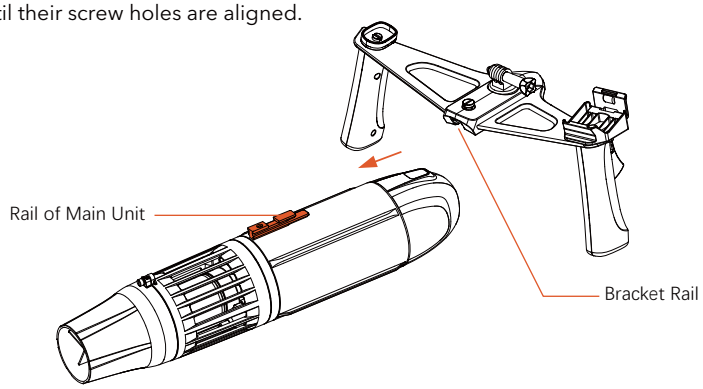

Step 2: Take one quick-release screw and screw clockwise (unscrew anticlockwise) to tighten it on the main unit.

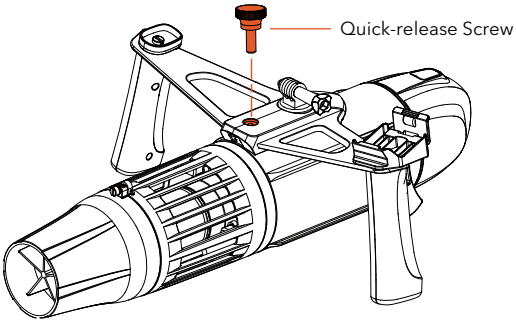

6.2.3 Remote control assembly

Step 1: Install the remote control vertically. When the remote control latch makes a “click” sound, it is locked in place.
Step 2: To remove, press the remote control latch outward, and then take out the remote control.

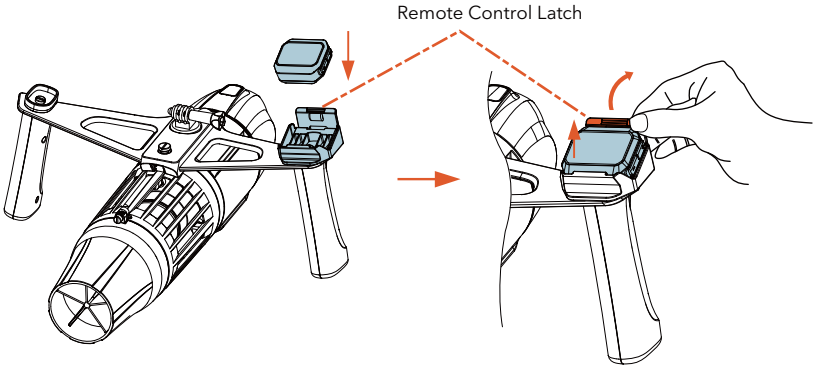

6.2.4 How to attach an action camera

Please make sure your action camera (*not included) is waterproof to avoid damage caused by water intrusion.

Step 1: Align the action camera with the mounting slot on your camera base and insert into the base.
Step 2: Align the camera's fixing screw with the mounting hole of the fixed base and tighten it clockwise to fix the action camera.

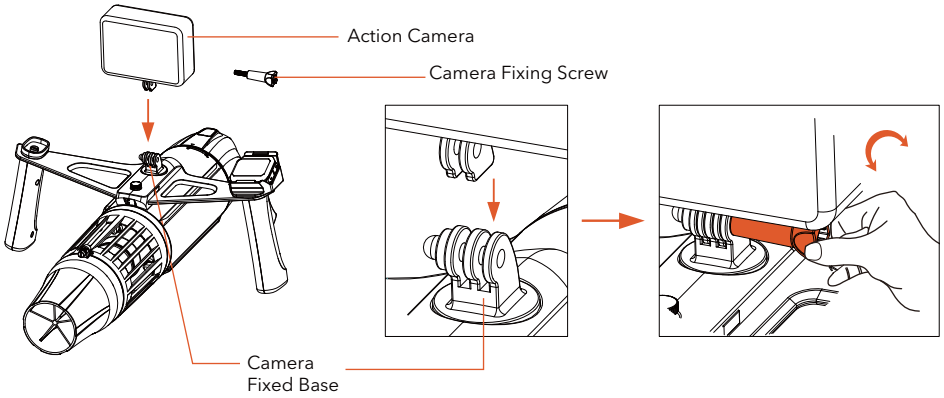

6.2.5 How to wear the wrist safety rope

The safety rope is only applicable to prevent the product from slipping out of your hands under water, and is not applicable to carrying the product on shore.

Step 1: Insert part (b) into the hole of the handle bracket and fasten it.
Step 2: Unfasten the Velcro of part (a), and tie the wrist strap to your wrist.
Step 3: Fasten the clips of parts (a) and (b).
Step 4: In case of emergency, press and hold the clips on both sides of part (b) and pull them out in opposite directions to use the quick release function.

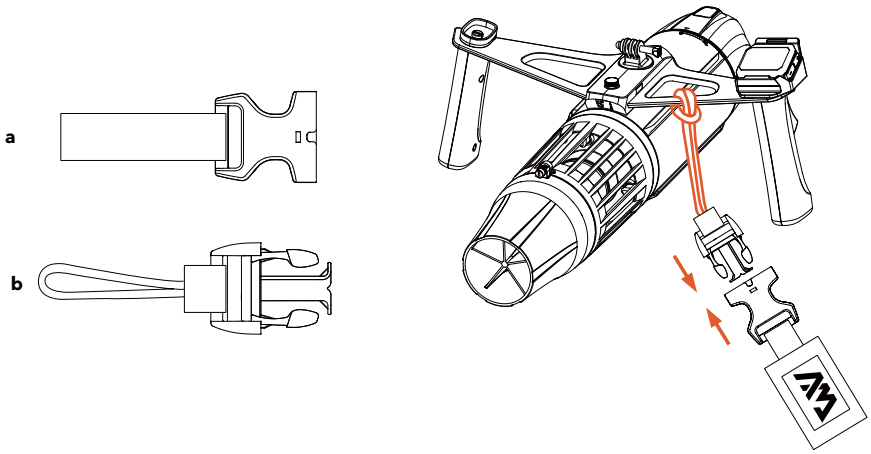

6.3 How to manipulate the BLUEDRIVE X / X PRO while snorkeling, diving or swimming

Step 1: Long press the **ON/OFF** "⏻" button of the remote control for 3 seconds, and the screen of remote control will flash 5 times, then the screen will display the remote control power and main unit power, indicating that the unit started successfully.

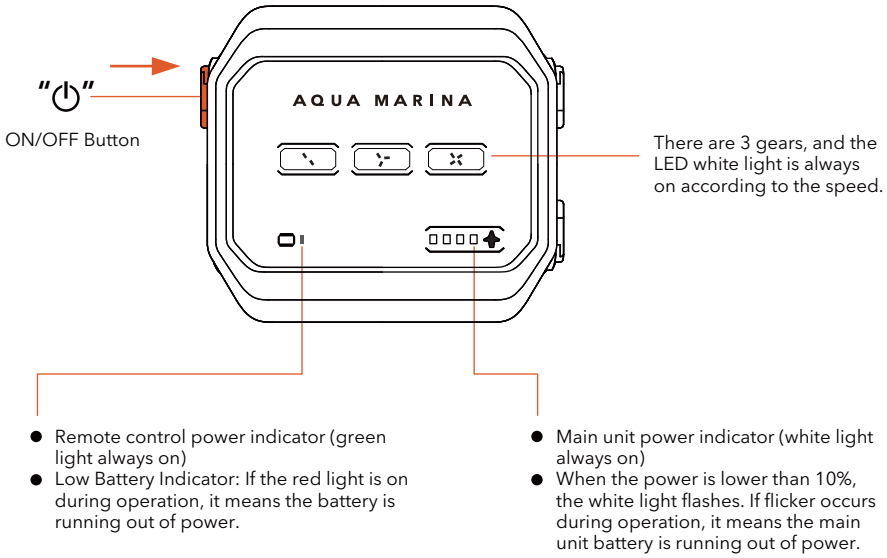

Remote Control Interface Description

Step 2: Press the trigger (**ON⇌OFF** switch) on the right handle, and the display screen will show " "and the unit will run at default low speed. Double click to shift the gear.

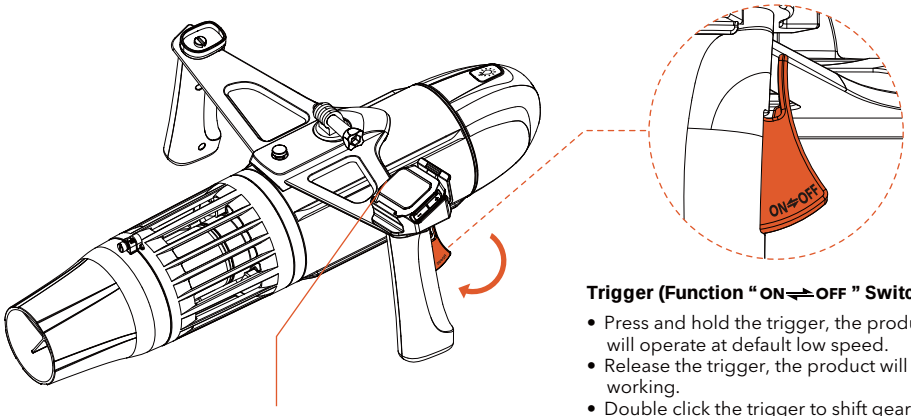

Remote Control Power Button " ⏻ "

- First, press the power button to turn on the remote control. (Press again to turn off.)

Trigger (Function " ON⇌OFF " Switch)

- Press and hold the trigger, the product will operate at default low speed.
- Release the trigger, the product will stop working.
- Double click the trigger to shift gears.

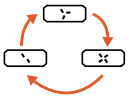

The three gears will switch cyclically.

Step 3: Press and hold the trigger to start the propeller, and release the button to stop.

Step 4: To turn off the power, press the **ON/OFF** " ⏻ " button on the remote control.

Note: The main unit and remote control will automatically power off if not used for 15 minutes, and you need to press the power button of the remote control again to turn it on.

6.4 How to use the nose illuminating system

Step 1: Press the " "to turn on the headlamp.

Step 2: Press the " "again to change the light mode between "***High Brightness Lighting " - " Energy-saving Mode***" and "***Emergency Flickering Signal Light***".

Step 3: After switching all three modes, press the " "again to turn off the light.

Note: In any mode, long press the headlamp key switch " " for more than 2.5 seconds to enter "***SOS Mode***".

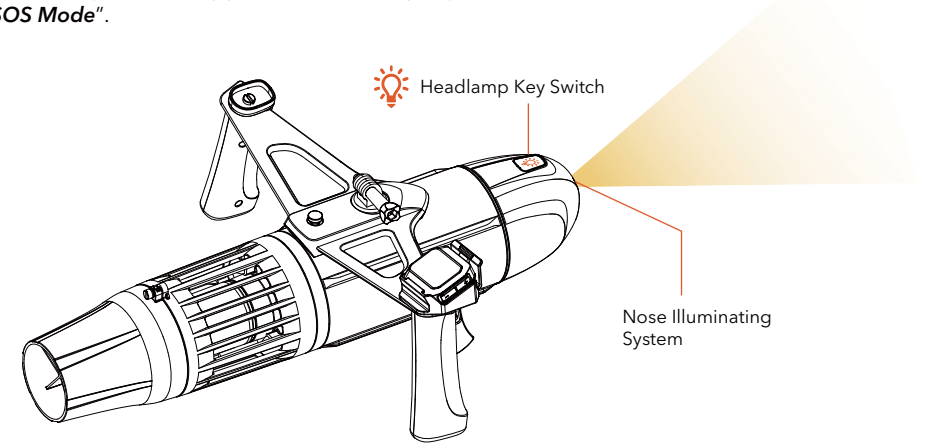

VII. MAINTENANCE AFTER USING BLUEDRIVE X / X PRO

7.1 Cleaning

To maintain good performance, please refer to the following steps for maintenance after each use:

Step 1: Completely immerse the product in a container full of clean water (not sea water) for about 30 minutes.

Step 2: Hold the operating handles with both hands. After the product is completely immersed, turn it on and run it slowly for one minute, repeat 2-3 times.

Step 3: Dry the body with a soft, clean and dry cloth.

Step 4: Wipe off the water drops on the product surface, open the battery compartment cover with dry hands, and remove the battery.

Step 5: Place the body unit and battery in a shady, cool and ventilated place to dry completely.

7.2 Troubleshooting

Problem Solving

If the propeller is entangled in foreign matters, the tail cylinder of the main unit can be removed for cleaning.

- Make sure to clean only when the power is off and the battery is removed.
- Be careful not to scratch your fingers when cleaning foreign matters on the propeller.

Step 1: Remove the quick-release locking screw of the tail cylinder at the rear of the main unit by turning anticlockwise. (Slotted tool can be used for installation/removal.)
Step 2: Rotate the tail cylinder anticlockwise and pull it outward.
Step 3: Rotate the propeller to remove foreign matters.
Step 4: After removing the foreign matters, reinstall via reverse operation.

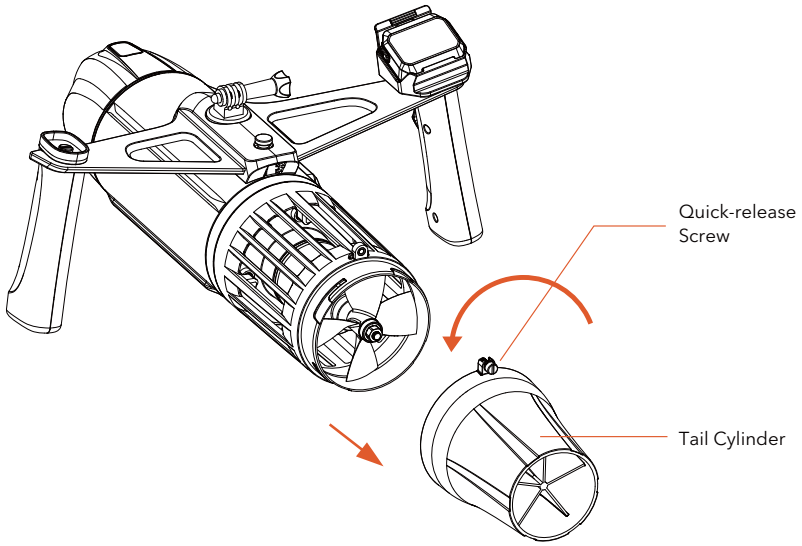

7.3 Storage

- Do not store equipment in high-temperatures, too dry and humid environments, in direct sunlight, or dusty environments for long periods of time. Harsh environments will cause damage to electronic equipment.
- If not being used for long periods of time, charge the battery every three months.
- Do not store the battery at temperatures higher than 45 °C (113 °F), as severe leakage may occur.
- Do not directly connect the battery terminals to metal objects. This will short-circuit the battery, causing overheating and discharging.
- Do not store loose batteries together. Battery terminals may contact each other, causing a short circuit.
- When not in use, the battery must be disconnected and stored in a waterproof and fireproof container.

VIII. PACKING AND TRANSPORTATION OF BLUEDRIVE X / X PRO

8.1 How to pack BLUEDRIVE X / X PRO in the carry bag

Step 1: Remove the battery.
Step 2: Put all parts into the corresponding compartments of the portable bag (as shown in the figure below).

8.2 Travelling by air

For information on transporting the BLUEDRIVE X / X PRO including battery by plane, please contact your operating airline. Li-ion batteries are subject to specific rules by airline authorities. Some airlines do not allow transporting Dive Scooters or batteries, so check in advance of travel.

IX. BATTERY USE & CARE INFORMATION

Your BLUEDRIVE X/ X PRO works with a Li-Ion battery, that needs to be handled with care. Please read this manual carefully and follow the instructions below to prevent accidents and injuries.

9.1 BATTERY USE

To ensure proper use of battery, read the following:

- Keep the battery in a dry area with enough ventilation where children do not have access and overheat. Ignition cannot happen.
- The lifespan of the battery is longer when it is not stored in too hot environments for longer than necessary. Heat damages the battery.
- Do not put the battery in your BLUEDRIVE X/ X PRO until shortly before use.
- Before removing the battery, open the nose and allow two minutes for any explosive gases to escape.
- Do not use the battery in temperatures above 40°C (104°F) as excessive off gassing may occur. Keep the battery and the BLUEDRIVE X/ X PRO in the shadow when not in use.
- Always ensure the BLUEDRIVE X/ X PRO is dried thoroughly before opening the nose.
- Never short circuit the battery or battery connectors.
- If the battery appears damaged or will not charge fully, the battery must be replaced.
- If battery life is noticeably reduced, the battery should be replaced.

Your BLUEDRIVE X/ X PRO works with a Li-Ion battery that needs to be handled with care. Potentially explosive gases might be released during its normal cycle of use (off gassing). Make sure that you read the manual carefully. Failure to do so can result in an explosion.

9.2 CHARGING BATTERIES

To ensure proper charging of the battery:

- Always make sure the charger is dry before use.
- Recharge the battery after use within 24 hours and recharge the battery at least every 2 months.
- Always charge your battery to the fullest before using your BLUEDRIVE X/ X PRO.
- Only use the charger supplied with your BLUEDRIVE X/ X PRO package .
- Do not charge the battery in temperatures above 45°C (113°F) as significant off gassing may occur.
- Keep the battery and BLUEDRIVE X/ X PRO in a dry and shadowy spot when not in use. Always connect the charger to the battery first and then plug the charger into the mains.
- After charging, disconnect from the mains first and then disconnect the battery from the charger.
- After charging is complete the battery will continue to off gas.
- Do not charge the battery while it is still inside the BLUEDRIVE X/ X PRO.
- Do not charge the battery near water.
- The charger gets quite warm while in use.
- If in doubt of the state of the battery, recharge it until the indicator on the battery charger indicates a full charge (green light).

Charging should only happen in a well-ventilated area, away from children and open flames or other ignition sources (cigarettes, sparks).

9.3 STORING BATTERIES

To ensure proper storing of battery, read the following:

- Do not store the battery in temperatures above 45°C (113°F) as significant off gassing may occur.
- Keep the battery and BLUEDRIVE X/ X PRO in a dry and shady spot when not in use.
- If the battery is not to be used for an extended period of time, store it in a well-ventilated area and away from children, heat and ignition sources and recharge it every two months to maintain charge and avoid excess off gassing.

DO NOT store the battery inside the BLUEDRIVE X/ X PRO.

9.4 BUYING BATTERIES

Additional batteries may be purchased separately.
Contact your local dealer or visit **www.aquamarina.com** for more information.

9.5 EQUIPMENT HANDLING

Do not burn, bury or mix this product with household waste. Improper disposal of the battery contained in this product may cause the battery to heat, break or catch fire, causing serious injury. The substance in the battery will cause a chemical risk to the environment. It is recommended to recycle electronic waste or harmful substances at the end of service life.

Local regulations and laws on the recycling and disposal of Li-ion batteries/ products containing Li-ion batteries will vary according to national and local governments. Check the laws and regulations corresponding to your place of residence to properly handle the batteries of the product. Users are responsible for properly disposing of their waste equipment in accordance with local regulations and laws.

Please contact your local or regional waste management office, household waste service or point of sale for more information about where batteries, electrical appliances or electronic waste should be placed.

X. IMPORTANT SAFETY PRECAUTIONS AND WARNINGS

- Children under the age of 14 should not be allowed to operate the BLUEDRIVE X/ X PRO. Note that only healthy and experienced swimmers are allowed to use BLUEDRIVE X/ X PRO.
- Do not use BLUEDRIVE X/ X PRO while tired or under the influence of alcohol, drugs or medication.
- A moment of inattention may result in serious personal injury.
- Using the BLUEDRIVE X/ X PRO during pregnancy is not allowed.
- Rinse with fresh water after each use, especially after use in salt water.
- Always charge the battery on a non-flammable base.

Ignoring the instructions in this manual or mishandling the BLUEDRIVE X/ X PRO could cause malfunction, operational problems to the device, damage, or personal injury. BLUEDRIVE X/ X PRO accepts no liability for any damage caused by actions that contradict this operating manual.

HANDLE BLUEDRIVE X/ X PRO WITH CARE

- Ensure sufficient battery charge remains for return to shore or surface.
- Protect the battery from mechanical damage. If the battery casing is damaged:
  - Do not use the battery anymore and do not charge it. There is a risk of fire.
  - If electrolytes leak from the damaged battery, avoid skin contact and breathing in the gases. If you come into contact with the electrolytes leaking from the battery (e.g. on the skin or eyes), rinse the affected area thoroughly with clear water. Contact a doctor immediately.
- Only charge the battery at environmental temperatures between 10°C (50°F) and 45°C (113°F).

The battery of your BLUEDRIVE X/ X PRO has been declared a hazardous item. Shipping companies must use original packaging to transport the product. Private transport is not affected by this rule. When undertaking private transport, ensure that the battery casing is not damaged.

MIND THE WATER INTAKE

- Never stick body parts, clothing or other objects into the water intake (grille) of the BLUEDRIVE X/ X PRO or even bring them close to it. Do not wear loose or flowing clothing or equipment that could be drawn into the water intake (grille) due to the caused suction.
- Particular care should be exercised when using the BLUEDRIVE X/ X PRO by someone with long hair or near anybody with long hair. Users with long hair should tie it up or wear a swimming cap when using the BLUEDRIVE X/ X PRO. The suction of the water intake may draw in loose body parts.
- Always check that no stones, rope, dirt or sand gets into the BLUEDRIVE X/ X PRO and clean up those parts which are within easy reach regularly if necessary.
- Never stick body parts, clothing or other objects into the nozzle on the back of the BLUEDRIVE X/ X PRO.
- Do not point the water jet towards your own or somebody else's face.

BE AWARE OF YOUR SURROUNDINGS

- Always inspect the swimming area to ensure it is free of hazards or obstacles such as boats and swimmers before using the BLUEDRIVE X/ X PRO.
- Be aware of appropriate water levels, tidal changes, dangerous currents, weather changes and strong offshore winds. Always scout unfamiliar water.

- Be careful not to hit other items when diving with the BLUEDRIVE X/ X PRO. Make sure to stay away from boats, bridges, rocks or any items which could hurt you.

PAY SPECIAL ATTENTION WHEN DIVING

- If you are not trained/certified in scuba, you should not use the BLUEDRIVE X/ X PRO below 3m (10ft) depth. The risk of suffering from pulmonary damage is the least within the range of 3m from the surface, though it cannot be eliminated entirely.
- When using the BLUEDRIVE X/ X PRO for scuba, ascents and descents should be made in accordance with recognized diving practices.
- Be careful not to get stuck underwater when diving with the BLUEDRIVE X/ X PRO. Make sure that you do not carry items that might get stuck and prevent you from a safe ascent.
- The BLUEDRIVE X/ X PRO is used underwater with the dive adapter.
- The BLUEDRIVE X/ X PRO power stops when the trigger is released.
- Only use the BLUEDRIVE X/ X PRO underwater. BLUEDRIVE X/ X PRO assumes no liability for off coming masks or goggles during use.

The BLUEDRIVE X/ X PRO should only be used for scuba by qualified divers.
Scuba-trained users will be able to use the BLUEDRIVE X/ X PRO below 3m (10 ft) at their own discretion but they too are warned of the same risks. Ascending too fast, or holding one's breath during ascent may cause damage totheir body.

BLUEDRIVE X/ X PRO EQUIPMENT

- With the consumption of battery power, the power will gradually weaken, and the equipment will automatically slow down and jump to a lower gear, or the high and middle gear will not be available. This belongs to the normal application scope.

Always charge battery to its fullest before using the BLUEDRIVE X/ X PRO.
Wait at least 30 minutes after charging before removing the battery from the charger or placing the battery into the battery housing. Failure to do so may result in an explosion.

WEAR PROPER CLOTHES

- The BLUEDRIVE X/ X PRO is not a personal floatation device. The BLUEDRIVE X/ X PRO does not have any flotation and will sink in water.
- When using the BLUEDRIVE X/ X PRO with SUP, canoe or kayak, always wear a life jacket and never go without a paddle. Only go over distances you can easily paddle back without BLUEDRIVE X/ X PRO support.

HOW TO HANDLE BLUEDRIVE X/ X PRO PROPERLY

- Only run the BLUEDRIVE X/ X PRO **when under water**.
- **Never open the nose in the water**.
- Do not use the BLUEDRIVE X/ X PRO below the recommended maximum depth of 10m/32.8ft (3 hours).

WHAT TO DO WHEN BLUEDRIVE X/ X PRO IS NOT IN USE

- After use, always take the BLUEDRIVE X/ X PRO out of the water.
- Always remove the battery from the unit when not in use.
- Do not store the battery in the unit.

MAINTENANCE OF YOUR BLUEDRIVE X/ X PRO

- After operation in salty or brackish water, wash all components in fresh water.
- You will extend the lifespan of your battery if you do not expose it to hot environments for long periods of time.
- Always keep the BLUEDRIVE X/ X PRO out of direct sunlight when not in use.

TROUBLESHOOTING

Issue	Solutions
Faulty Remote Control	1. No response to pressing the ON/OFF button, no indicator light on the remote control: check the battery level, please charge before use. 2. No response when pressing the trigger and no gear indicator light on the remote control: the remote control may not be in handheld mode, refer to the handheld mode instructions to set the remote control to handheld mode before controlling via the trigger. 3. The remote control signal is not sensitive. a. The distance is too far: please get closer to the propeller. b. The remote control is out of power or the power red indicator is on: please use it after fully charged. c. The remote control is not worn on the wrist under SUP board mode: please wear the remote control on the wrist to use it. 4. The remote control indicates the gear, but the thrusters do not operate: refer to "Thrusters Not Working" below. 5. Cannot be charged. a. Dirty contacts: clean with alcohol or special cleaner for electrical appliances before use. b. Loose contact or water damage to the product: replace with new parts or contact the after-sales service centre.
Headlight Failure	1. No response when pressing the headlamp switch button: check the battery level, please charge before use. 2. Cannot be charged. a. Dirty contacts: clean with alcohol or special cleaner for electrical appliances before use. b. Water damage to the product: replace with new parts or contact the service centre.
Thrusters Not Working	1. Check whether the battery pack is out of power. 2. Check whether the battery pack plug is connected tightly. 3. No pairing or failed to pair: clear the pairing or re-pair by referring to the pairing instructions.
Stalled Propeller Operation	1. Check whether there is fishing line or weed tangled in the propeller, if so, clean the propeller. 2. Check the battery charging state.
Excessive Thruster Noise and Wobble	1. Check whether there is fishing line or weed tangled in the propeller, if so, clean the propeller. 2. Check whether the propeller is damaged, if so, please contact the service centre. 3. Check for loose screws, if so, please contact the service centre. 4. Disconnect the power supply and toggle the propeller, the propeller should be able to turn freely and smoothly; if the motor is obstructed or locked, there may be foreign object in the motor, please contact the service centre.
Battery Not Charging	1. Dirty contacts: clean with alcohol or special cleaner for electrical appliances before use. 2. Check whether the charger plug is securely connected. 3. Loose contact or water damage to the battery: replace with new parts or contact the service centre.

XI. WARRANTY TERMS

Product warranty is **one year** after purchase. Any modification, usage outside the intended scope, or damage caused by improper operation not in accordance with this manual with void your warranty and will not be under the scope of the below terms.

This warranty is subject to the following limitations:

1. The warranty is valid only when this product is used for normal recreational activities and does not cover products used in rental or school operations.
2. AM will make the final warranty determination, which may require inspection and/or photos of the equipment, which clearly show the defect(s). If necessary, this information must be sent to the AM distributor in your country with prepaid postage. Product can be returned only if a return authorization number is given in advance by the AM distributor. The return authorization number must be clearly labelled on the outside of the package, or it will be refused.
3. If a product is deemed to be defective by AM, the warranty covers the repair or replacement of the defective product only. AM will not be responsible for any costs, losses, or damages incurred as a result of loss or misuse of this product.
4. This warranty does not cover damage caused by misuse, abuse, neglect, normal wear and tear including, but not limited to damage due to excessive heat exposure, damage caused by improper handling and storage, damage caused by use in waves or shore break, damage caused by filling or crashing in surf conditions, or damage caused by anything other than defects in material and workmanship.
5. Aqua Marina is entitled to refuse a warranty claim in case of the product was in any way altered or modified or parts and accessories were added that are not expressly permitted or recommended by Aqua Marina, previous services or repairs were not carried out by firms authorized by Aqua Marina, or non-original parts were used.
6. This warranty is void if any unauthorized repair, change or modification has been made to any part of the equipment.
7. The warranty for any repaired or replacement equipment is good from the date of the original purchase only.
8. The original purchase receipt must accompany all warranty claims. The name of the retailer and date of purchase must be clear and legible.
9. There are no warranties that extend beyond the warranty specified here in.

WARNING

This product is designed in accordance with standards for a specific use. Any modifications or transformations higher than that indicated by the manufacturer could result in serious risks for the user and will void the warranty.

www.aquamarina.com