TEST REPORT

Report No. .....:	**CHTEW1912017405**
Project No. ……..……..:	**SHT1912016905EW**
FCC ID..... :	**2AVFS-GEO10**
Applicant's name..... :	**Geotechvision Enterprises Limited**
Address.....:	44 Cowper Drive, Kingston 20, Jamaica W.I. JMK0020
Manufacturer.....:	DBETTER INTERNATIONAL LIMITED
Address.....:	Room803 6F., Chevalier House, 45-51 Chatham Road South, Tsim Sha Tsui, Kowloon
Test item description ..... :	**Tablet**
Trade Mark .....:	Geo
Model/Type reference.....:	GEO10
Listed Model(s) .....:	Geo10X
Standard ..... :	**47 CFR FCC Part 15 Subpart B**
Date of receipt of test sample……..:	Dec.12,2019
Date of testing……:	Dec.12,2019 ~ Dec.24,2019
Date of issue……..:	Dec.25,2019
Result..... ……..:	**Pass**

Report verification :

Compiled by (position+printed name+signature)..:	File administrators Yueming Li	Yueming.Li
Supervised by (position+printed name+signature)..:	Project Engineer Kiki Kong	Kiki Kong
Approved by (position+printed name+signature)..:	RF Manager Hans Hu	Hans Hu

Testing Laboratory Name ..... :	**Shenzhen Huatongwei International Inspection Co., Ltd.**
Address.....:	1/F, Bldg 3, Hongfa Hi-tech Industrial Park, Genyu Road, Tianliao, Gongming, Shenzhen, China

Shenzhen Huatongwei International Inspection Co., Ltd. All rights reserved.

This publication may be reproduced in whole or in part for non-commercial purposes as long as the Shenzhen Huatongwei International Inspection Co., Ltd. is acknowledged as copyright owner and source of the material. Shenzhen Huatongwei International Inspection Co., Ltd. takes no responsibility for and will not assume liability for damages resulting from the reader's interpretation of the reproduced material due to its placement and context.

The test report merely corresponds to the test sample.

Contents

1. TEST STANDARDS AND REPORT VERSION 3

1.1. Test Standards 3
1.2. Report version information 3

2. TEST DESCRIPTION 4

3. SUMMARY 5

3.1. Client Information 5
3.2. Product Description 5
3.3. EUT operation mode 5
3.4. Configuration of Tested System 5
3.5. Support unit used in test configuration 6

4. TEST ENVIRONMENT 7

4.1. Address of the test laboratory 7
4.2. Test Facility 7
4.3. Environmental conditions 8
4.4. Statement of the measurement uncertainty 8
4.5. Equipments Used during the Test 9

5. TEST CONDITIONS AND RESULTS 10

5.1. Conducted Emissions Test 10
5.2. Radiated Emissions Test 13

6. TEST SETUP PHOTOS OF THE EUT 17

7. EXTERNAL AND INTERNAL PHOTOS OF THE EUT 18

1. TEST STANDARDS AND REPORT VERSION

1.1. Test Standards

The tests were performed according to following standards:

47 CFR FCC Part 15 Subpart B - Unintentional Radiators

ANSI C63.4: 2014 – American National Standard for Methods of Measurement of Radio-Noise Emissions from Low-Voltage Electrical and Electronic Equipment in the Range of 9 kHz to 40GHz

1.2. Report version information

Revision No.	Date of issue	Description
N/A	2019-12-25	Original

2. TEST DESCRIPTION

Test Item	Section in CFR 47	Result	Test Engineer
Conducted Emissions	15.107(a)	PASS	Ding Si
Radiated Emissions	15.109(a)	PASS	Kang Yang

Note: The measurement uncertainty is not included in the test result.

3. SUMMARY

3.1. Client Information

Applicant:	Geotechvision Enterprises Limited
Address:	44 Cowper Drive, Kingston 20, Jamaica W.I. JMK0020
Manufacturer:	DBETTER INTERNATIONAL LIMITED
Address:	Room803 6F., Chevalier House, 45-51 Chatham Road South, Tsim Sha Tsui, Kowloon

3.2. Product Description

Name of EUT:	Tablet
Trade Mark:	Geo
Model No.:	GEO10
Listed Model(s)	Geo10X
Power supply:	DC 3.7V
Adapter information:	Model:BSY-F18Q Input:100-240Va.c.50/60Hz,0.5A Max Output:DC 5V/3A,7V,9V/2A,12V/1.5A,18W Max
Hardware version:	PC62_H_IPD
Software version:	andriid version 9

3.3. EUT operation mode

Test mode	Describe
Camera recording mode	Keep the EUT in Camera recording status
Video Playing mode	Keep the EUT in Video Playing status
Data exchange mode	Keep the EUT in Data exchange with PC status

Pre-scan all of above modes. Only show video playing mode for conducted emission, and data exchange mode for radiated emission, which is the worst case on the report.

.

3.4. Configuration of Tested System

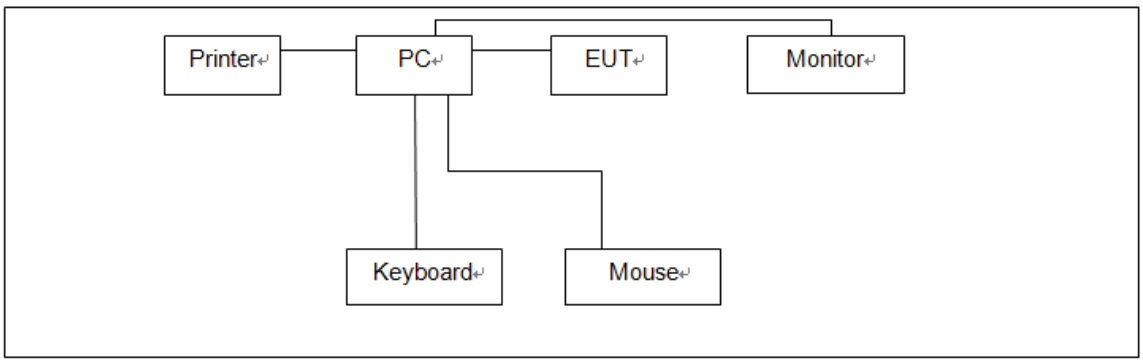

3.5. Support unit used in test configuration

Item	Equipment	Manufacturer	Model No.	FCC ID / FCC DoC	Data Cable	Power Cord
1	PC	DELL	OptiPlex 3020 MT	FCC DoC	N/A	Unshielded 1.8m
2	Monitor	DELL	E1912Hf	FCC DoC	N/A	Unshielded 1.8m
3	Keyboard	DELL	SK8115	FCC DoC	Unshielded, 1.5m	N/A
4	Mouse	DELL	MS111-T	FCC DoC	Unshielded, 1.5m	N/A
5	Printer	EPSON	L101	FCC DoC	N/A	Unshielded 1.8m

4. TEST ENVIRONMENT

4.1. Address of the test laboratory

Laboratory: Shenzhen Huatongwei International Inspection Co., Ltd.
Address: 1/F, Bldg 3, Hongfa Hi-tech Industrial Park, Genyu Road, Tianliao, Gongming, Shenzhen, China
Phone: 86-755-26748019 Fax: 86-755-26748089

4.2. Test Facility

The test facility is recognized, certified, or accredited by the following organizations:

CNAS-Lab Code: L1225

Shenzhen Huatongwei International Inspection Co., Ltd. has been assessed and proved to be in compliance with CNAS-CL01 Accreditation Criteria for Testing and Calibration Laboratories (identical to ISO/IEC17025: 2005 General Requirements) for the Competence of Testing and Calibration Laboratories.

A2LA-Lab Cert. No. 3902.01

Shenzhen Huatongwei International Inspection Co., Ltd. EMC Laboratory has been accredited by A2LA for technical competence in the field of electrical testing, and proved to be in compliance with ISO/IEC 17025: 2005 General Requirements for the Competence of Testing and Calibration Laboratories and any additional program requirements in the identified field of testing.

FCC-Registration No.: 762235

Shenzhen Huatongwei International Inspection Co., Ltd. EMC Laboratory has been registered and fully described in a report filed with the FCC (Federal Communications Commission). The acceptance letter from the FCC is maintained in our files. Registration 762235.

IC-Registration No.: 5377A

Two 3m Alternate Test Site of Shenzhen Huatongwei International Inspection Co., Ltd. has been registered by Certification and Engineering Bureau of Industry Canada for the performance of radiated measurements with Registration No. 5377A

ACA

Shenzhen Huatongwei International Inspection Co., Ltd. EMC Laboratory can also perform testing for the Australian C-Tick mark as a result of our A2LA accreditation.

4.3. Environmental conditions

During the measurement the environmental conditions were within the listed ranges:

Temperature:	15~35°C
Relative Humidity:	30~60 %
Air Pressure:	950~1050mba

4.4. Statement of the measurement uncertainty

The data and results referenced in this document are true and accurate. The reader is cautioned that there may be errors within the calibration limits of the equipment and facilities. The measurement uncertainty was calculated for all measurements listed in this test report acc. to CISPR 16 - 4 „Specification for radio disturbance and immunity measuring apparatus and methods – Part 4: Uncertainty in EMC Measurements“ and is documented in the Shenzhen Huatongwei International Inspection Co., Ltd quality system acc. to DIN EN ISO/IEC 17025. Furthermore, component and process variability of devices similar to that tested may result in additional deviation. The manufacturer has the sole responsibility of continued compliance of the device.

Hereafter the best measurement capability for Shenzhen Huatongwei laboratory is reported:

Test	Range	Measurement Uncertainty	Notes
Radiated Emissions	30~1000MHz	4.90 dB	(1)
Radiated Emissions	1~18GHz	4.96 dB	(1)
Conducted Disturbance	0.15~30MHz	3.02 dB	(1)

(1) This uncertainty represents an expanded uncertainty expressed at approximately the 95% confidence level using a coverage factor of k=1.96.

4.5. Equipments Used during the Test

● Conducted Emission							
Used	Test Equipment	Manufacturer	Equipment No.	Model No.	Serial No.	Last Cal. Date (YY-MM-DD)	Next Cal. Date (YY-MM-DD)
●	Shielded Room	Albatross projects	HTWE0114	N/A	N/A	2018/09/28	2023/09/27
●	EMI Test Receiver	R&S	HTWE0111	ESCI	101247	2019/10/26	2020/10/25
●	Artificial Mains	SCHWARZBECK	HTWE0113	NNLK 8121	573	2019/10/23	2020/10/22
●	Pulse Limiter	R&S	HTWE0033	ESH3-Z2	100499	2019/10/23	2020/10/22
●	RF Connection Cable	HUBER+SUHNER	HTWE0113-02	ENVIROFLEX_142	EF-NM-BNCM-2M	2019/10/23	2020/10/22
●	Test Software	R&S	N/A	ES-K1	N/A	N/A	N/A

● Radiated emission-6th test site							
Used	Test Equipment	Manufacturer	Equipment No.	Model No.	Serial No.	Last Cal. Date (YY-MM-DD)	Next Cal. Date (YY-MM-DD)
●	Semi-Anechoic Chamber	Albatross projects	HTWE0127	SAC-3m-02	C11121	2018/09/30	2021/09/29
●	EMI Test Receiver	R&S	HTWE0099	ESCI	100900	2019/10/26	2020/10/25
●	Loop Antenna	R&S	HTWE0170	HFH2-Z2	100020	2018/04/02	2021/04/01
●	Ultra-Broadband Antenna	SCHWARZBECK	HTWE0119	VULB9163	546	2017/04/05	2020/04/04
●	Pre-Amplifer	SCHWARZBECK	HTWE0295	BBV 9742	N/A	2019/11/14	2020/11/13
●	RF Connection Cable	HUBER+SUHNER	HTWE0062-01	N/A	N/A	2019/08/21	2020/08/20
●	RF Connection Cable	HUBER+SUHNER	HTWE0062-02	SUCOFLEX 104	501184/4	2019/05/27	2020/05/26
●	Test Software	R&S	N/A	ES-K1	N/A	N/A	N/A

● Radiated emission-7th test site							
Used	Test Equipment	Manufacturer	Equipment No.	Model No.	Serial No.	Last Cal. Date (YY-MM-DD)	Next Cal. Date (YY-MM-DD)
●	Semi-Anechoic Chamber	Albatross projects	HTWE0122	SAC-3m-01	N/A	2018/09/27	2021/09/26
●	Spectrum Analyzer	R&S	HTWE0098	FSP40	100597	2019/10/26	2020/10/25
●	Horn Antenna	SCHWARZBECK	HTWE0126	9120D	1011	2017/04/01	2020/03/31
●	Horn Antenna	SCHWARZBECK	HTWE0103	BBHA9170	25841	2017/03/27	2020/03/26
●	Broadband Horn Antenna	SCHWARZBECK	HTWE0103	BBHA9170	BBHA9170472	2018/10/11	2021/10/11
●	Pre-amplifier	CD	HTWE0071	PAP-0102	12004	2019/11/14	2020/11/13
●	Broadband Pre-amplifier	SCHWARZBECK	HTWE0201	BBV 9718	9718-248	2019/05/23	2020/05/22
●	RF Connection Cable	HUBER+SUHNER	HTWE0120-01	6m 18GHz S Serisa	N/A	2019/05/10	2020/05/09
●	RF Connection Cable	HUBER+SUHNER	HTWE0120-02	6m 3GHz RG Serisa	N/A	2019/05/10	2020/05/09
●	RF Connection Cable	HUBER+SUHNER	HTWE0120-03	6m 3GHz RG Serisa	N/A	2019/05/10	2020/05/09
●	RF Connection Cable	HUBER+SUHNER	HTWE0120-04	6m 3GHz RG Serisa	N/A	2019/05/10	2020/05/09
●	RF Connection Cable	HUBER+SUHNER	HTWE0121-01	6m 18GHz S Serisa	N/A	2019/05/10	2020/05/09
●	Test Software	Audix	N/A	E3	N/A	N/A	N/A

5. TEST CONDITIONS AND RESULTS

5.1. Conducted Emissions Test

LIMIT

FCC CFR Title 47 Part 15 Subpart B Section 15.107:

Frequency range (MHz)	Limit (dBuV)	
	Quasi-peak	Average
0.15-0.5	66 to 56*	56 to 46*
0.5-5	56	46
5-30	60	50

* Decreases with the logarithm of the frequency.

TEST CONFIGURATION

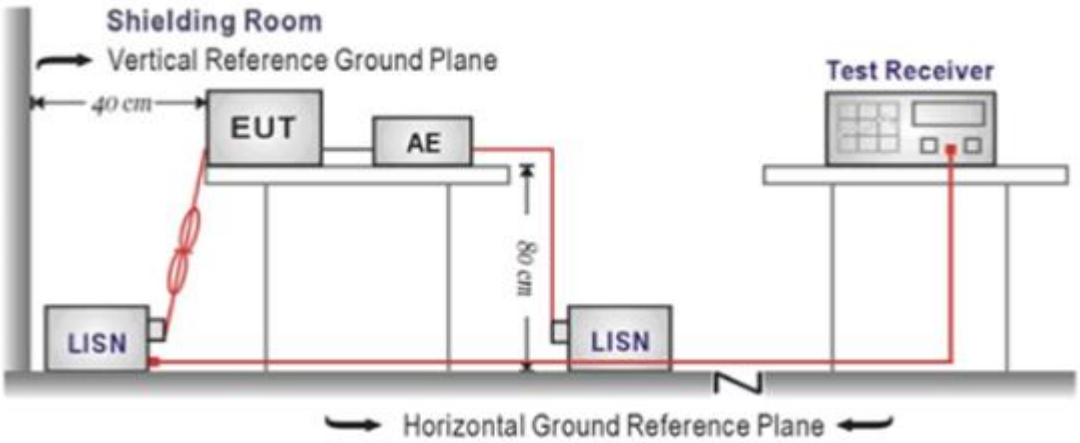

TEST PROCEDURE

1. The EUT was setup according to ANSI C63.4:2014
2. The EUT was placed on a plat form of nominal size, 1 m by 1.5 m, raised 80 cm above the conducting ground plane. The vertical conducting plane was located 40 cm to the rear of the EUT. All other surfaces of EUT were at least 80 cm from any other grounded conducting surface.
3. The EUT and simulators are connected to the main power through a line impedance stabilization network (LISN). The LISN provides a 50ohm / 50uH coupling impedance for the measuring equipment.
4. The peripheral devices are also connected to the main power through a LISN. (Please refer to the block diagram of the test setup and photographs)
5. Each current-carrying conductor of the EUT power cord, except the ground (safety) conductor,was individually connected through a LISN to the input power source.
6. The excess length of the power cord between the EUT and the LISN receptacle were folded back and forth at the center of the lead to form a bundle not exceeding 40 cm in length.
7. Conducted emissions were investigated over the frequency range from 0.15MHz to 30MHz using a receiver bandwidth of 9 kHz.
8. During the above scans, the emissions were maximized by cable manipulation.

TEST MODE:

Please refer to the clause 3.3

TEST RESULTS

☒ **Passed** ☐ **Not Applicable**

Test Line:	L

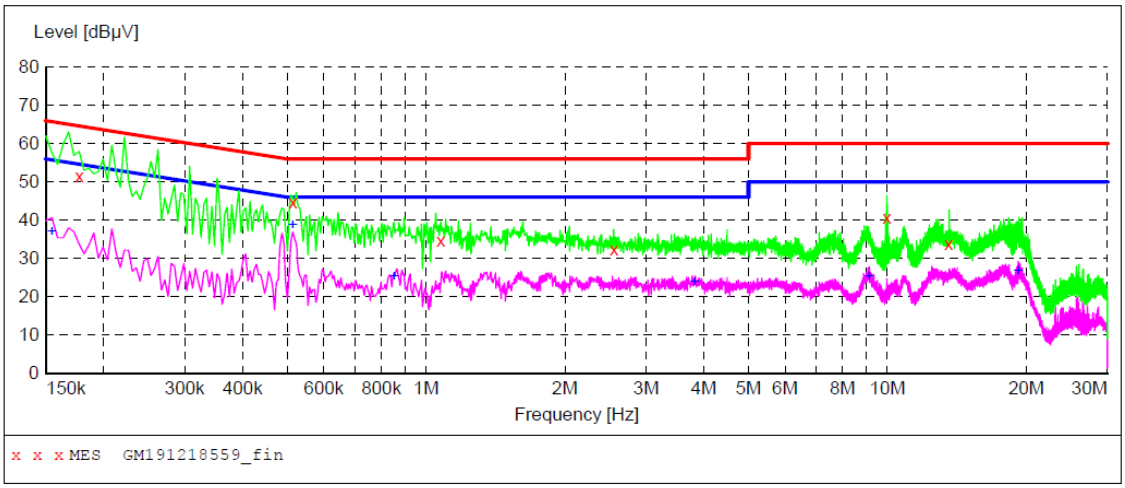

MEASUREMENT RESULT: "GM191218559_fin"

12/18/2019 9:10PM

Frequency MHz	Level dBµV	Transd dB	Limit dBµV	Margin dB	Detector	Line	PE
0.177000	51.60	10.1	65	13.0	QP	L1	GND
0.514500	44.70	10.0	56	11.3	QP	L1	GND
1.077000	34.60	10.0	56	21.4	QP	L1	GND
2.553000	32.50	10.0	56	23.5	QP	L1	GND
9.964500	40.70	10.2	60	19.3	QP	L1	GND
13.573500	33.90	10.2	60	26.1	QP	L1	GND

MEASUREMENT RESULT: "GM191218559_fin2"

12/18/2019 9:10PM

Frequency MHz	Level dBµV	Transd dB	Limit dBµV	Margin dB	Detector	Line	PE
0.154500	37.00	10.1	56	18.8	AV	L1	GND
0.514500	38.70	10.0	46	7.3	AV	L1	GND
0.852000	25.20	9.9	46	20.8	AV	L1	GND
3.817500	23.70	10.0	46	22.3	AV	L1	GND
9.118500	25.20	10.2	50	24.8	AV	L1	GND
19.203000	26.70	10.3	50	23.3	AV	L1	GND

Test Line:	N

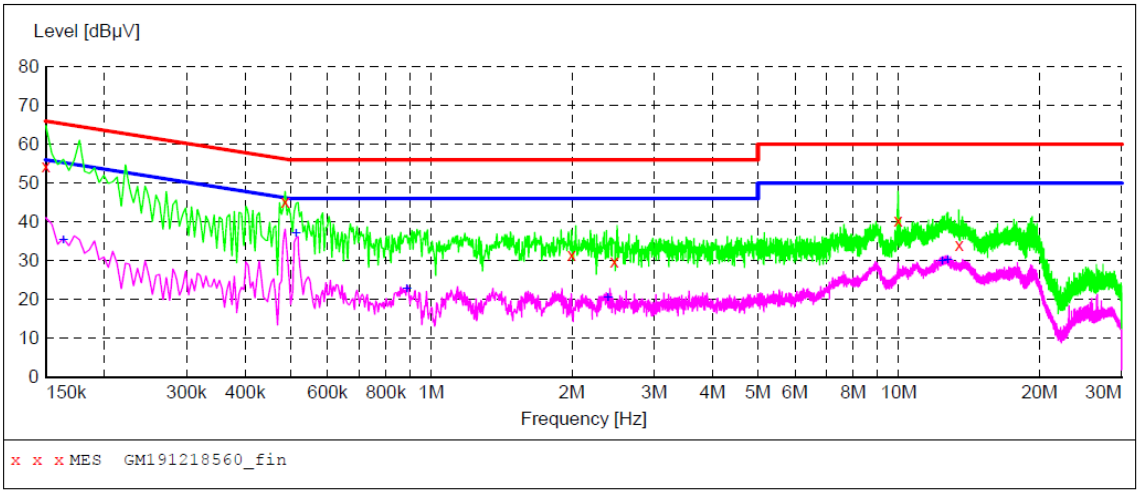

MEASUREMENT RESULT: "GM191218560_fin"

12/18/2019 9:13PM

Frequency MHz	Level dBµV	Transd dB	Limit dBµV	Margin dB	Detector	Line	PE
0.150000	54.30	10.1	66	11.7	QP	N	GND
0.487500	45.20	10.0	56	11.0	QP	N	GND
1.999500	31.60	10.0	56	24.4	QP	N	GND
2.467500	29.70	10.0	56	26.3	QP	N	GND
9.969000	40.50	10.2	60	19.5	QP	N	GND
13.474500	34.20	10.2	60	25.8	QP	N	GND

MEASUREMENT RESULT: "GM191218560_fin2"

12/18/2019 9:13PM

Frequency MHz	Level dBµV	Transd dB	Limit dBµV	Margin dB	Detector	Line	PE
0.163500	35.30	10.1	55	20.0	AV	N	GND
0.514500	36.90	10.0	46	9.1	AV	N	GND
0.888000	22.60	9.9	46	23.4	AV	N	GND
2.386500	20.30	10.0	46	25.7	AV	N	GND
12.390000	29.80	10.2	50	20.2	AV	N	GND
12.718500	30.00	10.2	50	20.0	AV	N	GND

5.2. Radiated Emissions Test

LIMIT

FCC CFR Title 47 Part 15 Subpart B Section 15.109

Frequency	Limit (dBuV/m @3m)	Value
30MHz-88MHz	40.00	Quasi-peak
88MHz-216MHz	43.50	Quasi-peak
216MHz-960MHz	46.00	Quasi-peak
960MHz-1GHz	54.00	Quasi-peak
Above 1GHz	54.00	Average
	74.00	Peak

TEST CONFIGURATION

- 30MHz ~ 1GHz

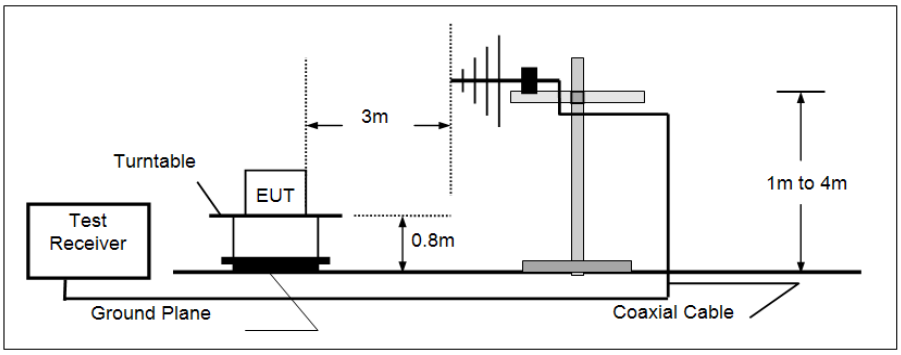

- Above 1GHz

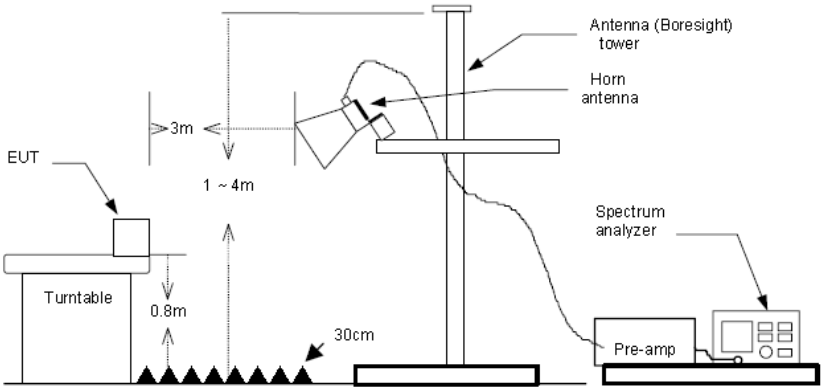

TEST PROCEDURE

1. The EUT was tested according to ANSI C63.4:2014.
2. The EUT is placed on a turn table which is 0.8 meter above ground.
3. The turn table is rotated 360 degrees to determine the position of the maximum emission level.
4. The EUT waspositioned such that the distance from antenna to the EUT was 3 meters.
5. The antenna is scanned from 1 meter to 4 meters to find out the maximum emission level. Thisis repeated for both horizontal and vertical polarization of the antenna.
6. Use the following spectrum analyzer settings
   (1) Span shall wide enough to fully capture the emission being measured;
   (2) Below 1GHz,
   RBW=120KHz, VBW=300KHz, Sweep=auto, Detector function=peak, Trace=max hold;
   If the emission level of the EUT measured by the peak detectoris 3 dB lower than the applicable limit, the peak emission level will be reported. Otherwise, theemission measurement will be repeated using the quasi-peak detector and reported.
   (3) From 1GHz to 5th harmonic, RBW=1MHz, VBW=3MHz

TEST MODE:

Please refer to the clause 3.3

TEST RESULTS

☒ **Passed** ☐ **Not Applicable**

Note: Final Level =Receiver Read level + Antenna Factor + Cable Loss – Preamplifier Factor
The emission levels of frequency above 6GHz are very lower than limit and not show in test report.

Polarization:	Horizontal

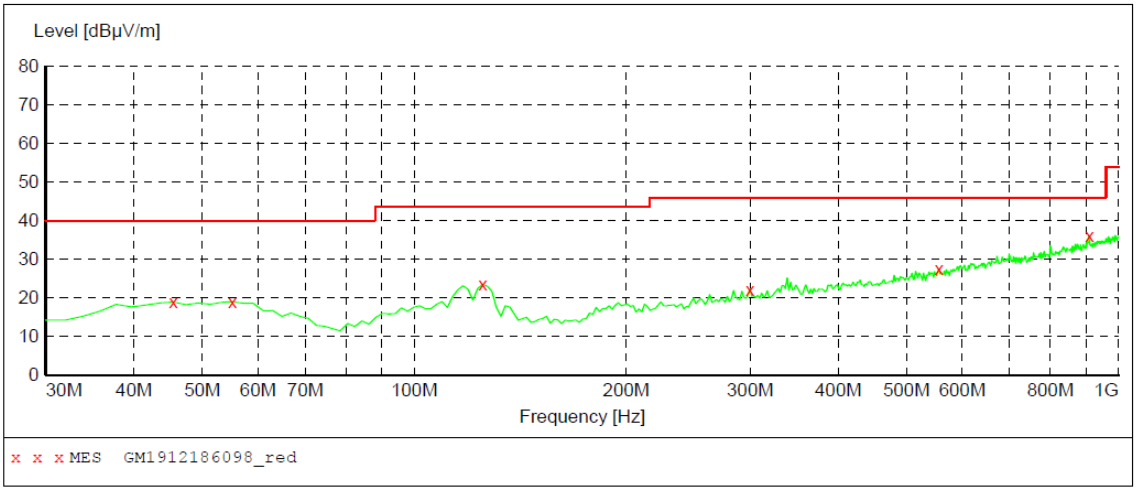

MEASUREMENT RESULT: "GM1912186098_red"

12/18/2019 10:40PM

Frequency MHz	Level dBµV/m	Transd dB	Limit dBµV/m	Margin dB	Det.	Height cm	Azimuth deg	Polarization
45.520000	18.90	-8.4	40.0	21.1	QP	100.0	255.00	HORIZONTAL
55.220000	19.00	-8.4	40.0	21.0	QP	100.0	106.00	HORIZONTAL
125.060000	23.50	-12.3	43.5	20.0	QP	300.0	59.00	HORIZONTAL
299.660000	22.20	-6.4	46.0	23.8	QP	300.0	211.00	HORIZONTAL
555.740000	27.50	0.3	46.0	18.5	QP	100.0	39.00	HORIZONTAL
908.820000	36.10	7.3	46.0	9.9	QP	100.0	168.00	HORIZONTAL

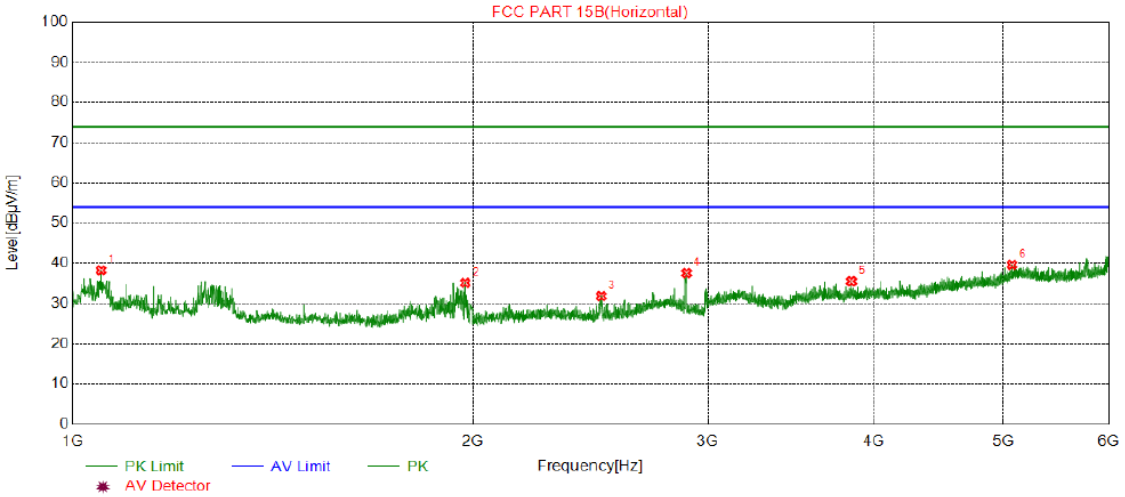

Suspected Data List								
NO.	Freq. [MHz]	Reading [dBµV/m]	Factor [dB]	Level [dBµV/m]	Limit [dBµV/m]	Margin [dB]	Polarity	Detector
1	1051.250	45.52	-7.24	38.28	74.00	35.72	Horizontal	PK
2	1972.500	40.20	-5.01	35.19	74.00	38.81	Horizontal	PK
3	2496.250	33.97	-2.11	31.86	74.00	42.14	Horizontal	PK
4	2892.500	36.99	0.58	37.57	74.00	36.43	Horizontal	PK
5	3846.250	33.27	2.30	35.57	74.00	38.43	Horizontal	PK
6	5078.125	31.08	8.59	39.67	74.00	34.33	Horizontal	PK

Polarization:	Vertical

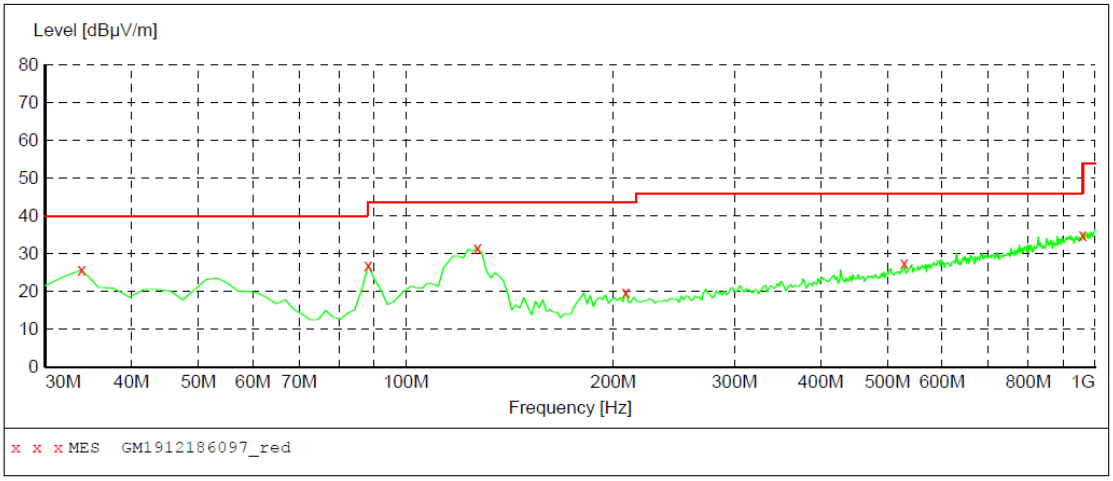

MEASUREMENT RESULT: "GM1912186097_red"

12/18/2019 10:37PM

Frequency MHz	Level dBµV/m	Transd dB	Limit dBµV/m	Margin dB	Det.	Height cm	Azimuth deg	Polarization
33.880000	25.70	-12.1	40.0	14.3	QP	100.0	0.00	VERTICAL
88.200000	26.90	-12.6	43.5	16.6	QP	100.0	211.00	VERTICAL
127.000000	31.60	-12.5	43.5	11.9	QP	100.0	199.00	VERTICAL
208.480000	19.90	-9.9	43.5	23.6	QP	100.0	127.00	VERTICAL
528.580000	27.40	-0.5	46.0	18.6	QP	100.0	199.00	VERTICAL
959.260000	34.90	8.4	46.0	11.1	QP	100.0	89.00	VERTICAL

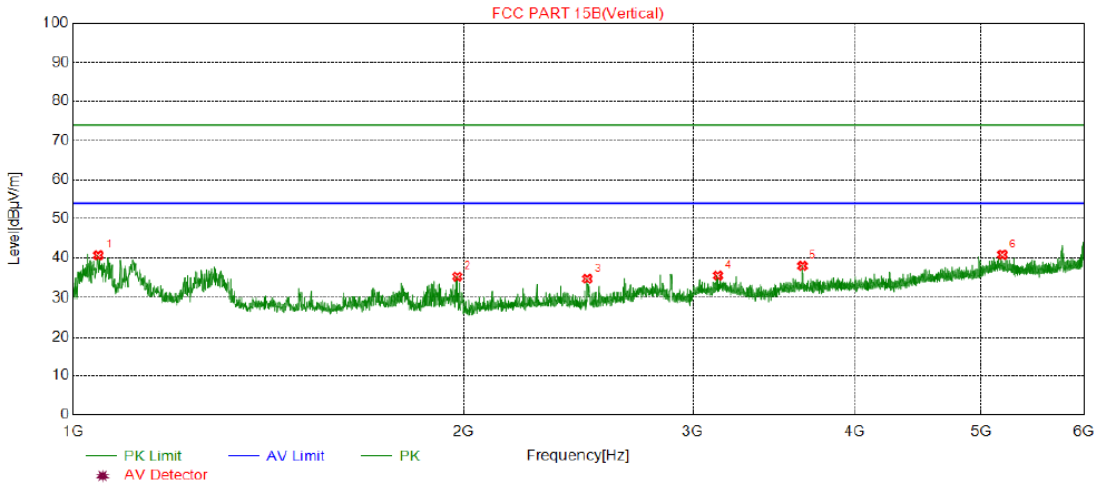

Suspected Data List

NO.	Freq. [MHz]	Reading [dBµV/m]	Factor [dB]	Level [dBµV/m]	Limit [dBµV/m]	Margin [dB]	Polarity	Detector
1	1046.250	47.99	-7.28	40.71	74.00	33.29	Vertical	PK
2	1976.875	40.19	-4.96	35.23	74.00	38.77	Vertical	PK
3	2488.750	36.82	-2.14	34.68	74.00	39.32	Vertical	PK
4	3136.875	35.00	0.51	35.51	74.00	38.49	Vertical	PK
5	3645.000	36.48	1.51	37.99	74.00	36.01	Vertical	PK
6	5193.125	31.89	8.97	40.86	74.00	33.14	Vertical	PK

6. TEST SETUP PHOTOS OF THE EUT

Conducted Emissions (AC Mains)

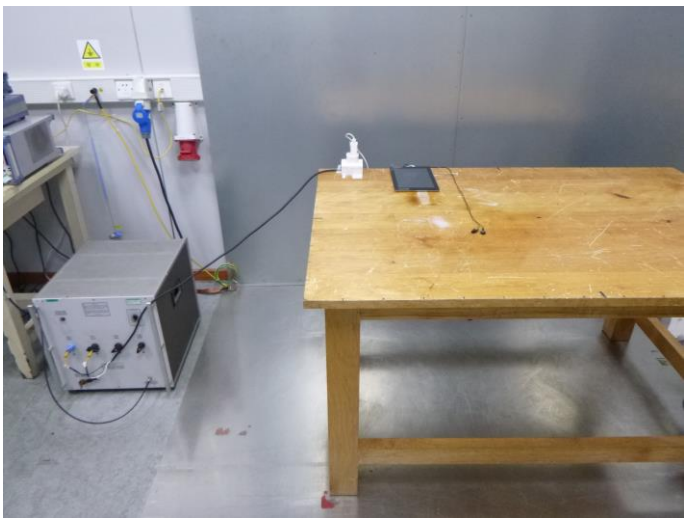

Radiated Emissions (30MHz-1GHz)

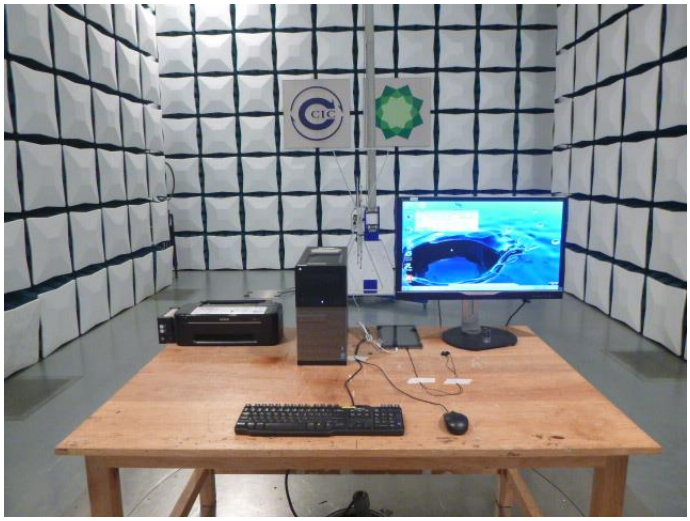

Radiated Emissions (Above 1GHz)

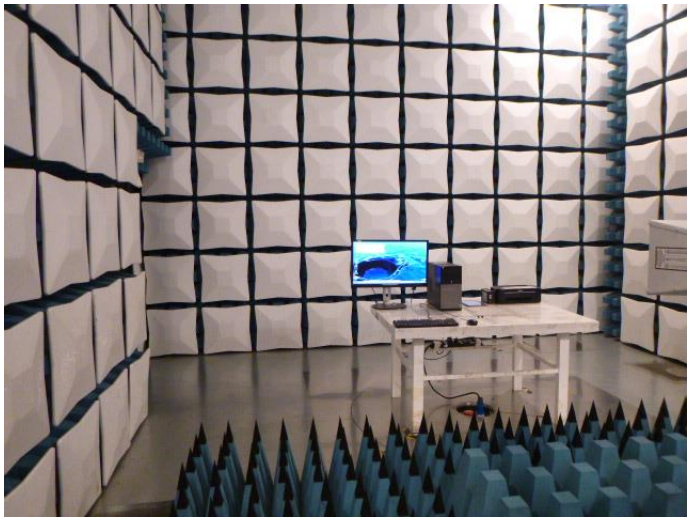

7. EXTERNAL AND INTERNAL PHOTOS OF THE EUT

Reference to the test report No.: CHTEW1912017401.

--------End of Report--------