W60

Reverse osmosis purification machine

Operating Manual

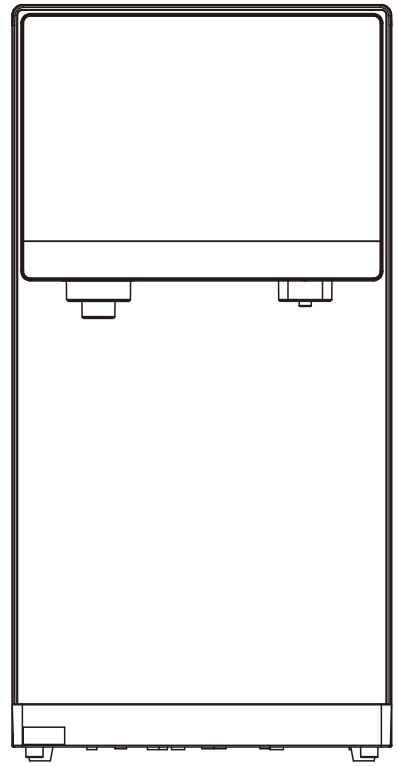

Dear customers,

Thank you for choosing the reverse osmosis purification machine produced by our company.

In order to use and maintain this product correctly, please read this instruction manual carefully before installation and use.

Contents

Packing List.....01

Product parameters.....02

Schematic diagram of products.....03

Product function introduction.....05

Waterway Installation Diagram 16

Steps for replacement of bubble tank.....17

Replacement of filter element.....19

Function of filter element.....21

Fault elimination.....22

Fault description.....23

List of harmful substances.....24

This machine adopts RO reverse osmosis filtration technology, rapid heating technology,compressor refrigeration technology that all integrated in one free installation of table type carbonating water purifier. It can remove harmful substances in water effectively, ensure the safety of water quality, let you drink safe and healthy water every day. Besides,the water purifier is equipped with fast heating function which could heat the water to drinkable temperature within 3 second, and integrated with the waterway structure, making your use more simple and safe.

This machine can be placed in the living room, bedroom, office and all kinds of places. You can use the purifier when be plugged in,which is more convenient and fast.It's the irreplaceable choice for you to drink safe and healthy water.

Warning: Changes or modifications to this unit not expressly approved by the party responsible for compliance could void the user' s authority to operate the equipment.

Note: This equipment has been tested and found to comply with the limits for a Class B digital device, pursuant to part 15 of the FCC Rules. These limits are designed to provide reasonable protection against harmful interference in a residential installation. This equipment generates, uses and can radiate radio frequency energy and, if not installed and used in accordance with the instructions, may cause harmful interference to radio communications. However, there is no guarantee that interference will not occur in a particular installation. If this equipment does cause harmful interference to radio or television reception, which can be determined by turning the equipment off and on, the user is encouraged to try to correct the interference by one or more of the following measures:

-- Reorient or relocate the receiving antenna.
-- Increase the separation between the equipment and receiver.
-- Connect the equipment into an outlet on a circuit different from that to which the receiver is connected.
-- Consult the dealer or an experienced radio/TV technician for help.

To maintain compliance with FCC's RF exposure guidelines, the distance must be at least 20cm between the radiator and your body, and fully supported by the operating and installation configurations of the transmitter and its antenna(s).

Remarks

1. Unpack the package, the machine should be stand for 24 hours before used.
2. The machine is equipped with a forced water change reminder, after the water change indicator is on, the concentrated water in the water tank must be poured out and fresh tap water must be added (it is strictly forbidden to add water to the water tank continuously).
3. It is strictly forbidden to move the machine at will. It is necessary to empty the water tank before moving the machine.
4.Don't washing the body with water.
5.Don't use universal sockets and other electrical appliances at the same time. Socket not less than 10a should be used.
6.Don't place the water receiver in a suspended way. Put it on table board.
7.Don't add turbid tap water, ice cube and other mixed liquids such as milk and fruit juice to the water tank.
8.Don't extend the water outlet nozzle into the cup rim when taking water, so as to avoid danger for blockage of the outlet nozzle by boiling water.
9.The drinking machine can be used by children aged 8 years and above and people with physical, sensory or mental disabilities or lack of experience and knowledge, as long as they are under supervision or guidance on safe use of the drinking machine and understand the risks involved. No child should clean or maintain the machine without supervision.
10.If the power line is damaged, it must be replaced by the manufacturer, service agent or relevant professionals, so as to avoid danger.
11.Stop using the machine when the intake water temperature or environment temperature is lower than 5°C or higher than 38°C.
12.If you take low temperature water immediately after taking high temperature water, the temperature of the fresh water may be high, please be aware of avoiding scald.
13.When the raw water does not meet the municipal tap water standard (including large silt content and excessive TDS), the service life of the filter element may be reduced.
14.To avoid danger, please place the water purifying and drinking machine on a flat table board. (The inclination of the table board should not be larger than 10°).
15. Operating voltage range: 220V~±10%.
16.Before being delivered from the factory, the complete machine is filled with water for full inspection, so it is normal that there is some residual water inside the machine.

Packing List

The package of the complete machine should include the following components

Reverse osmosis purification machine	1 set
Water receiver	1 set
User manual	1 set
Inlet three-valve + ball valve + flange	1 set
PE water pipe	1 volume

Product parameters

Product name	Reverse osmosis purification machine
Product model	W60
Rated voltage	120V~
Rated frequency	60Hz
Rated power	2250W
Rated heating power	2200W
Rated cooling power	120W
Water heating capacity	18L/h(⩾90℃)
Water cooling capacity	3L/h(⩾4℃)
Working pressure	0.4~0.6MPa
Applicable water source	City water
Applicable water temperature	5-38℃
Water tank capacity	5L
Net weight	20 kg
Dimensions	467x220x430mm

Schematic diagram of products

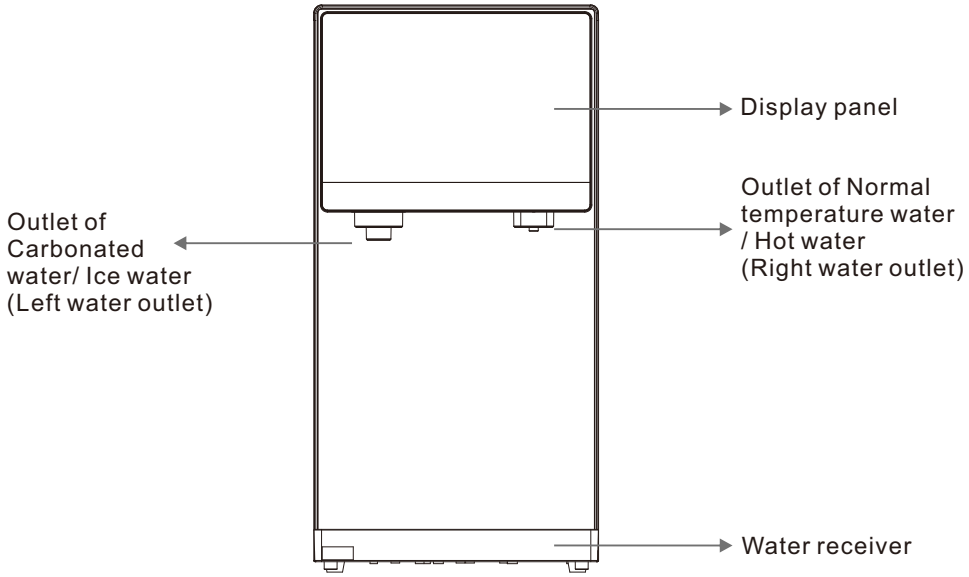

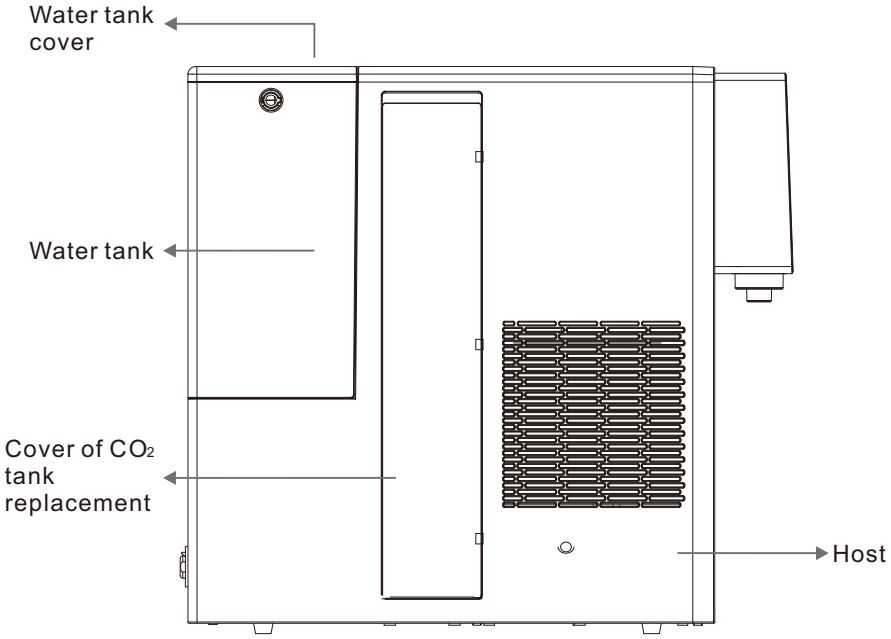

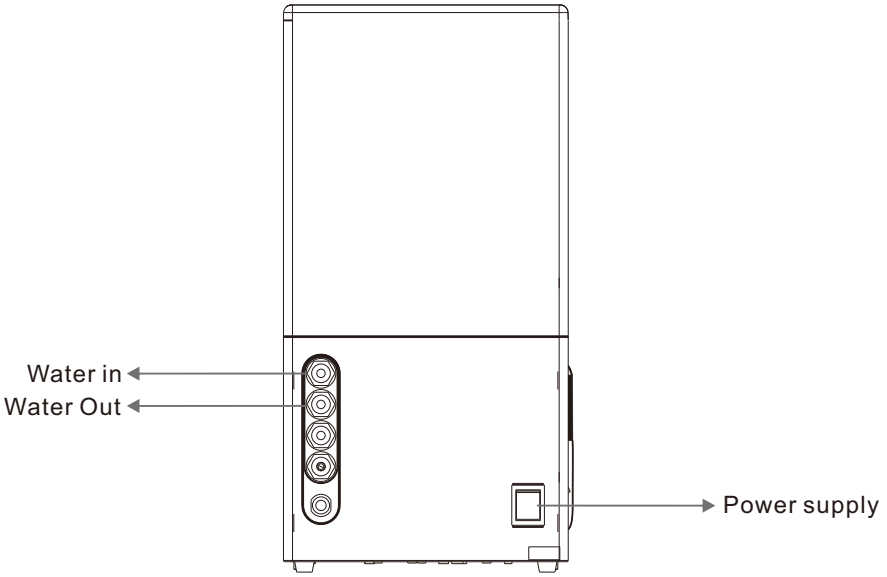

Product function introduction

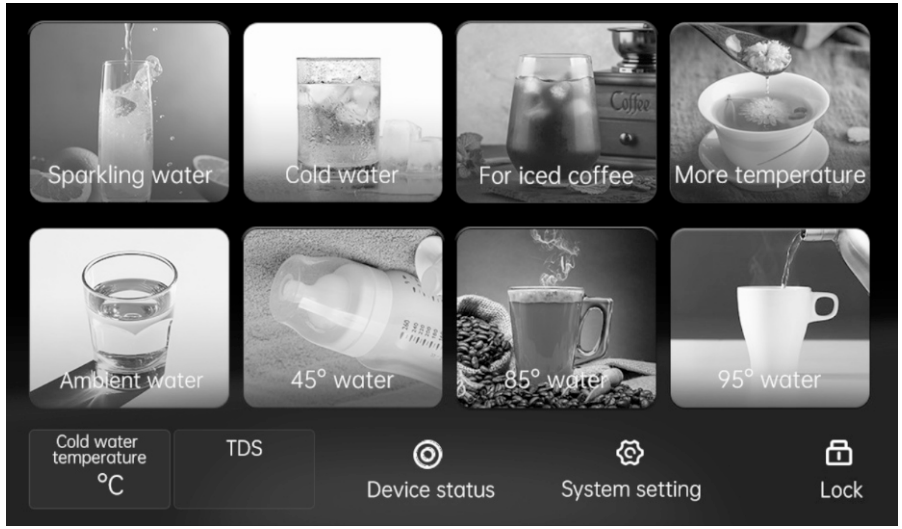

W60 Machine operation panel

Insert the plug ,switch on the power, buzzer will sound “Ding”, display panel will light up after initialization completed. The machine will enter sleeping mode. The display panel will light off if no operation in 5 minutes.
Touch the main screen to light up the display panel.

Notes:
Operated under standby mode in main screen : (Buzzer will sound “Ding” when press the functional button each time. When switch on the power each time, the right side water outlet will always flow out normal temperature water in 5 seconds in first time.

Sparking water: Press “ ”,it will jump to below screen page, choose the cup 150ml\300ml\500ml, adjust the concentration of sparking water, press confirmation when finished setting. The screen will jump to outlet page, left side water outlet will flow out. It will jump back to below screen page when finished water outlet.

Cold water: Press “ ”, blue LED light will light up, it will jump to below screen page, choose the cup 150ml\300ml\500ml, adjust the temperature of cold water, noted that the operation is only for temperature setting of cold water for next time,invalid for this time. Press confirmation when finished setting. The screen will jump to outlet page, left side water outlet will flow out. It will jump back to below screen page when finished water outlet.

For ice coffee: Press “ ”, blue led light will light up, it will jump to below screen page, choose the cup 150ml\300ml\500ml.Press confirmation when finished setting. The screen will jump to outlet page, left side water outlet will flow out. It will jump back to below screen page when finished water outlet.

Ambient water: Press “ ”,white led light will light up, it will jump to below screen page, choose the cup 150ml\300ml\500ml\1000ml.Press c onfirmation when finished setting. The screen will jump to outlet page, right water outlet will flow out. It will jump back to below screen page when finished water outlet.

95℃ water: Press “ ”, red LED light will light up, it will jump to below screen page, choose the cup 150ml\300ml\500ml.Press confirmation when finished setting. The screen will jump to outlet page, right water outlet will flow out. It will jump back to below screen page when finished water outlet.

Notes : long press button of 95 ℃ water for 5 seconds as shown, the screen will display the button of “+” “-” to adjust the water temperature of hot water.

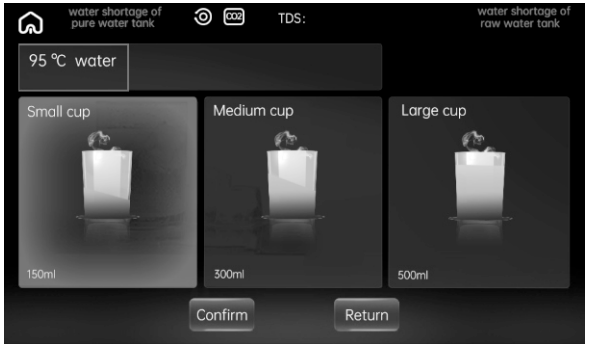

85℃ water: Press “ ”, red LED light will light up, it will jump to below screen page, choose the cup 150ml\300ml\500ml.Press confirmation when finished setting. The screen will jump to outlet page, right side water outlet will flow out. It will jump back to below screen page when finished water outlet.

45℃ water: Press “ ”, yellow led light will light up, it will jump to below screen page, choose the cup 150ml\300ml\500ml.Press confirmation when finished setting. The screen will jump to outlet page, right side water outlet will flow out. It will jump back to below screen page when finished water outlet.

More temperature:Press “ ” , it will jump to below screen page for 80℃ water ,70℃ water,60℃ water,50℃ water.

50℃ water : Press “ ”, yellow led light will light up, it will jump to below screen page, choose the cup 150ml\300ml\500ml. Press confirmation when finished setting. The screen will jump to outlet page, right side water outlet will flow out. It will jump back to below screen page when finished water outlet.

60℃ water : Press “ ”, yellow led light will light up, it will jump to below screen page, choose the cup 150ml\300ml\500ml.Press confirmation when finished setting. The screen will jump to outlet page, right side water outlet will flow out. It will jump back to below screen page when finished water outlet.

70℃ water : Press “

”, red led light will light up, it will jump to below screen page, choose the cup 150ml\300ml\500ml.Press confirmation when finished setting. The screen will jump to outlet page, right side water outlet will flow out. It will jump back to below screen page when finished water outlet.

80℃ water : Press “

”, red led light will light up, it will jump to below screen page, choose the cup 150ml\300ml\500ml.Press confirmation when finished setting. The screen will jump to outlet page, right side water outlet will flow out. It will jump back to below screen page when finished water outlet.

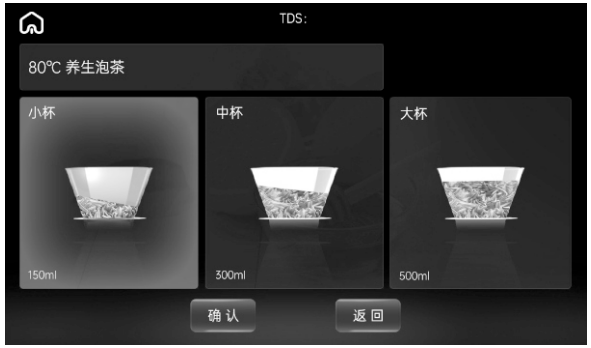

Filter status:It will remind the replacement of filter when its life expired, and jump to Reset screen page.

Filter life remain > 20% Filter life 20% ≧ remain >0%

Filter life : zero

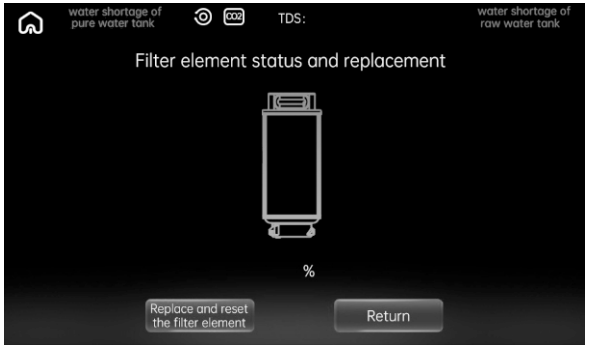

Machine fault: The button of machine status in main screen will turn to red, and will jump to below screen page.

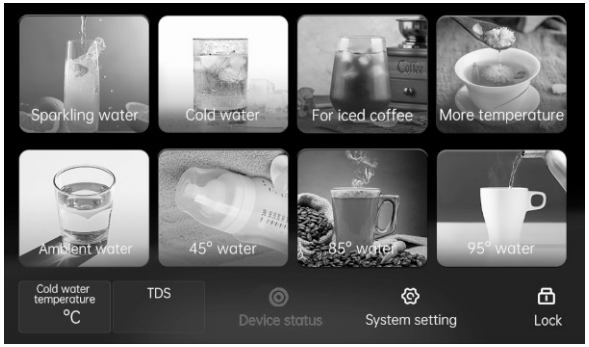

Lock : Press one time to lock, press again to unlock.

WiFi Network setting : Click reset the network by mobile app, the screen page will have instructions if connected successfully. If it is already connected with network, while press reset,WIFI will unbind and go into resetting network status.

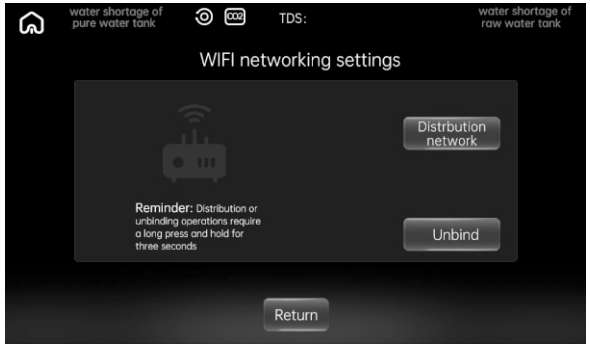

UV sterilization : Press “System setting”, press “UV sterilization”, it could start UV sterilization of the machine or shut down UV sterilization of the machine.

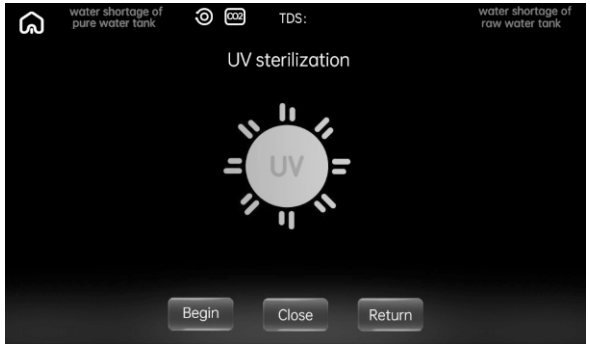

Pipeline mode switching : The default setting is with original water tank mode, if need to switch to pipeline mode, press this button to start, the machine will remember this setting from now on.
Under pipeline mode, it must make sure plug in with input water pipe and wasted water pipe. (Please refer to the water pipe installation drawing for operation.)
Under pipeline mode, turn off the faucet of tap water before start to press drain button.
(Notes: Left and right side water outlets under display panel will drain together.)

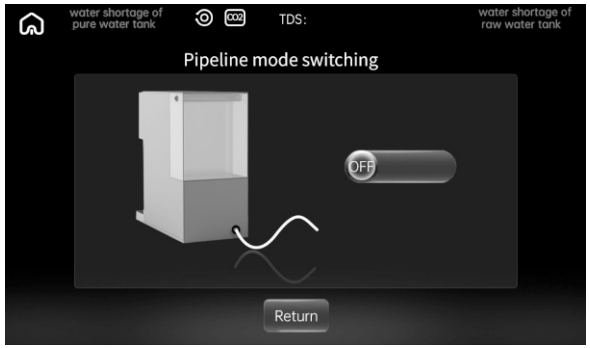

Operated with " Self-cleaning" when first used or after replaced of filter. Press "System setting" in main screen, press function " Self-cleaning" into the automatic cleaning mode.

1. Press "Drain" mode to clean out all the water in tank ; under drain mode, two outlets will flow out water together, please place water containers under the outlets.
2. After finished the drains, press "Start" into "Self-cleaning" mode. After finished the self-cleaning, the two outlets will stop flowing out water.
3. After finished self-cleaning mode, please fill water tank. (Notes : if need self cleaning, please repeat STEP 2)
4. After finished above steps, please place CO_2 tank to designated position to enter normal use status.

Notes: CO_2 tank can not be placed designated position before cleaning. It must be placed in machine after finished cleaning.

Notes:

1. Buzzer will sound "Ding" when the operation is valid for pressing the button each time.
2. The machine will clean 5 seconds when start operation or each time fill with water tank.The water icon will light up in display panel.

Waterway Installation Diagram

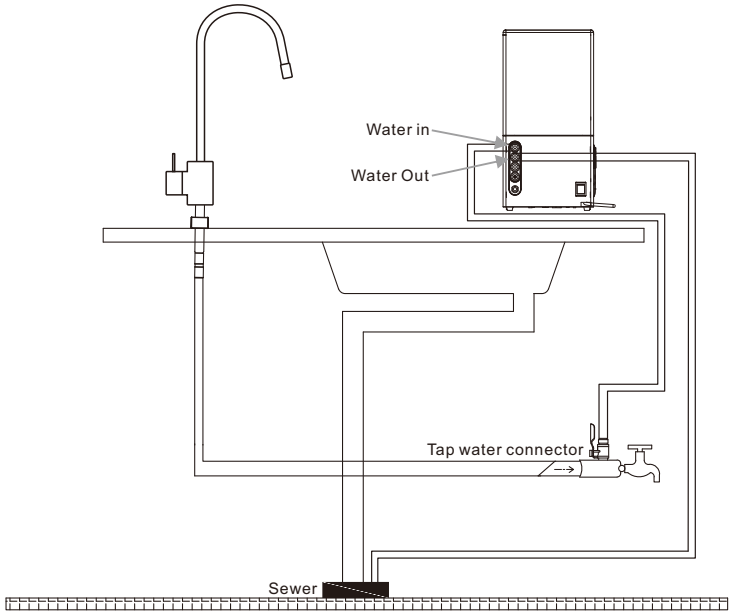

1. After taking the product out of the packing box, place it in a flat place, such as the desktop or cabinet countertop.

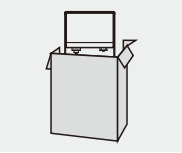

2. Take out the inlet ball valve, install it on the angle valve, connect PE water pipe and install it on the inlet at the rear of the host. (Note: PE pipe should be inserted tightly.

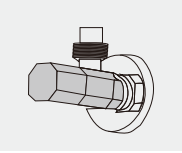

3. Connect the pipeline according to the stage installation schematic diagram (as shown in the right, see the stage waterway installation diagram for big picture)

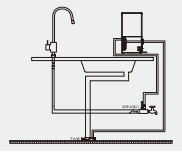

4. Concentrated water can be discharged directly into the sewer or recycled.

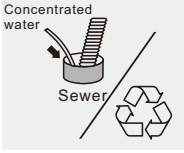

Steps for replacement of bubble tank

When the machine display shows no CO_2, it means that it need to replace the gas tank.

Step 1 Turn off the power supply, open the gas tank cover, hold the notch of the cover by your finger and pull it up to open the tank cover.

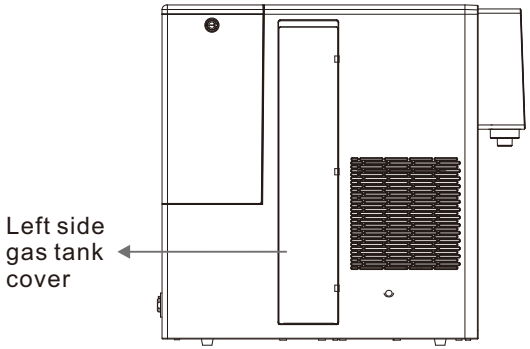

Step 2 When open the cover, hold the bottom of bottle to pull outward, rotate the bottle by counterclockwise.

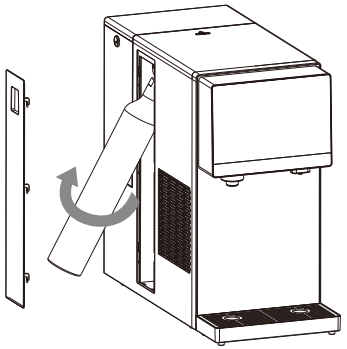

Step 3 Remove the sealing of new gas bottle, place the spout to the machine's connector of relief valve. Connector can be pulled up to align with bottle's spout, rotating the bottle with clockwise and fix. Close the tank cover.

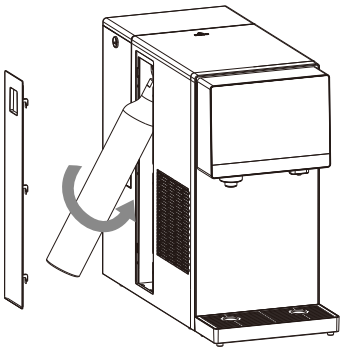

Step 4 After replacement of gas bottle, white writing of CO_2 will be shown in display panel again, means that the gas bottle has been fixed.

Replacement of filter element

Step 1 Turn off the power,open the water tank cover, push backward the top lid of machine.

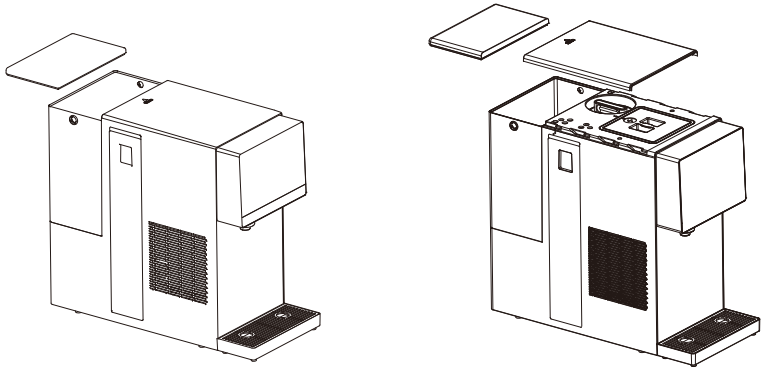

Step 2 Rotate the filter counterclockwise and take it out upward.

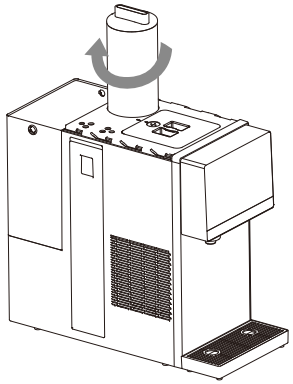

Step 3 Assemble the new filter and rotate it by clockwise to tighten

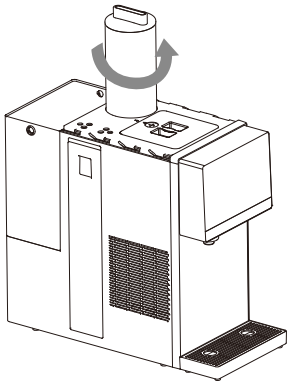

Step 4 Press button of machine status into the replacement of filter, and press reset. After finished filter replacement, it suggests to operate with self-cleaning function to clean the new filter.

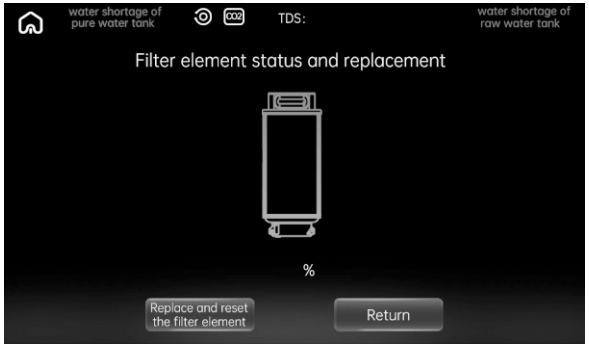

Note:Original filter element must be used for replacement so as to ensure the safety of drinking water. For any abnormal situation during the replacement of filter element, please contact the customer service center in time.

Function of filter element

Filter element for short	Type of filter element	Function	Recommended replacement period
RO	4 in 1 RO Reverse osmosis composite filter element	Removal of impurities such as silt, rust, sand, suspended solid and blood worm; Removal of residual chlorine, germ, heavy metal and absorption of disagreeable tastes and odors; Prevent the growth of germ and improve the tastes.	24 months

Fault elimination

If your machine fails, please refer to the help information in the following table first. If the problem cannot be solved, please contact the local maintenance department.

Fault	Reason
The machine cannot produce water	1. Check whether the raw water tank has water
	2. Check whether the filter element is blocked due to too much dirt
Water flow is smaller	Check whether the filter element is too dirty or used beyond the service life
Water seepage at the screw interface	1. Check whether the parts on the machine has been dismantled without authorization
	2. Check whether the parts at the seepage place are screwed tightly, staggered in teeth or slide
	3. Check whether the silicone seal ring at the seepage place is aged or damaged
Electricity leakage and induced electricity of machine body	The machine is grounded poorly
Machine does not heat	1. Is your dispenser connected to the power supply
	2. The temperature-controlled protector on the heating barrel is not reset.
Machine is not cooling	1.Is the machine connected with the power supply
	2.Is the cooling function turned off
Machine is not carbonating	1.Check the CO_2 icon if change to red or not, to judge if no gas in CO_2 tank
	2.Check the water lack icon to judge if lack of water in carbonating tank
	3.Check the indication of cold water temperature to see if below 10 degree

· If the power cord is damaged, it must be replaced by a professional from the manufacturer, maintenance department or similar department in order to avoid danger. Avoid pinching, folding, knotting or damaging the power cord.

· It must be installed by professionals. Disassembling parts on the product yourself may damage the product or cause electric shock. Moving and handling by yourself may cause improper operation and damage to the machine.

Fault description

After the fault occurs, please remember the code first and turn off the power.

Fault code	Reason	Processing mode
Fault E1	Long time incomplete water production	Please unplug the power plug and power on again
Fault E2	Inlet water temperature NTC open circuit	Please contact after-sales service
Fault E3	Outlet water temperature NTC open circuit	Please contact after-sales service
Fault E4	The inlet water temperature is too low	Using water above 3℃
Fault E5	Hardware circuit board fault detected	Please contact after-sales service
Fault E6	Machine water leakage fault	After drying the leakage detection board, restart it.

List of harmful substances

To meet the laws, regulations and other requirements related to the limitation on harmful substances electronic and electrical products, our company makes the following statement after internal detailed checking according to the category of parts.

Name of electric appliance: Reverse osmosis purification machine						
Part name	Harmful substances					
	Lead (Pb)	Mercury (Hg)	Cadmium (Cd)	Hexavalent chromium (Cr(VI))	Polybrominated biphenyls (PBB)	Polybrominated biphenyl (PBDE)
Filter element	○	○	○	○	○	○
Solenoid valve	○	○	○	○	○	○
Self-priming pump	○	○	○	○	○	○
Water suction pump	○	○	○	○	○	○
Silicone and rubber sealing parts	○	○	○	○	○	○
Components of computer board	X	○	X	○	○	○
Other metal structural parts	X	○	○	X	○	○
Power adapter	X	○	○	○	○	○
Plastic parts	○	○	○	○	○	○
Wires	○	○	○	○	○	○
Water storage tank	○	○	○	○	○	○
Power line	X	○	○	○	○	○
Package printing parts	○	○	○	○	○	○

This form is prepared according to the provisions in SJ/T 11364. Some models may not include the parts in the form. The electric control board component includes elements, PCB, wiring terminals, etc.

Note:
○: indicates that the content of hazardous substance in all homogeneous materials of the part meets the limitation requirement of GB/T 26572.
X: indicates that the content of hazardous substance in some homogeneous materials of the part exceeds the limitation requirement of GB/T 26572.
The harmful substances of the part with "X" cannot be replaced due to the limited technological development level in the industry.