User's manual of tecbot robot vaccum

Please read this manual carefully before using the product and keep it properly

Thanks for choosing our product

The product is a cleaning robot integrated with sweeping, vaccum and mopping. With laser real-time construction of cleaning map and self planning of sweeping path, it can complete a full coverage cleaning.The machine has a variety of perception functions and super obstacle ability, easily adapt to the complex home environment.With an implementation of regular, efficient cleaning work, the product can be carried out at the same time for sweeping and mopping, also you can choose sweeping or mopping function separately.It has super suction force of more than 4000Pa. The bionic wet mopping system can realize self-cleaning of the roller by using the function of strong water spray and water squeezing. With a timely recover of the sewage, the roller can be reused without dismantling and cleaningIt can recharge automatically

Practical technology makes you get rid of trivial housework and enjoy life. Wish you a happy life with our product.

Product introduction

Device

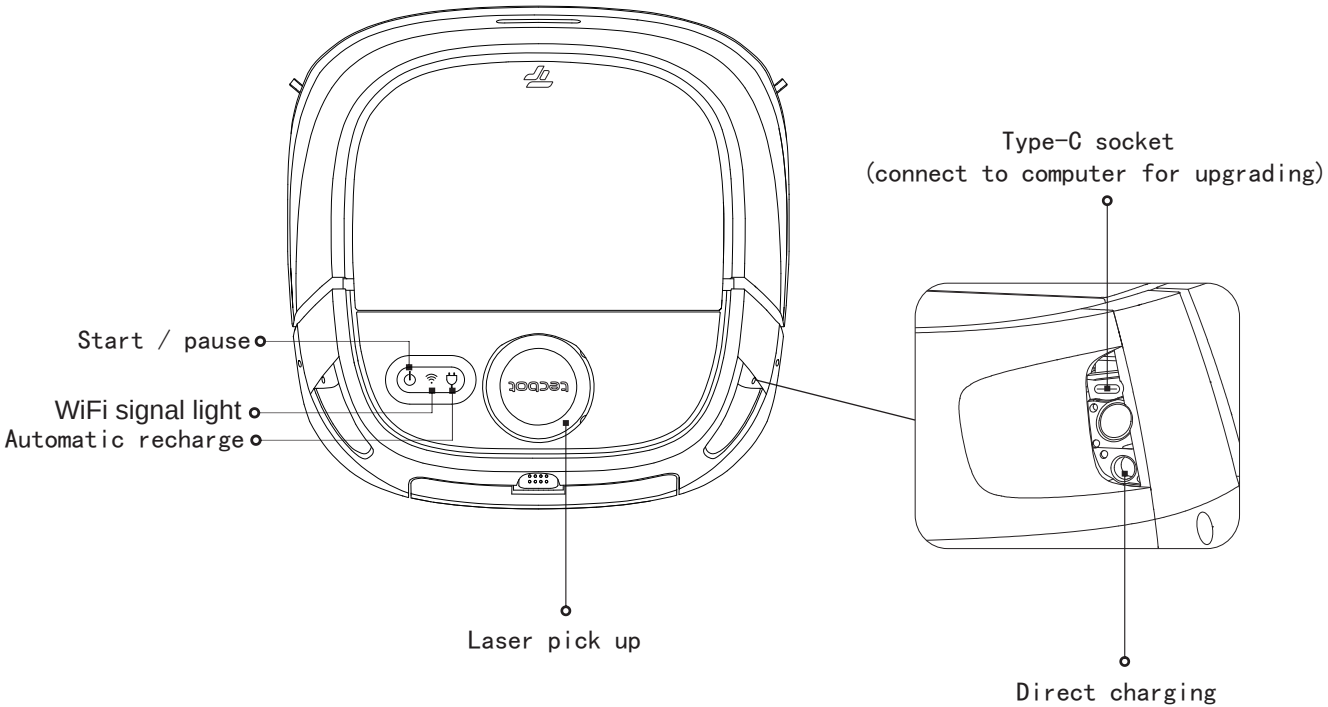

Product introduction

Accessories list

Mopping roller

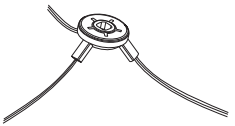

Side brush *2

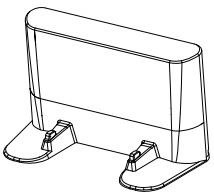

Recharging station

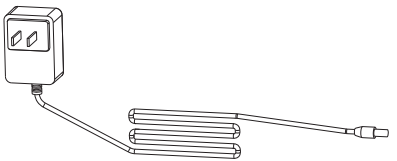

Power adapter (optional)

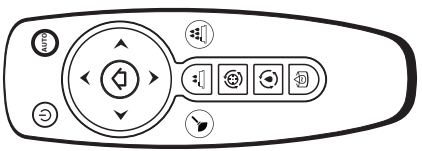

Remote control

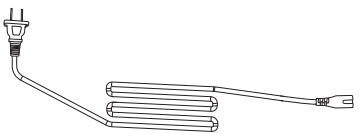

Power adapter (optional)

Product introduction

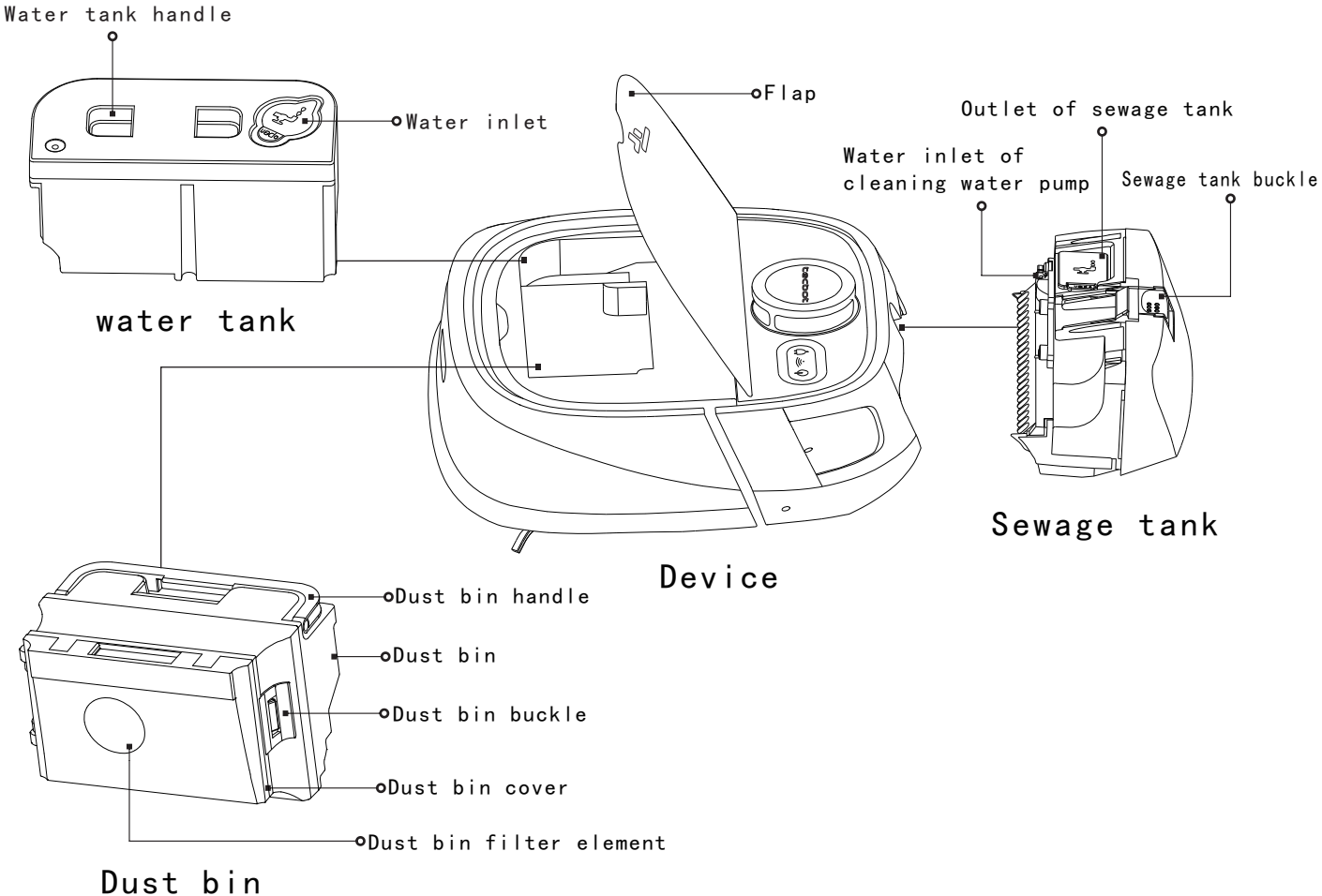

Product introduction

Device and sensor

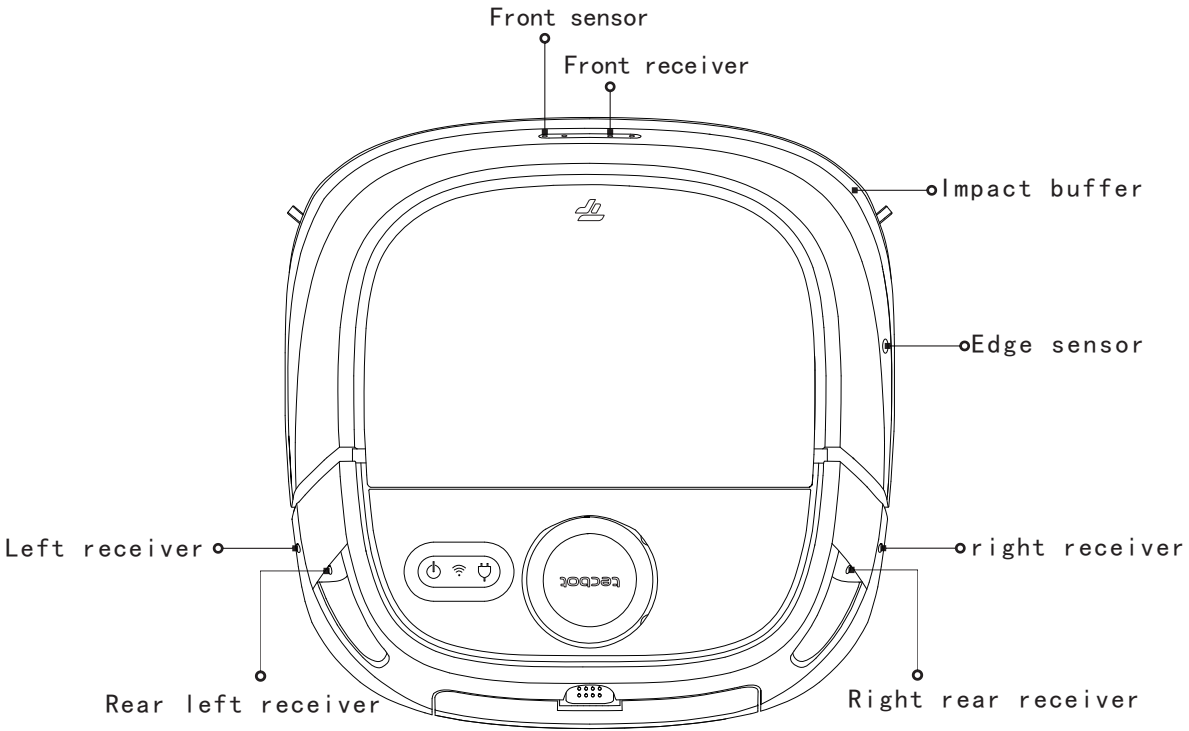

Product introduction

Device and sensor

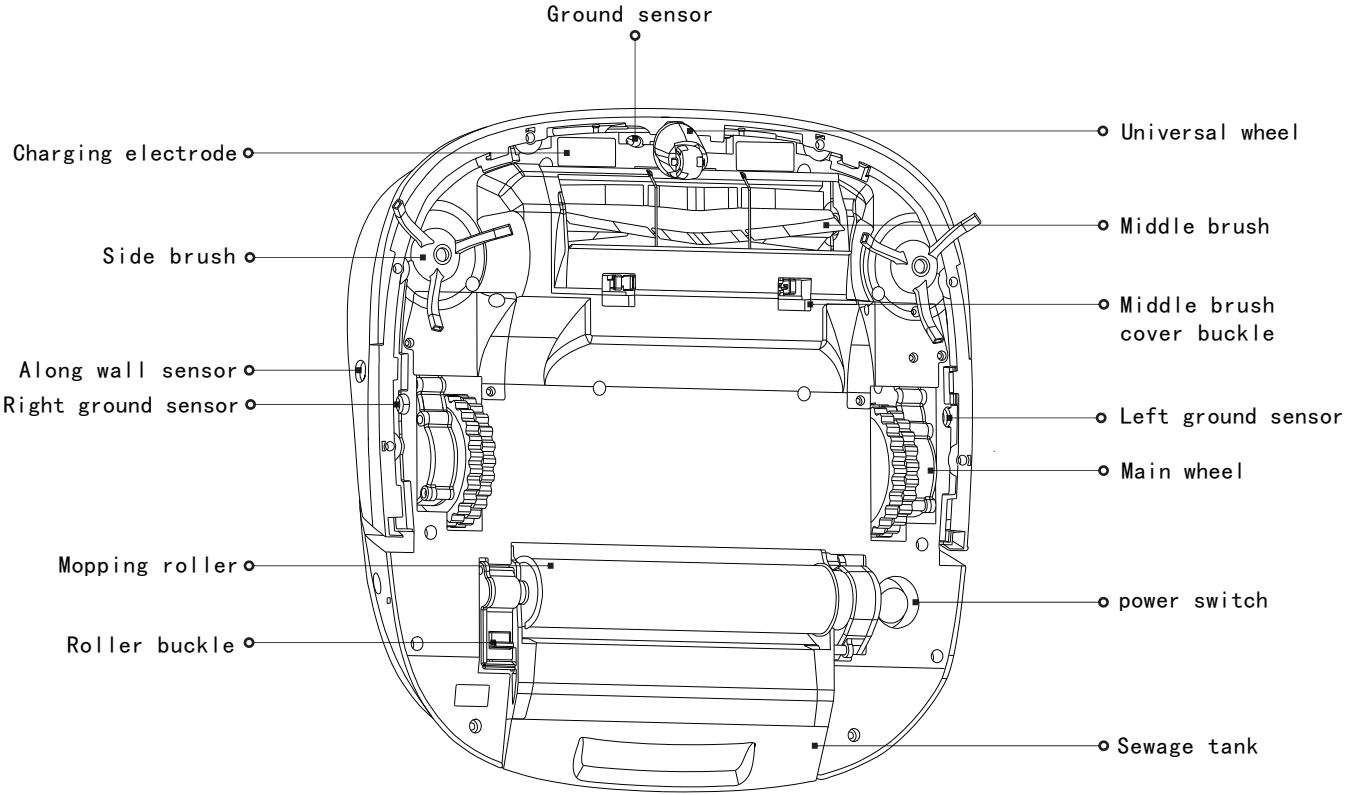

Product introduction

Recharging station

Front

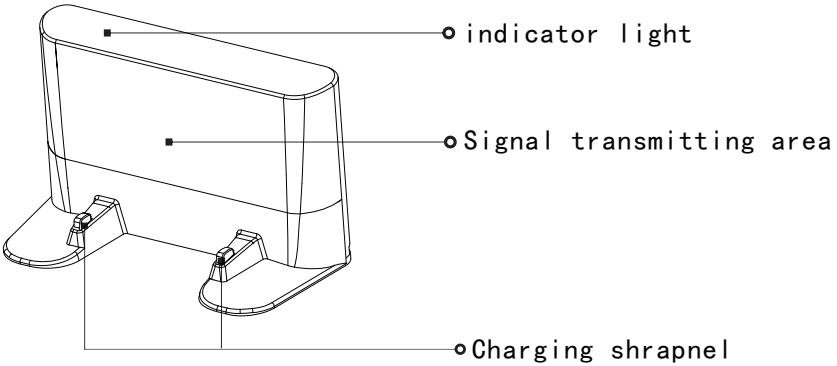

Back

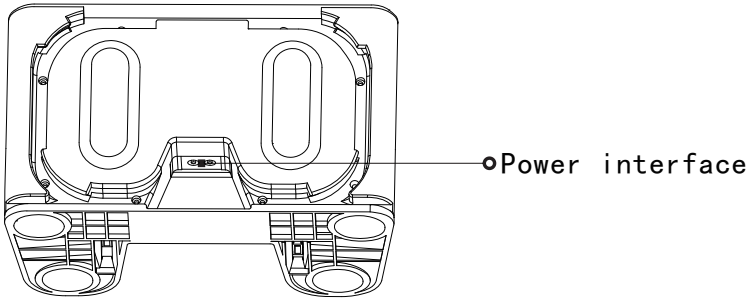

Product introduction

Remote control

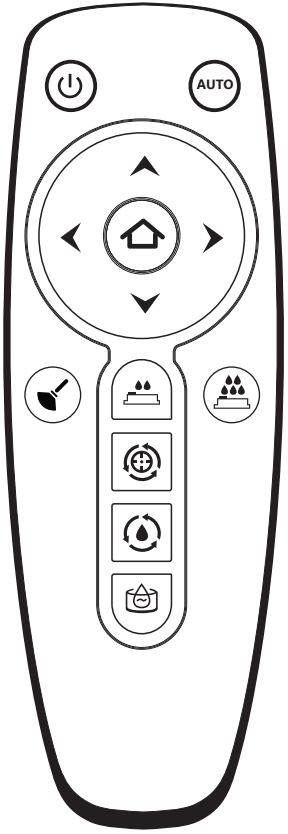

	Standby: press the button, the device is in standby mode
AUTO	Automatic: press this button, the device starts sweeping and mopping
	Automatic recharging: press this button, the device will start to search for the recharging station automatically
	Forward: press and release this button, the device will move forward and stop when encountering obstacles
	Backward: press this button, the device goes backward, release the button, the device stops
	Right: press this button to turn the device to the right until it is released, then it goes straight and stops when encountering obstacles
	Left: press this button to turn the device to the left until it is released, then it goes straight and stops when encountering obstacles
	sweep: press this button to start the function of sweeping
	Fixed point sweep: press this button to start local cleaning in the selected area
	Wet mopping: press this button, the device starts to mop the floor
	powerful wet mopping: press this button, the device starts powerful wet mopping function
	Fixed point wet mopping: press this button, the device starts to do local wet mopping in the selected area
	Wash mop: press this button, the device stops working and starts cleaning roller mop

Product operations/ cautions

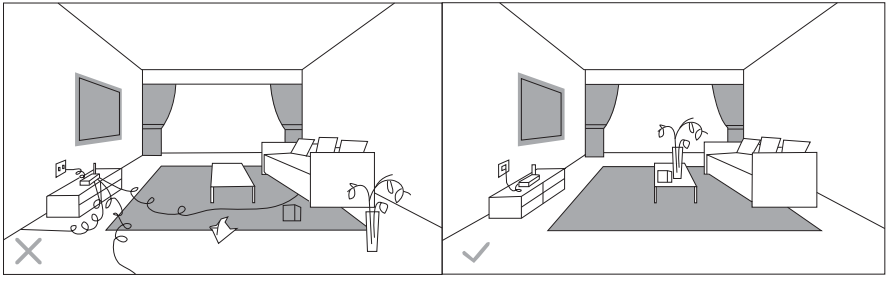

Please clean the wire and sundries scattered on the ground. And remove the articles that are easy to fall, fragile, valuable and etc away before starting.To avoid being entangled, stuck, dragged or knocked down by the device, and causing personal or property damage.

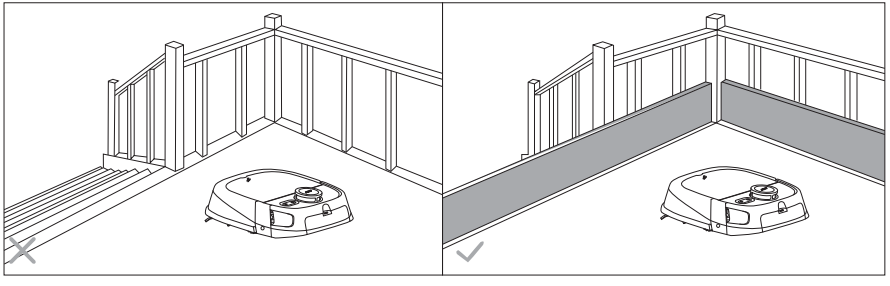

If you use this product in a suspended environment, be sure to use a solid physical barrier to prevent the divice from causing personal or property damage due to accidental fall.

App Download

1. Scan the QR code below to download the "tecbot" application.

TECBOT

2. Download "tecbot" Application in Apple IOS application market or domestic Baidu, Huawei and other Android application markets or in browser.

App download and network control

In order to use the full functions of the robot, we recommend to use app to control it.
Before starting, please confirm:

- Your mobilephone or tablet is connected to the Wi-Fi network.
- The system of your mobilephone or tablet is IOS 8.0 (or above) or Android 4.4 (or above)
- The router supports 2.4GHz wireless signal.
- The WiFi signal is flashing.
- Scan the QR code to download the latest version of app or search for "tecbot" in the app store.

App Downloads options

Android

Download on the App Store

To add the device and set the connection and WiFi on APP

Step 1: regist account number

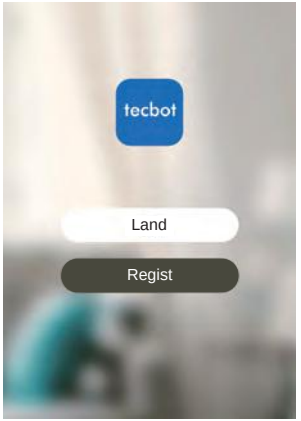

Step 2: click to Add device

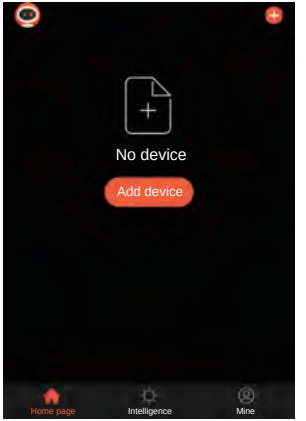

Step 3: connect power

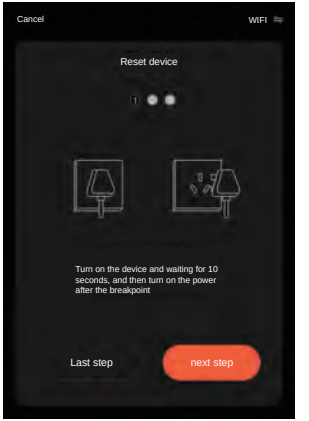

Step 4: start the robot, press the home button for 3-5 seconds, and the WiFi signal light starts to flash.

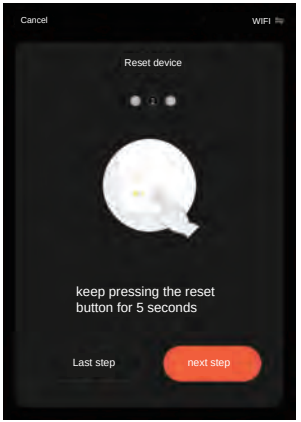

Step 5: make sure the indicator light is flashing

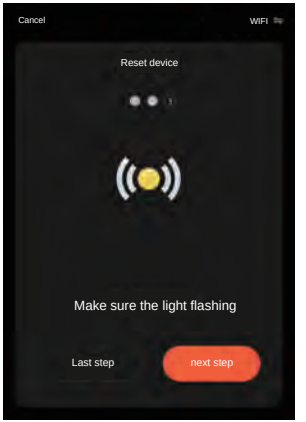

Step 6: if the connection is successful, the WiFi signal light will stop flashing.

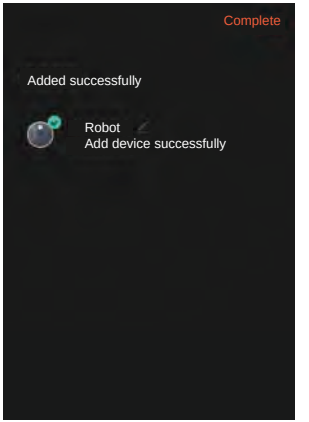

installation

1. After taking the unit out of the packaging box, please remove the protective foam on both sides of the host.

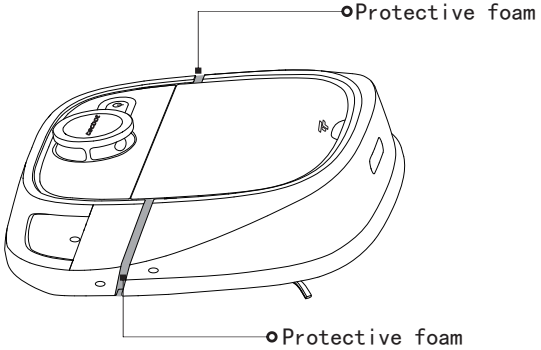

2. Please check the installation of the sewage tank, middle brush and dust bin is loose or not. If so, please reinstall

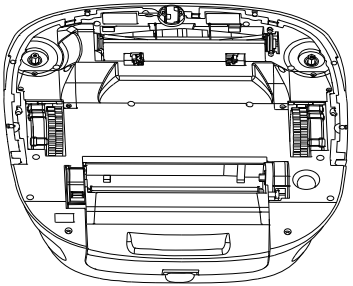

3. Install the side brush. Protective foam

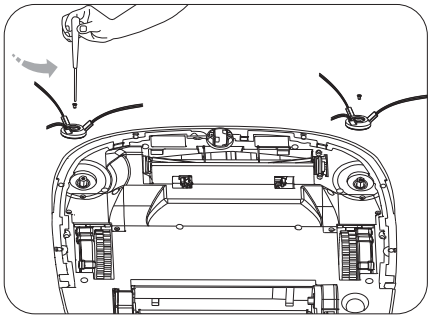

4. Install the mopping roller.

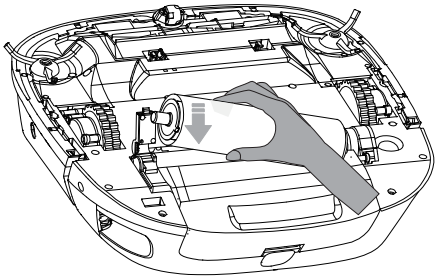

install

Recharging station

Place the recharging station on the horizontal ground close to the wall and connect the power supply.

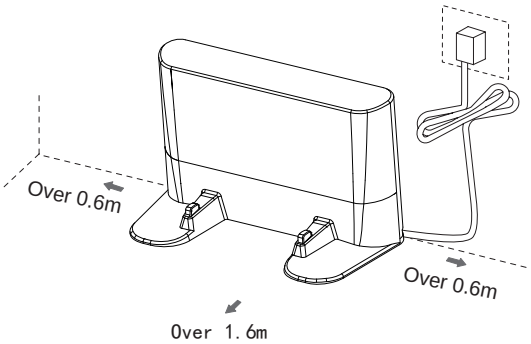

Note: (1) Please ensure that there is over 0.6m space on both sides of the recharge station and over 1.6m space in front of it
(2) The power cord should be perpendicular to the ground to prevent it from being dragged by the device, to avoid the recharge station to move or power off.

Device charging

When the power of the device is less than 15%, it will automatically find the recharge station to charge. You can also directly press the remote control recharge button to start the automatic recharge function. During the charging process, the mopping roller will automatically lift to keep the ground clean.

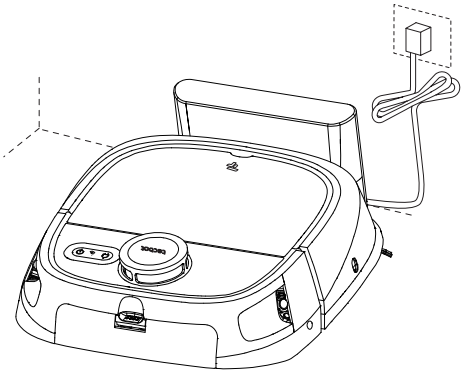

Note: when the power is not enough, you can't start the machine. Please put the device on the recharge station manually. The indicator light on the recharge station flashes, indicating that the charging has started. It takes about five hours for the battery to be fully charged.

instructions

Water tank filling

Open the flap to take out the water tank and open the rubber plug and put the water into the tank, then plug the rubber plug tightly when the tank is full. Put it back to the device, and close the flap.

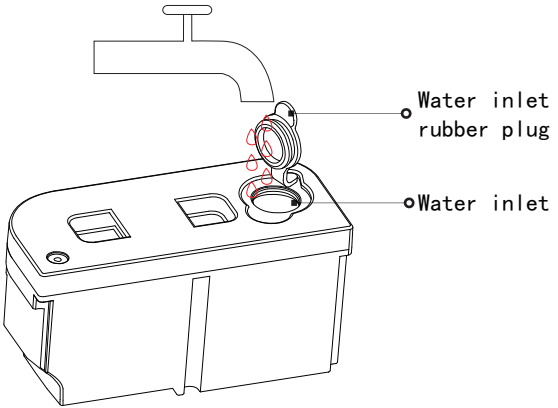

Battery

The device uses a high-performance lithium-ion rechargeable battery pack. In order to maintain the battery performance, please keep the device charged for daily use.

Note: if not used for more than 24 hours, please turn off the power switch of the device.

Power on / off

The power switch is on the right side of the bottom. (as shown in the figure above)
Press "1" for power on, press "0" for power off. After power on, the device needs about 10 seconds for self checking. After self checking, the device starts normally.

(1) Please check whether the water tank needs to be added water or the sewage tank needs to be dumped before starting the device.
(2) One of the five working modes, which are automatic, sweeping, wet mopping, fixed point sweeping, and fixed point wet mopping, can be selected as the current working mode.

Note: this device has the function of setting up map and planning path, which can automatically return the charging station.

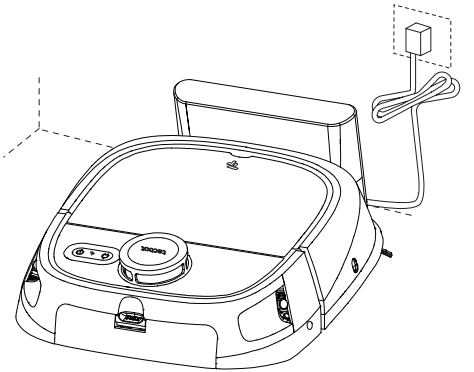

instructions

Cleaning path

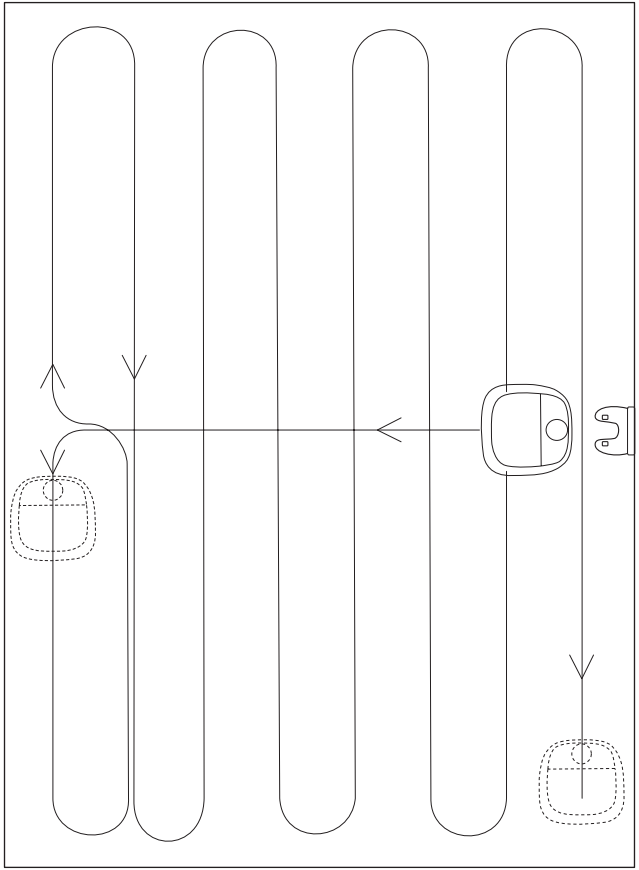

1. After starting, you can choose one of the five cleaning modes (automatic, sweeping, wet mopping, fixed point sweeping, and fixed point wet mopping). After pressing the function button, the device will start to go straight and select the right side to do edge cleaning, when it meets a wall or a large obstacle. And it will do S path cleaning, when it meets a wall or a large obstacle on the other side. During the working time, it will intelligently avoid the obstacles and automatically plan the path to clean the remaining space.

2. If the automatic or wet mopping function is selected, the device will automatically clean the mopping roller every 10 minutes.

instructions

Cleaning method

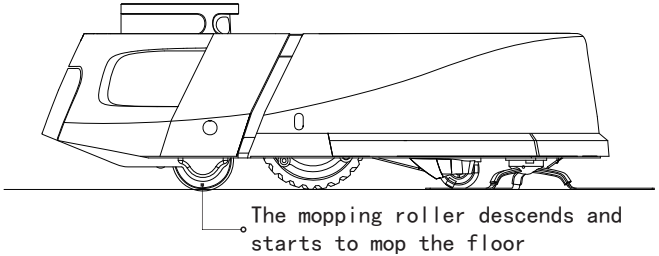

1.If the automatic function is selected, the device will automatically start the "sweeping, suction and mopping" functions. The device will automatically clean one side of the environment, and then clean the other side.

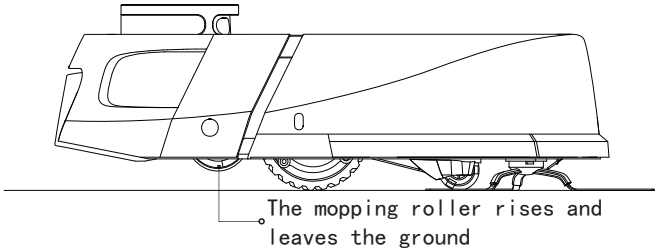

2. sweeping: after selecting the "sweeping" function, the device will automatically turn on the function of suction and sweeping, and the mopping roller will rise up. The device will automatically clean one side of the environment, and then clean the other side.

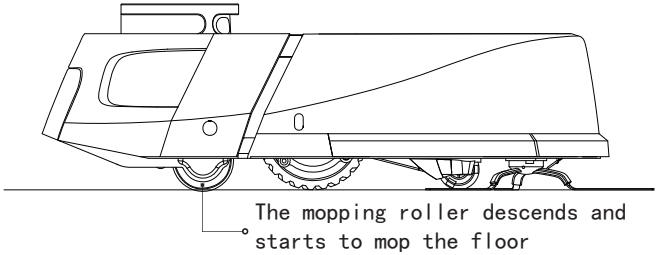

3. wet mopping: after selecting the "wet mopping" function, the device will automatically turn on the function of mopping the ground. The side brush, middle brush, fan and so on all stop working, and the mopping roller starts to mop the ground when it drops.

Note: If the automatic or wet mopping function is selected, the device will automatically spray water, clean the mopping roller, and recycle the sewage. When the sewage tank is full, please clean the sewage tank in time.

instructions

Cleaning method

4. Fixed point sweeping
Press the standby button of the remote control, select the required direction button, control the device to the required cleaning area, then press the fixed-point sweeping key, the device starts to clean in the area of 1.5m x 1.5m, After cleaning, the device will return to the original location.

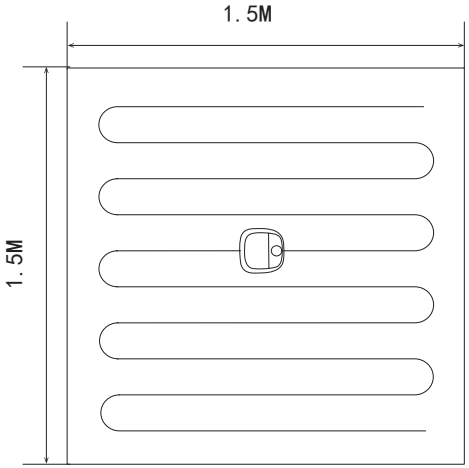

5. Fixed point wet mopping
Press the standby button of the remote control, select the required direction button, and the control the device to the area to be cleaned, then press the fixed point wet mopping button. The device starts wet mopping in the 1.5m x1.5m area. After mopping, the device will return to the original location.

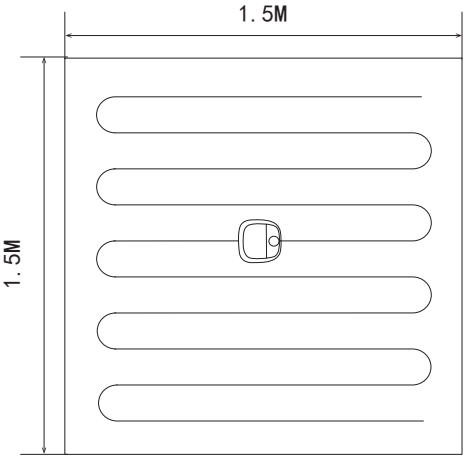

Routine maintenance

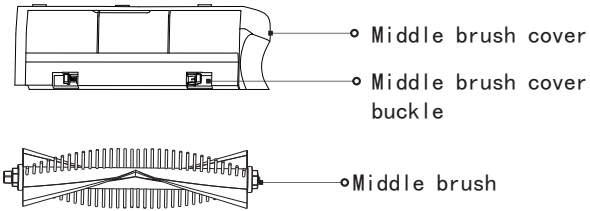

Turn over the machine, push the clips on both sides to the middle, take down the middle brush cover, and then take out the middle brush.

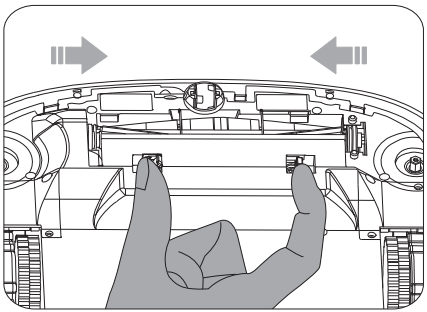

Middle brush

*Cleaning is recommended at least once a week

Use the matching cleaning brush to clean the entanglement on the middle brush. After cleaning, replace the brush and press the buckle of the cover.

Brush cleaning tool used in cleaning method

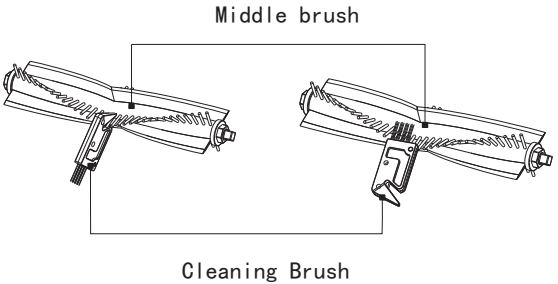

Routine maintenance

Side brush

*It is recommended to clean up once a month

1. Turn over the device and remove the screw of side brush.
2. Remove and clean the side brush
3. Fasten the screw.

Note: it is recommended to replace the side brush about half a year

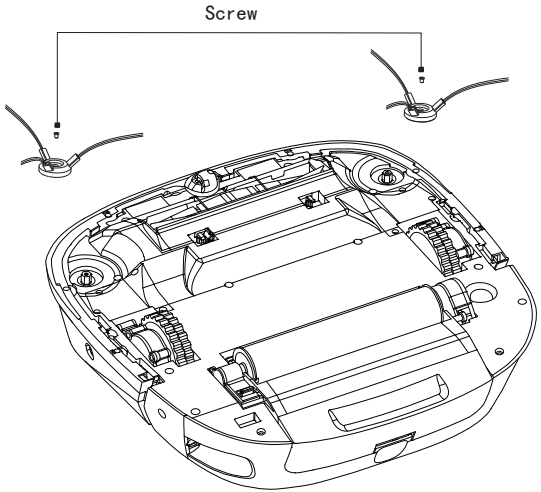

Ground inspection window

*It is recommended to clean up once a month

Turn over the device, wipe and clean the inspection window with cotton swab, and keep the inspection window clean.

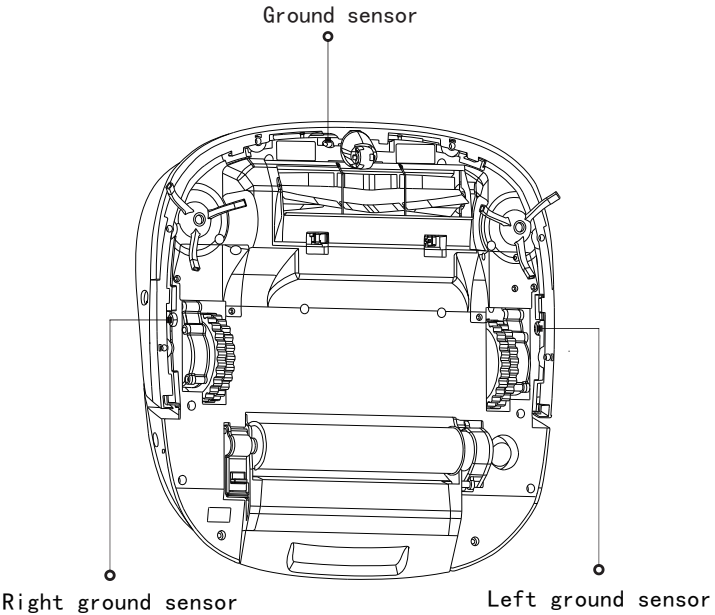

Routine maintenance

Universal wheel

*It is recommended to clean at least once a week

Clean the hair and dirt on the wheel body or axle

Recharge station

*It is recommended to clean the recharge station once a month

Use a soft cloth to wipe the charging spring and lens on the charging base

Host sensor

*It is recommended to clean up once a month

Use a soft cloth to clean all sensors of the host, including the charging electrode

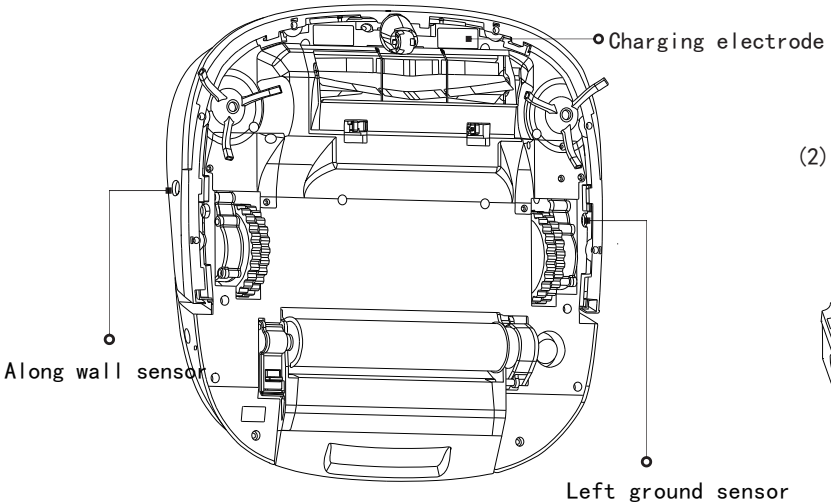

Dust bin

*It is recommended to clean at least once a week

(1) Open the flip, turn the handle 90 ° and take out the dust bin upward.

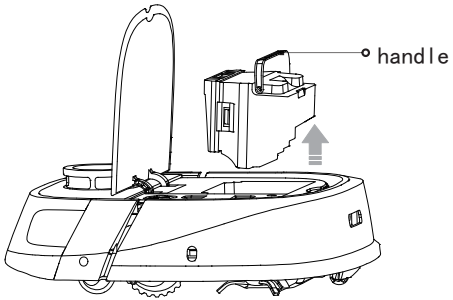

(2) Open the dust bin cover from the buckle and pour the garbage down.

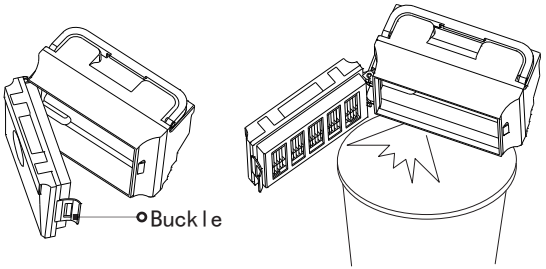

Routine maintenance

Cleaning dust bin assembly

*It is recommended to clean up once a month

(1) Pull out the back cover assembly from the dust bin, then take out the HEPA and sponge from the back cover.

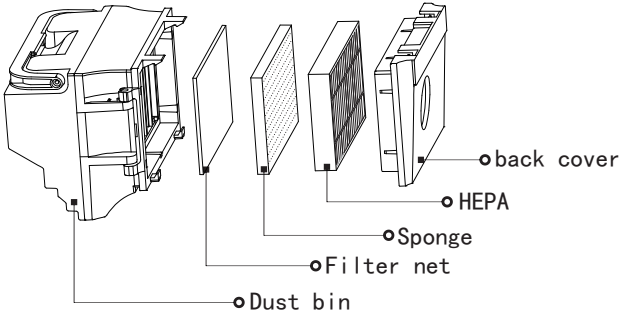

(2) Clean the dust bin, sponge, HEPA and back cover with clean water.

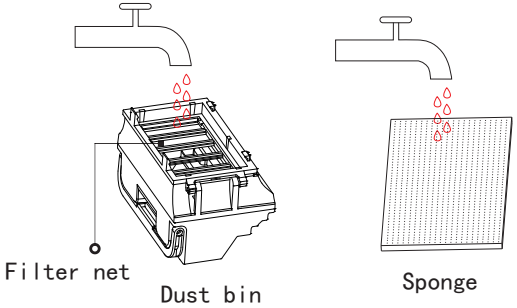

Note: please do not clean the filter net with brush or finger.

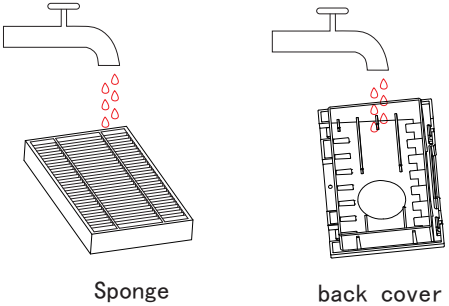

Note: please clean with water, do not add any detergent.

(3) The dust bin, sponge, HEPA and back cover shall be dried thoroughly before reusing.

Note: please do not use it until dry enough (at least 24 hours)

Routine maintenance

Sewage tank

*It is recommended to clean it once per using

(1) Press down the buckle and take out the sewage tank.

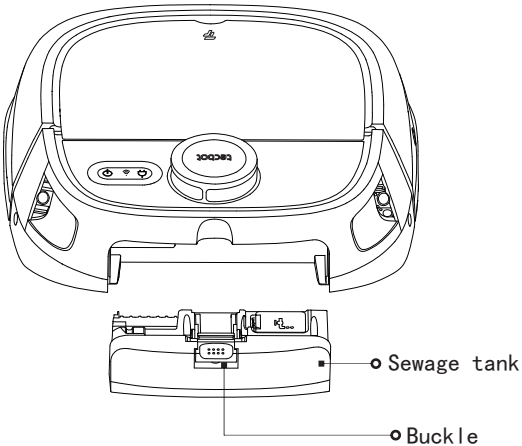

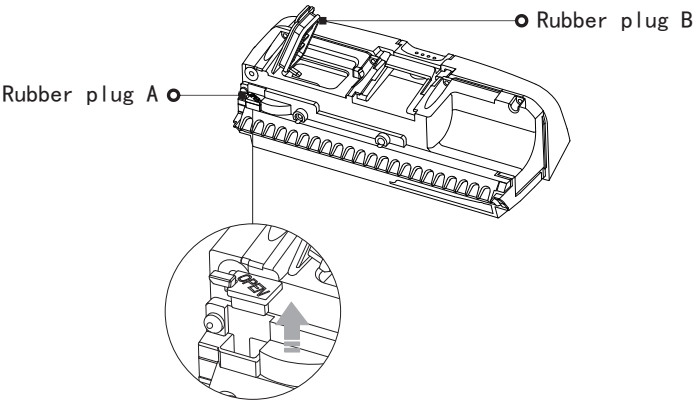

Note: the rubber plug A is a movable rubber plug, which can be taken down gently.

(2) Open the rubber plug and pour out the sewage.

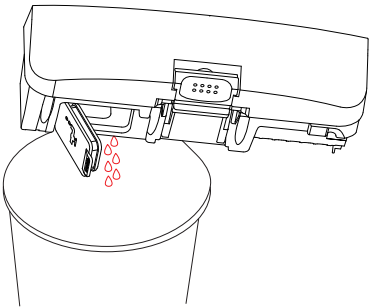

(3) Clean the sewage tank with clean water and clean the dirt with provided brush.

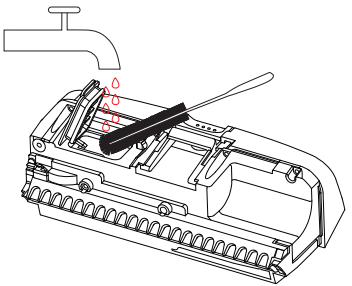

(4) When the sewage tank had been used for many times, please remove the movable rubber plug to clean the water inlet of the water tank.

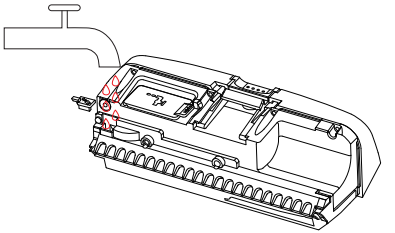

Note: it is recommended to clean once every three months

Note: after the sewage tank is cleaned, please dry the surface with a paper towel and install it back to the device. After hearing the "click" sound, it means that it has been installed in right place.

Routine maintenance

Mopping roller

(1) Take out the sewage tank first

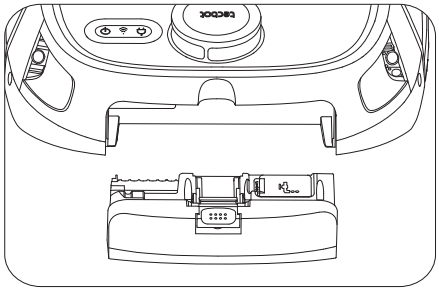

(2) Turn over the device, gently push upward to open the buckle and take out the roller.

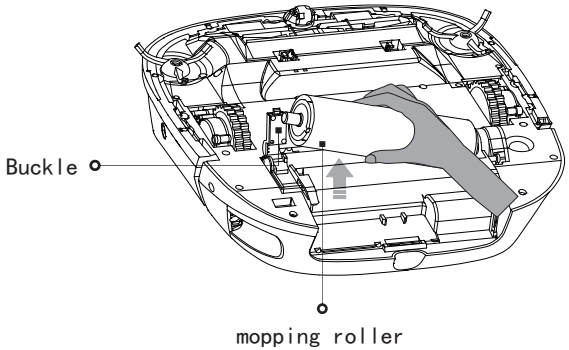

(3) Please clean the roller with clean water.

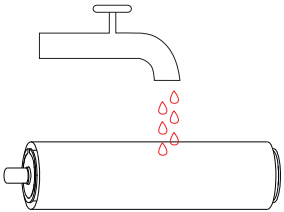

(4) Dry or wring by hand.

Note: it is recommended to replace the roller in about 6 months

Basic parameters

Device

name	Parameters
Overall dimension	350x350x108mm
product weight	about4. 5kg
Suction power	4000Pa
Battery	14.4V/5200mAh
Noise	<65dB
Working time	120-150 minutes
Dust bin capacity	500ml
Clean water tank capacity	400ml
Sewage tank capacity	300ml
Obstacle height	15mm
Rated power	36W

recharge station

name	Parameters
Overall dimension	216x107x132mm
Rated input	100-240V 1A
Rated output	19V 1A

Name and content of harmful substances in products

Part name	Harmful substances					
	lead (Pb)	mercury (Hg)	chromium (Cd)	Hexavalent chromium (Cr(VI))	polybrominated biphenyls (PBB)	polybrominated diphenyl ethers (PBDE)
Circuit board	×	○	○	○	○	○
Metal parts	×	○	○	○	○	○
cabinet	○	○	○	○	○	○
Battery	○	○	○	○	○	○
Other parts	○	○	○	○	○	○

This table is compiled according to SJ / t11364

○ It indicates that the content of the hazardous substance in all homogeneous materials of the component is below the limit specified in SJ / t11364.

× It indicates that the content of the hazardous substance in at least one homogeneous material of the component exceeds the limit specified in SJ / t11364.

common problem

problem	resolvent
Unable to power on	The battery is low. Please charge it by the charging station before using it. The ambient temperature can not be too low (below 0 ° C) or too high (above 50 ° C), please use it at 0-40 ° C.
Unable to charge	If the charging base is not powered on, please make sure that both ends of the power line of the charging base are plugged in; if the contact is poor, please clean the spring piece of the charging base and the charging contact piece of the host; please make sure that the charging indicator light is on.

common problem

problem	resolvent
Unable to recharge	There are too many obstacles near the charging base. Please put the charging station in an clear area;The device is too far away from the recharge station, please put the device near the recharge station to try;Please confirm whether the recharging station remains powered on;Please clean the sensor of recharge station in time.
Abnormal noise during cleaning	The middle brush, side brush or left and right wheel may be entangled. Please stop the machine and clean it.
The cleaning capacity is reduced or dust fall occurs	If the dust bin is full, please clean the dust bin; if the filter net is jammed, please clean the filter. If the middle brush is wrapped, please clean the middle brush.
The performance of mopping is not good enough	Check the water tank, please add water to the tank in time.
Appointment cleaning does not work	If the remain power is less than 20%, the device will not start as appointment.
Charging on the charging station all the time will consume electricity or not	The device, which keep charging on the recharging station, will have low electrode consumption, and keep the battery in the best performance.
Does the first three times using require 16 hours of charging	The lithium battery has no memory record when it is used or charged. Full is enough. It doesn't need to wait for 16 hours charging.
After starting the automatic function, the device automatically switches to sweep only.	Wipe the surface of sewage tank with paper towel and install it well, then restart the automatic function.
Unable to return to recharge station after partial cleaning or moving position	After partial cleaning or long-distance moving, the sweeper will regenerate the map. If the charging station is too far away, it may not be able to recharge automatically, please manually put the device back to the charging station to recharge.

common problem

problem	resolvent
Abnormal behavior	restart after Power off
During cleaning, the device will fall off step	Please clean the ground sensor
Unable to avoid obstacles	Please clean the along wall and the front sensors

security information

Battery and charging

1. Please do not use any third-party batteries, chargers or recharging station.
2. Please do not disassemble, repair or refit the battery and recharging station without permission.
3.Please do not place the recharging station close to a hot source (such as heater).
4. Plaese do not wipe and clean the cartridge of the recharging station with wet cloth or wet hands.
5. Please send the expired battery to professional recycling agency for treatment.
6. If the power cord is broken, please stop using it and contact customer service at once.
7. If you need to transport the product, please make sure that the device is power off. It is recommended to use the original packaging box.
8. If you will not use this product for a long time, please power off the device after full charged. And place it in a cool and dry place. Please charge it at least once every 3 months to avoid damage the battery.

security information

Restrictions on use

1. This product is only used for infloor cleaning at home, but not for outdoor (such as open balcony), non floor (such as sofa, bed), commercial or industrial environment.
2. Please do not use in the hanging environment (such as duplex floor, open balcony, top of furniture) without protective fence.
3. Please do not use it in the environment of higher than 40 ° C, or lower than 0° C or any sticky ground.
4. Please hang up the ground cable at home to avoid dragging the cable when the device is running.
5. Please put away the fragile articles and sundries (such as flower bottles, plastic bags, etc.) to avoid any damage when the device is running.
6. Please do not let people with physical, mental or sensory impairment (including children) use this product.
7. Please do not let children use the device as a toy. When working, please monitor children and pets to keep them away as far as possible.
8. Please do not place the cleaning brush in the area that children can reach.
9. Please do not place any objects (including children and pets) on the top of a running device.
10. Please do not let the hair, fingers and other parts of human body or pet close to the suction port of the device when it is working.
11. Please do not use it to clean any burning objects (such as a burning cigarette ends).
12. Please do not use it to clean long wool carpet (some dark carpet may not work as well).
13. Please do not let the device absorb hard or sharp objects (such as decoration waste, glass, nails, etc.)
14. Please do not use the cover of the device or the collision buffer as the handle to carry the machine.
15. Please do not clean the device or the recharging station when power on.
16. Please do not use wet cloth or any liquid to wipe any part of the product.
17. Please do not use the mopping mode on carpet.
18. Please use the product in strict accordance with the instructions. Any loss and injury caused by improper use shall be borne by the user.

Executive Standards: GB4706.1-2005，GB4706.7-2014，GB4343.1-2009，GB17625.1-2012
tecbot robot vaccum
Manufacturer: Shenzhen tanbo intelligent robot Co., Ltd
Address: Rm. 8CDE, Nanyuan Fengye building, 1088 Nanshan Avenue, Dengliang community, Nanshan District, Shenzhen,China
Manufacturer: Guangdong Jingrong Technology Holding Co., Ltd
Address: Jingrong Industrial Park, Shunfeng Road, Sanzhong village, Qingxi Town, Dongguan City, Guangdong Province, China

FCC Warning

This device complies with part 15 of the FCC rules. Operation is subject to the following two conditions: (1) this device may not cause harmful interference, and (2) this device must accept any inte rference received, including interference that may cause undesired operation.

Changes or modifications not expressly approved by the party responsible for compliance could void the user's authority to operate the equipment.

NOTE: This equipment has been tested and found to comply with the limits for a Class B digital device, pursuant to part 15 of the FCC Rules. These limits are designed to provide reasonable protection against harmful interference in a residential installation. This equipment generates uses and can radiate radio frequency energy and, if not installed and used in accordance with the instructions, may cause harmful interference to radio communications. However, there is no guarantee that interference will not occur in a particular installation. If this equipment does cause harmful interferenceto radio or television reception, which can be determined by turning the equipment off and on, the user is encouraged to try to correct the interference by one or more of the following measures:

-Reorient or relocate the receiving antenna.

•Increase the separation between the equipment and receiver.

•Connect the equipment into an outlet on a circuit different from that to which the receiver is connected.

•Consult the dealer or an experienced radio/TV technician for help.

Radiation Exposure Statement

This equipment complies with FCC radiation exposure limits set forth for an uncontrolled environment. This equipment should be installed and operated with minimum distance 20cm between the radiator and your body.