DELTA-SPORT HANDELSKONTOR GMBH
Wragekamp 6 • DE-22397 Hamburg
GERMANY

02/2020
Delta-Sport-Nr.: QC-7590/QC-7591

12.10.2019 / AM 11:22

IAN 331340_1907

PDF ONLINE
www.lidl-service.com

REMOTE-CONTROLLED STUNT DRONE

GB

REMOTE-CONTROLLED STUNT DRONE
Operating instructions

CE

IAN 331340_1907

GB

GB
Before reading, fold out the illustration page and get to know all of the functions of your unit.

GB Operating and safety information Page 10

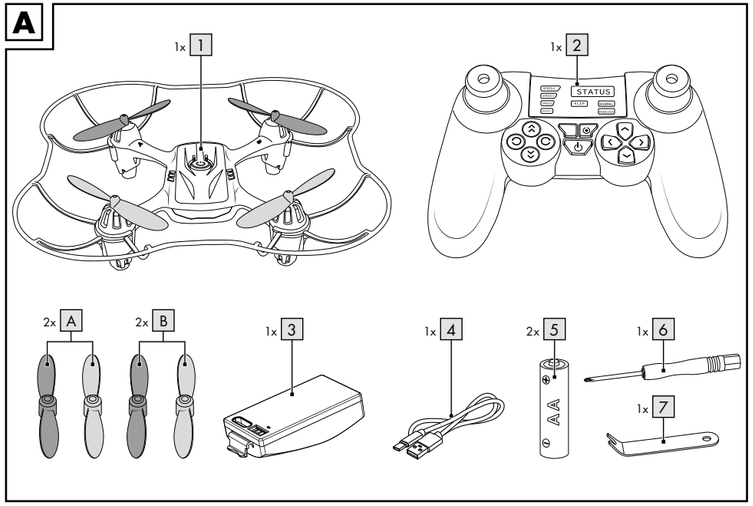
A
1x 1
1x 2
STATUS
2x A
2x B
1x 3
1x 4
2x 5
1x 6
1x 7

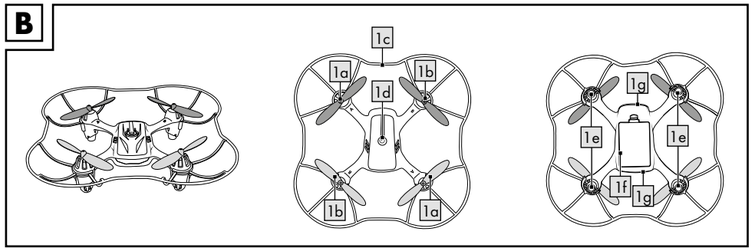
B
1c
1a
1b
1d
1g
1e
1e
1f
1g
1b
1a

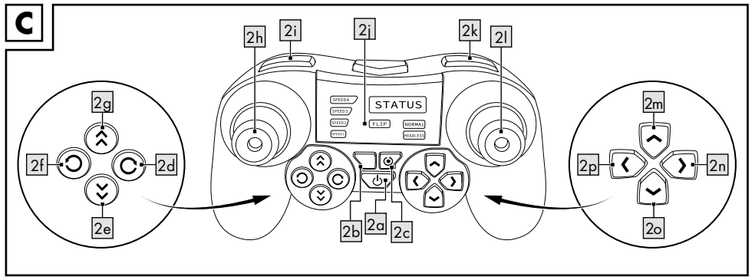
C
2h
2i
2j
2k
2l
STATUS
2g
2f
2d
2e
2m
2p
2n
2o
2b
2a
2c

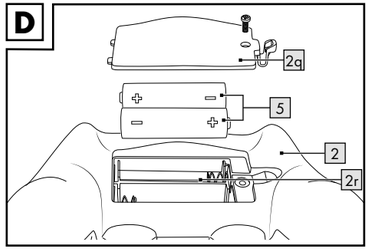
D
2q
5
2
2r

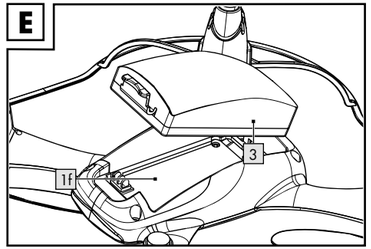
E
3
1f

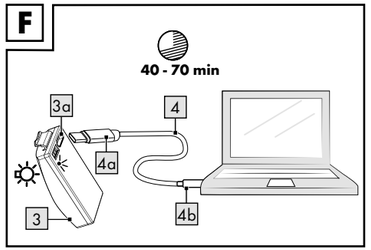
F
40 - 70 min
3a
4
4a
3
4b

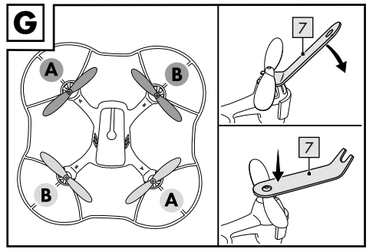
G
A
B
B
A
7
7

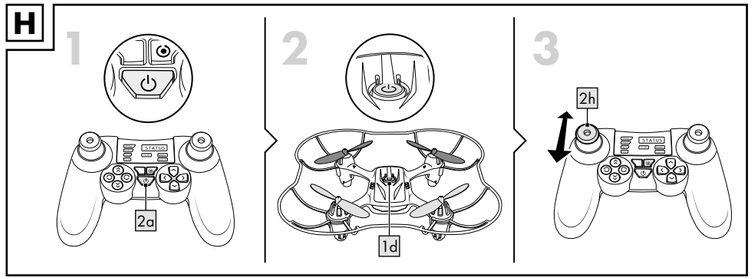
H
1
2
3
STATUS
2a
1d
2h

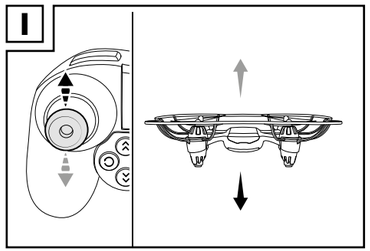
I

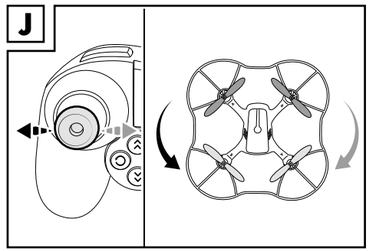
J

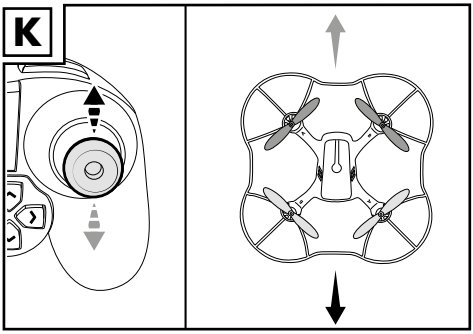
K

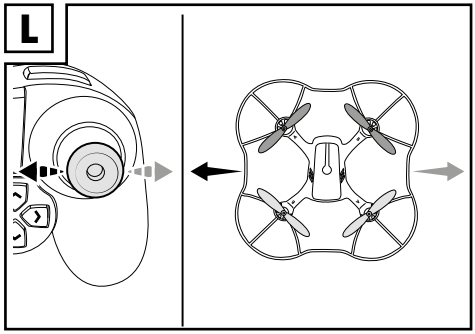
L

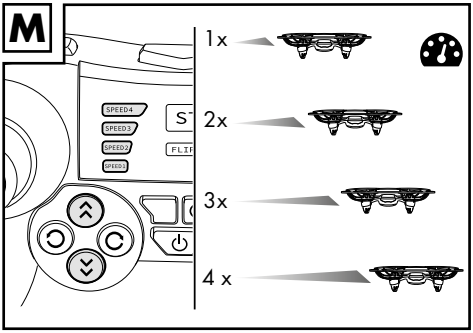
M
1x
2x
3x
4 x
SPEED4
SPEED3
SPEED2
SPEED1

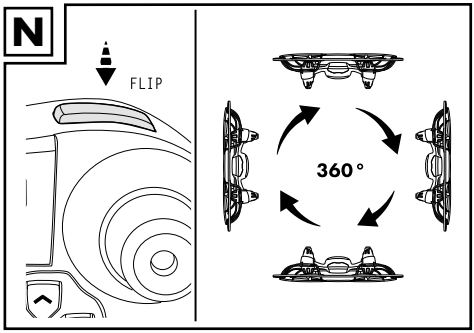
N
FLIP
360 °

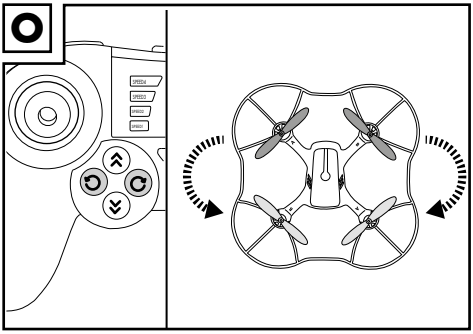
O

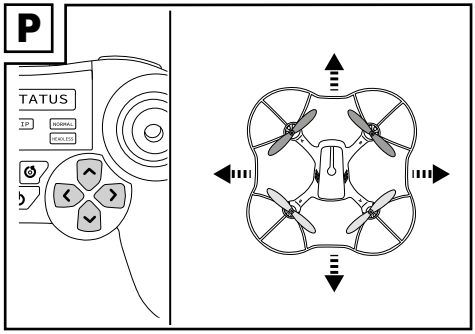
P
TATUS
NORMAL
HEADLESS

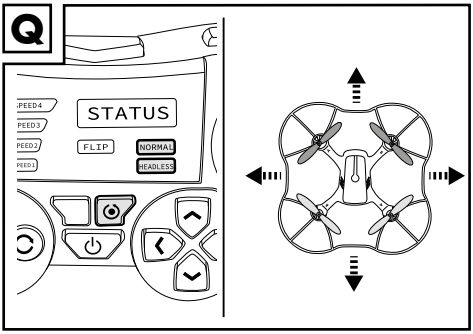
Q
STATUS
FLIP
NORMAL
HEADLESS

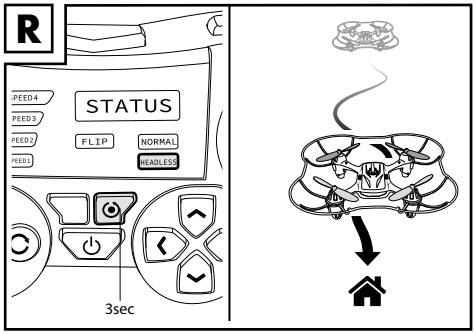
R
STATUS
FLIP
NORMAL
HEADLESS
3sec

GB

Package contents (Fig. A) 10
Quadcopter (Fig. B) 10
Remote control (Fig. C/D) 10
Technical data 10
Intended use ..... 10 – 11
Symbols used 11
Safety information ..... 11 – 14
Battery warning notices! ..... 12 – 14
Foreseeable misuse 14
Inserting the batteries into the remote control
(Fig. D) 14
Inserting the rechargeable battery 14
Removing the rechargeable battery (Fig. E) .. 14
Charging the rechargeable battery 15
Under-voltage warning 15
Suitable flight environment 15
Flight preparation 15
Taking off and controlling
the quadcopter ..... 15 – 17
Taking off (Fig. H) 16
Controlling the quadcopter ..... 16 – 17
Setting the speed (Fig. M) 17
360° rollover (Fig. N) 17
Calibration 17
Ending the flight ..... 17 – 18
Rotor guards 18
Cleaning, repair and storage 18
Replacing the rotor blades (Fig. G) 18
Disposal ..... 18 – 19
Notes on the guarantee and
service handling 19
Possible defects 20

Congratulations!
You have chosen to purchase a high-quality product. Familiarise yourself with the product before using it for the first time.

Read the following operating instructions carefully.

Use the product only as described and only for the given areas of application. Store these operating instructions carefully. When passing the product on to third parties, please also hand over all accompanying documents.

Package contents (Fig. A)

1 x quadcopter (1)
1 x remote control (2)
2 x replacement rotor (A)
2 x replacement rotor (B)
1 x rechargeable battery (3)
1 x USB charging cable (4)
2 x battery (1.5V ⎓ LR6, AA) (5)
1 x Phillips screwdriver (6)
1 x tool (7)
1 x operating instructions

Quadcopter (Fig. B)

- rotor blade A (1a)
- rotor blade B (1b)
- rotor guards (1c)
- on/off switch (1d)
- quadcopter feet (1e)
- rechargeable battery compartment (1f)
- indicator lights (1g)

Remote control (Fig. C/D)

- on/off switch (2a)
- no function (2b)
- headless mode/automatic return (2c)
- rotation (fine tuning clockwise rotation) (2d)
- switch for reducing speed (2e)
- rotation (fine tuning anti-clockwise rotation) (2f)
- switch for increasing speed (2g)
- throttle (control for up/down/right turn/left turn) (2h)
- take-off/landing (2i)
- display (2j)
- 'FLIP' – 360° rollover (2k)
- control lever (forwards/backwards/sideways left/sideways right) (2l)
- direction (fine tuning forwards/right/backwards/left) (2m–2p)
- battery compartment cover (2q)
- battery compartment (2r)

Technical data

Power supply for controller (battery):
2 x 1.5V ⎓ LR6, AA

Power supply for drive (rechargeable battery):
3.7V ⎓ Li-Polymer 300mAh

Range: approx. 30m
Flight time: approx. 5–7 min
Maximum transmission capacity: 6.82dBm

USB charging cable: Type C
Input: 5V ⎓ 1A
Do not use power supply units with an output current of > 1A
Radio frequency: 2.4GHz
Operating temperature range: 10°C to 45°C
Optimum storage temperature: 10°C to 25°C

= protection class II

This product may only be connected to protection class II devices bearing this symbol.

USB charging cable:

= protection class III

Delta-Sport Handelskontor GmbH hereby declares that this product meets the following basic requirements, as well as other important regulations:

2014/53/EU – RED Directive

2011/65/EU – RoHS Directive

Full declarations of conformity are available at:
http://www.conformity.delta-sport.com

Date of manufacture (month/year): 02/2020

Symbol for DC voltage

Intended use

This is a recreational product for persons aged 8 years and over and is intended for private, domestic use only.
This product must only be used in suitable weather conditions and in authorised areas.

Further information is provided under the headings ‘Safety information’, ‘Foreseeable misuse’ and ‘Suitable flight environment’.

Symbols used

WARNING:
The signal word indicates a hazard with a medium risk level, which, if not avoided, can result in death or serious injury.

CAUTION:
The signal word indicates a hazard with a low risk level that can result in minor or moderate injury if not avoided.

NOTE:
Further information on the use of the device!

Moving parts.
Hold away from your body!

Safety information

WARNING: not suitable for children under 8 years of age.

- Before using the product for the first time: read through the user information with your child.

WARNING: none of the packaging materials or attachments are part of the product itself, and must be removed for safety reasons before the product is used.

- If you do not yet have adequate knowledge of handling remote-controlled quadcopters, please get in touch with an experienced model enthusiast or a model club.
- Ensure that the quadcopter has been assembled in accordance with the operating instructions.

WARNING: risk of eye injuries. To prevent injury to the eyes, do not use in close proximity to your face.

- Make sure weather conditions are suitable. The product must not get wet.
- Check that the rotors are correctly and securely fitted before each use.
- Do not operate the quadcopter if it is damaged.
- Do not make any alterations or modifications to the quadcopter.
- Check that your quadcopter and the remote control are in reliable working order before each use. Pay attention to visible damage, such as faulty connectors or damaged cables.
  All moving parts on the product must move smoothly, but there must be no play in the bearings.
- If cables or connections are damaged, have them replaced by authorised service personnel or by customer service.
- Always switch on the remote control first. Only then can the rechargeable battery be inserted into the model and the quadcopter switched on. If the procedure is not followed in this order, the product may react unpredictably and the rotors could start unintentionally!
- When the rotors are running, make sure that there are no objects or body parts in the rotational and suction area of the rotors. Keep hands, face, hair and loose clothing away from the rotors. Do not touch any moving parts.
- Always remove the rechargeable battery from the quadcopter during maintenance or cleaning.
- Do not take any risks when operating the quadcopter! Your own safety and the safety of your immediate environment depends on your responsible handling of the quadcopter.
- Check for potential causes of accidents in the flying area, e.g. candles or glasses, and ensure that there are no children, pets or other animals in the vicinity of the quadcopter. Maintain a distance of at least 5m.
- For indoor flying, an area of at least 6 x 4m must be available. If you do not have access to such a large indoor area, the quadcopter may only be flown outdoors. Outdoors, the quadcopter must not be flown beyond your line of sight, and may not fly higher than a maximum altitude of 100m. Always maintain a minimum distance of 5m.

- Select a suitable location (open space) to operate the quadcopter. Flying over the following areas is prohibited, and a distance of 100m from these areas must be maintained: crowded areas, accident sites, disaster areas and other areas where public authorities and organisations are engaged in security/safety activities; over mobile installations and troops of the armed forces conducting announced manoeuvres and military exercises; nature conservation areas; residential areas; industrial plants; penal institutions; involuntary treatment facilities; military installations and organisations; power generation and distribution infrastructure; facilities in which Protection Level 4 work is being carried out that requires prior authorisation under the Ordinance on Biological Substances, unless the facility operator has given express permission; hospitals; public motorways; public waterways; railway infrastructure; state and county constitutional bodies or supreme or higher state or county authorities; embassies and consulates; international organisations that are located in an area based on international law; and police property and property of other security agencies.
- Do not fly the quadcopter in areas where temperatures can change rapidly, e.g. over a fire or over water surfaces.
- Flight over the following areas is prohibited, and a distance of 1.5km from these areas must be maintained: airports, airfield control zones, state and military buildings. Local flight exclusion zones must be checked before each flight.
- The quadcopter has been designed for use by laypeople as well as experienced/trained users. Users with sight or hearing impairments must only use the quadcopter under the supervision of those without impairments. The user's reactive capacity must not be compromised: tiredness, and the influence of alcohol or medication can lead to incorrect responses. Additional skills are not required (e.g. training etc.). There are no operating restrictions based on gender or left/right-handedness.
- Never fly the quadcopter directly at other people, animals or yourself.
- The motor, electronics and rechargeable battery can heat up while the quadcopter is in operation. For this reason, take a break of 5–10 minutes before recharging the battery or installing another previously charged battery.
- Improper operation can cause serious personal injury and damage to property! For this reason, make sure that you maintain a safe distance from other people, animals and objects when flying.
- Always leave the remote control switched on while the quadcopter is in operation. Always first disconnect the battery connector from the quadcopter connector after landing. The remote control can then be switched off.
- In the event of a defect or a malfunction, the cause of the defect must first be resolved before you restart the quadcopter.
- Do not expose the quadcopter or the remote control to direct sunlight or high temperatures for extended periods of time.
- In the event of a serious crash (for example, from a significant height), the calibration may be damaged or detuned.
  It is therefore imperative that complete functionality is checked before a new flight!
- In the event of a crash, the throttle must be brought down to zero immediately. Rotating rotors can be damaged during contact with obstacles or on impact. Before a new flight, always check them for possible cracks or breakages!
- In order to prevent damage to the quadcopter from crashing due to under-voltage, or to the rechargeable battery due to deep discharge, always keep a close eye on the under-voltage indicator lights (see section on 'Under-voltage warning').
- In some countries, insurance is mandatory for model aircraft and model helicopters which are flown outdoors. Please consult your personal liability insurer and ensure that your quadcopter is included in this insurance.

Battery warning notices!

GENERAL WARNING NOTICES

- Always keep batteries out of reach of children.
- Cleaning and maintenance must not be carried out by children without supervision.

- When necessary, clean the battery and device contacts with a clean, dry cloth.
- Do not expose the batteries to extreme conditions (e.g. radiators or direct sunlight).
- Handle damaged or leaking batteries with extreme caution and dispose of them properly as soon as possible. Wear gloves when doing so.
- If you come into contact with battery acid, wash the affected area with soap and water. If battery acid gets in your eye, rinse it with water and seek medical attention immediately!
- Batteries must not be swallowed! If this does happen, you must see a doctor immediately!
- Never throw batteries or the rechargeable battery into fire or put them on hot surfaces (e.g. a radiator or a stove). Never open the battery casing or the foil or short-circuit the contacts. There is a risk of fire or explosion!
- Avoid external mechanical influences (e.g. blows, sharp objects or crushing). There is a risk of fire or explosion!
- Do not expose the batteries or the rechargeable battery to temperatures below 10 °C or over 45 °C.

ADDITIONAL BATTERY WARNING NOTICES (REMOTE CONTROL)

- Only use batteries from the same manufacturer and of the same type.
- Remove the batteries when they are flat, or if the product is not in use for an extended period.
- New and used batteries must not be used together.
- Replace all batteries at the same time.
- Non-rechargeable batteries must not be charged.
- **Warning:** batteries must not be charged or reactivated by other means, taken apart, thrown into fire or short-circuited. There is a risk of fire or explosion!
- Pay attention to the correct polarity (+/-) when inserting the batteries.
- Dispose of used batteries properly at local collection points or retailers.

ADDITIONAL WARNINGS FOR RECHARGEABLE BATTERY (QUADCOPTER)

- Never leave batteries charging unattended.
- Never charge the rechargeable battery immediately after use. Always allow the rechargeable battery to cool down first (at least 5 – 10 minutes).
- Only use the USB cable provided to charge the rechargeable battery.
- Only charge intact and undamaged rechargeable batteries. If the outer insulation of the battery is damaged or if the battery is deformed or bloated, it must not be charged under any circumstances. In this case, there is an acute risk of fire and explosion!
- Since both the USB cable and the rechargeable battery heat up during the charging process, it is vital to ensure there is adequate ventilation. Never cover the USB cable or the battery!
- Disconnect the battery from the USB cable when it is fully charged.
- Never charge or store the rechargeable battery near large heat sources or open fires, as this could result in a fire or an explosion.
- Do not leave the rechargeable battery unattended while charging, and watch out for possible overheating of the rechargeable battery.
- Never charge a rechargeable battery that has expanded as a result of overheating, dropping or overcharging.
- Never charge a rechargeable battery that is punctured or damaged. Examine the rechargeable battery very closely for such damage if it has been dropped. If the rechargeable battery is damaged, dispose of it according to the regulations in your country.
- If the rechargeable battery catches fire during the charging process, extinguish this type of battery with plenty of water.
- The USB cable must only be used in dry, enclosed indoor areas. The USB cable and rechargeable battery must not get damp or wet.
- Never short-circuit the rechargeable battery. There is a risk of fire or explosion.
- Never carry rechargeable batteries in trouser pockets or carry bags. Watch out for sharp or angular objects which could damage your rechargeable battery.

- If the battery has been subjected to a strong impact, store it in a very secure place (e.g., in a metal box) for the next 30 minutes. Pay attention to whether the rechargeable battery expands and/or overheats.
- Never try to manipulate, modify or repair the rechargeable battery.
- After the flight, disconnect the rechargeable battery from the electronics of the quadcopter. Do not leave the rechargeable battery connected to the electronics if you are not using the device (e.g. during transport or storage). Otherwise, the rechargeable battery could be heavily discharged. This will destroy the battery and make it unusable! There is also the risk of malfunction due to interference pulses. The rotors could start unintentionally and cause damage or injury.
- Never damage the outer shell of the rechargeable battery. Do not cut the foil sheath. Do not pierce the rechargeable battery with sharp objects. There is a risk of fire and explosion!
- Dispose of used rechargeable batteries properly at the end of their life span at local collection points or retailers.

Foreseeable misuse

- Take care not to misuse the product in any of the following ways:
- Do not operate the product in unsuitable weather or environmental conditions (e.g. in rain, snow, fog or at night).
- Do not operate the product in too small a space (under 6 x 4m), or if there are objects, people or animals within a radius of 5m.
- Never fly over flight exclusion zones, prohibited areas or official installations, and always comply with the minimum distances from such areas (see also 'Safety information').
- Do not invade the personal space of others.
- Do not give the product to anyone under the age of 8 years.
- Attaching loads or making modifications in any way is strictly prohibited.
- Do not operate the product if there are loose or defective parts (e.g. after a collision or crash).

Inserting the batteries into the remote control (Fig. D)

CAUTION: observe the following instructions to avoid mechanical and electrical damage.

Insert the enclosed batteries (5) into the battery compartment (2r) of the remote control (2).

Inserting the batteries

1. Using the Phillips screwdriver (6), loosen the screw of the battery compartment cover (2q) on the back of the remote control (2) and remove the battery compartment cover (2q).
2. Carefully insert 2 x 1.5V AA LR6-type batteries (5) into the battery compartment (2r). The batteries must be fully inserted into the battery compartment (2r).

CAUTION: check the positive/negative poles of the batteries (5) and ensure that they are inserted correctly, as marked on the bottom of the battery compartment (2r).

3. Refasten the battery compartment cover (2q) onto the back of the product.

Replacing the batteries

CAUTION: observe the following instructions to avoid mechanical and electrical damage.

When the batteries (5) are flat, replace them as described in the insertion instructions above. Remove the batteries (5) from the product before inserting new ones.

Inserting the rechargeable battery (Fig. E)

Insert the rechargeable battery (3) into the rechargeable battery compartment (1f) of the quadcopter (1) until it locks firmly in place.

Removing the rechargeable battery (Fig. E)

Remove the rechargeable battery (3) from the quadcopter (1) by pressing on the rechargeable battery clamp and pulling the battery out of the battery compartment (1f).

Charging the rechargeable battery

1. Remove the rechargeable battery (3) from the rechargeable battery compartment (1f) of the quadcopter (1) (see 'Removing the rechargeable battery').
2. Connect the end (4a) of the USB charging cable (4) to the USB socket (3a) of the rechargeable battery (3) (Fig. F).
3. Plug the other end (4b) of the USB charging cable (4) into a USB port on a powered-on computer or charging unit with a USB port (Fig. F).
4. The charging indicator light of the rechargeable battery (3) switches on while charging (Fig. F) and lights up red. Once charging is complete, the charging indicator light of the rechargeable battery (3) lights up green.

NOTE: charging takes approx. 40–70 minutes.

5. After charging, disconnect the end (4a) of the USB charging cable (4) from the USB socket (3a) and unplug the other end (4b) of the USB charging cable (4) from the USB port.
6. Insert the rechargeable battery (3) fully into the rechargeable battery compartment (1f) (see 'Inserting the rechargeable battery').

Under-voltage warning

The indicator lights (1g) start flashing fast when the rechargeable battery (3) is almost empty. Land the quadcopter (1) as soon as you notice this.

Suitable flight environment

For ideal flight conditions, the following criteria should be met:

- Calm wind conditions, up to force 3 winds.
- Check local weather reports for current weather conditions and forecast changes.
- People must remain a safe distance of 5m from the quadcopter when it is taking off.
- Be aware of obstacles before flying, and move them out of the way if possible, or maintain a safe distance from them (> 5m).
- Observe your surroundings and look out for variables such as pedestrians, cyclists and traffic/vehicles.
- Find a large, wide, open area without obstructions; pay particular attention to buildings, crowds, power lines and trees.
- For aerobatic activities, such as loops, there should be a space of approx. 10m in all directions.
- Take care to select a dry environment with no precipitation. Do not fly the quadcopter in poor or damp weather conditions (e.g. in snow, fog or at night). The quadcopter must only be operated when visibility is good.
- The quadcopter may only be operated in temperatures between 10 °C and 45 °C.
- Pay attention to the restrictions in the Drone Ordinance with regard to prohibited areas (see the section on 'Safety information').

Flight preparation

Pay attention to the following before you start flying the quadcopter (1):

1. Always place the quadcopter (1) on an even surface for take-off, so that the height sensor functions correctly.

NOTE: the on/off switch (1d) is situated on the top of the quadcopter (1).

2. Always move the throttle (2h) and control levers (2l) slowly and carefully, with sensitivity.

NOTE: after activation, the throttle springs back to the centre position, and the quadcopter (1) rises/drops to a specific height and remains there.

3. Keep your attention continuously focused on the quadcopter (1) during the flight!

CAUTION: always keep the quadcopter in sight during flight!

4. Do not hang any loads on the quadcopter (1).

CAUTION: check the rotor guards (1c) (Fig. B) before each flight to ensure they are secure and undamaged.
Otherwise there is a risk of damage to the rotor blades (1a, 1b) during a flight, which may cause injury.

Taking off and controlling the quadcopter

When flying, watch out for foreseeable misuse as a result of:

- sudden changes in the weather

- sudden changes in wind (gusts)
- loss of visibility
- direct sunshine (overheating, loss of flight control due to impaired vision)

Taking off (Fig. H)

1. Press the on/off (switch) (2a) on the remote control (2) to turn the remote control on. The display lights (2j) flash.

NOTE: always switch the remote control (2) on first.

2. Insert the rechargeable battery (3) into the rechargeable battery compartment (1f) of the quadcopter (1).
3. Press the on/off switch (1d) on the quadcopter (1) to turn the quadcopter (1) on. The indicator lights (1g) of the quadcopter (1) flash alternately and a signal tone is emitted from the remote control (2).
4. Slide the throttle (2h) all the way forward, and then all the way back.

NOTE: this process establishes contact between the quadcopter (1) and the remote control (2).

If the throttle (2h) is not first moved forward and then back, the quadcopter (1) remains secured and will not be ready for flight. Acoustic signals are emitted from the remote control (2).

The indicator lights (1g) on the quadcopter (1) light up continuously. The quadcopter (1) is now ready for flight.

NOTE: the display (2j) shows the speed and 'NORMAL' mode.

5. Press the 'START/LAND' button (2i) located at the front of the remote control. The rotor blades will start to turn.

Controlling the quadcopter

The integrated height sensor ensures that the quadcopter (1) automatically maintains a steady height, and it facilitates initial flight manoeuvres. You have several control options:

- **Ascending/descending (throttle) (Fig. I)**
  By pressing the throttle (2h) forwards, the rotational speed of the rotors (1a, 1b) is increased. The quadcopter (1) will then begin to ascend. By moving the throttle (2h) backwards, the rotational speed of the rotors (1a, 1b) is decreased. The quadcopter (1) will then begin to descend.
- **Turning left/right (yaw rotation) (Fig. J)**
  By moving the throttle (2h) to the left or right, the quadcopter (1) rotates on the vertical axis, i.e. the quadcopter (1) rotates to the left or right.
- **Moving forwards/backwards (pitch) (Fig. K)**
- By moving the control lever (2l) forwards or backwards, the quadcopter (1) moves in the corresponding direction.
- **Hovering left/right (roll) (Fig. L)**
  If you want to perform a movement to the right or left without rotating the quadcopter (1), i.e. hover sideways, move the right control lever (2l) to the left or right.
- **Turning (yaw trimming) (Fig. O)**
  If the quadcopter (1) moves around its own axis of its own accord without you moving the throttle (2h), you can correct this with the yaw-trimming.
  If the quadcopter (1) is turning clockwise, press the yaw-trim button to the left (2f), and if it is turning anti-clockwise, press the trim button to the right (2d). In this way you counter the yaw movement by trimming in the opposite direction.
- **Direction (roll and pitch trim) (Fig. P)**
  If there is a forwards or backwards movement, even though you are not using the control lever (2l) at all, you can correct this by pitch trimming. If the quadcopter (1) is flying forwards, press the pitch-trim button (2o) and vice versa (2m). You can counteract the unwanted movement with the trim setting.
  If the quadcopter (1) moves sideways of its own accord, you can correct this by roll trimming.
  If the quadcopter hovers to the left (1) sideways, press the trimming button (2n) to the right and vice versa (2p). This allows you to counteract the unwanted movement.
- **Headless mode (Fig. Q)**
  This refers to a flight aid that when activated enables the quadcopter (1) to always fly in the direction it is steered. It is recommended for pilots with little flying experience.

When headless mode is activated using button (2c), from the pilot's viewpoint, the quadcopter (1) always flies to the right when the control lever (2l) is steered to the right, regardless of which way the front of the quadcopter (1) is facing.

NOTE: the direction of the remote control (2) and the quadcopter (1) must correspond exactly when activating headless mode!

Only activate headless mode in the position specified, otherwise it may result in control commands not being carried out correctly.

1. To activate headless mode, put the quadcopter (1) and the remote control (2) one behind the other and press the button (2c) on the remote control (2).
   The 'HEADLESS' field lights up on the display (2j) and the quadcopter (1) lights flash slowly as long as the mode is activated.
2. To deactivate the mode, press the button (2c) again. On the display (2j), 'NORMAL' is illuminated and the quadcopter lights light up continuously again.

- **Automatic return to the pilot (Fig. R)**
  Press the active button (2c) for approx. 3 seconds if the quadcopter (1) is to return to the starting point.

NOTE: the return route can vary as a result of the quadcopter (1) turning. The operation can be cancelled by pressing the button (2c) repeatedly or by moving the control lever (2l).

Setting the speed (Fig. M)

You can adjust the flight speed by repeatedly pressing the buttons (2e, 2g) on the remote control (2). The default setting is speed 2, from a total of four speed levels.

The display (2j) shows the various levels.

Speed 1 (one beep)

For first attempts with little flight experience.

Speed 2 (two beeps)

For pilots with some experience.

Speed 3 (three beeps)

For experienced pilots.

Speed 4 (four beeps)

For very experienced pilots.

NOTE: when the remote control is turned off and on, the quadcopter (1) is reset to speed 2.

360° rollover (Fig. N)

1. Fly the quadcopter (1) to a height of approx. 10m.
2. Keep it hovering and press the button (2k) located at the front of the remote control once. A signal tone is emitted and the 'FLIP' light is shown on the display (2j).
3. Move the control lever (2l) in the direction in which the rollover is to be performed.
4. The quadcopter (1) will perform a 360° rollover.

After the rollover, the quadcopter (1) will be in normal flight mode and you can perform another rollover.

Repeat steps 1 – 4 to do so.

Press the button (2k) again if you do not want to perform a rollover, but had already pressed the button.

CAUTION: you need sufficient flight altitude for a 360° rollover (at least 10m).

Calibration

You may occasionally find that the quadcopter (1) flies erratically and needs to be calibrated. In this event, follow the steps below:

1. Place the powered-on quadcopter (1) on a horizontal, level surface.
2. Simultaneously slide the throttle (2h) and the control lever (2l) on the powered-on remote control (2) towards yourself and at an angle outwards. The indicator lights (1g) on the quadcopter (1) will flash for approx. 3 seconds. Once the indicator lights (1g) are steadily illuminated, the calibration is complete and the quadcopter is ready to fly.

NOTE: repeat the calibration if the quadcopter still flies erratically in one direction.

Ending the flight

1. Press the 'START/LAND' button (2i). The quadcopter slowly descends and lands.
   After the quadcopter (1) has landed safely, switch it off in the proper sequence.

2. Press the on/off switch (1d) on the quadcopter (1) to turn the quadcopter (1) off.
3. Press the on/off (switch) (2a) on the remote control (2) to turn the remote control off.
4. Remove the rechargeable battery (3) (see 'Removing the rechargeable battery').

Rotor guards

The rotor guards (1c) act as protection against injuries (e.g. cuts, skin injuries or eye injuries) and to protect against, or in the event of, collisions. These are firmly mounted. If the rotor guards become loose, firmly reattach them and check the function and correct placement of the rotor guards (1c).

WARNING: never operate the quadcopter (1) without rotor guards (1c)! So as not to endanger yourself and/or other people and animals, do not remove the rotor guards (1c) arbitrarily!

Cleaning, repair and storage

CAUTION: before undertaking any work on the quadcopter, the on/off switch (1d) must be switched off and the rechargeable battery (3) must be removed.

The quadcopter (1) must always be kept dry, and any dirt such as wool fibres, hair, dust, etc., must be removed after every flight.
Use a dry cloth to dry the quadcopter; the electronics, rechargeable battery and motor must not be exposed to water.
Store the quadcopter (1) in a dry, dust-free location away from direct sunlight. The optimum storage temperature is between 10 °C and 25 °C.
Disconnect the rechargeable battery connector (3a) or the connection to the charging cable (4) when not in use. Remove the batteries (5) from the remote control.

Replacing the rotor blades (Fig. G)

Replace the rotor blades (A), (B) as soon as they are damaged.
Use the tool (7) to remove the rotor blades (1a), (1b) from the quadcopter (1).

NOTE: there are two different types of rotor blades (A), (B). The rotor blades (A) rotate clockwise, and the rotor blades (B) rotate anti-clockwise. The rotor blades are shaded in grey on the diagrams for clarity.
Both kinds are marked on the upper side with A or B, which must be noted when replacing and must match the markings on the quadcopter (1).

WARNING: if the rotor blades (A), (B) are damaged, there is a risk of pieces falling off during use and causing damage or harming the environment.
Follow the steps below to change a rotor blade (A), (B):

1. Attach the open side of the tool (7) under the rotor blade (A), (B) and lift it off the quadcopter (1).
2. Place the replacement rotor blade (A), (B) into the same position that the damaged rotor blade (A), (B) came out of.
3. Press the rotor blade (A), (B) with the other side of the tool (7) securely onto the quadcopter (1).

CAUTION: always place the rotor blades marked A onto the rotor arms labelled A. Place the rotor blades marked B onto the rotor arms labelled B.

Disposal

In the interest of protecting the environment, do not throw your product into the household waste once you are finished with it, but rather take it to a specialty disposal facility. Find out about collection sites and their hours of operation from your local authority. Defective or used batteries must be recycled pursuant to Directive 2006/66/EC and changes to it. Return batteries and/or the product via the collecting sites provided. Packaging materials, such as plastic bags, must be kept away from children. Keep the packaging materials out of reach of children.

Environmental damage caused by improper disposal of batteries! Batteries may not be disposed of with household waste. They may contain toxic heavy metals and are subject to hazardous waste treatment. The chemical symbols of the heavy metals are as follows:

Cd = cadmium, Hg = mercury, Pb = lead. Dispose of used batteries at a municipal collection site.

Dispose of the product and packaging in an environmentally friendly manner.

Note the label on the packaging materials when separating waste, as these are labelled with abbreviations (a) and numbers (b) with the following meaning: 1–7: plastics/20–22: paper and cardboard/80–98: composite materials.
The product and the packaging materials can be recycled, dispose of them separately for better treatment of waste. The Triman logo only applies to France. Find out how to dispose of the used product from your municipal or city administration.

Notes on the guarantee and service handling

The product was produced with great care and under constant supervision. You receive a three-year warranty for this product from the date of purchase. Please retain your receipt.
The warranty applies only to material and workmanship and does not apply to misuse or improper handling. Your statutory rights, especially the warranty rights, are not affected by this warranty. With regard to complaints, please contact the following service hotline or contact us by e-mail. Our service employees will advise as to the subsequent procedure as quickly as possible. We will be personally available to discuss the situation with you. Any repairs under the warranty, statutory guarantees or through goodwill do not extend the warranty period. This also applies to replaced and repaired parts. Repairs after the warranty are subject to a charge.

IAN: 331340_1907

GB Service Great Britain
Tel.: 0800 404 7657
E-Mail: deltasport@lidl.co.uk

Please take attention that changes or modification not expressly approved by the party responsible for compliance could void the user's authority to operate the equipment.
This device complies with Part 15 of the FCC Rules. Operation is subject to the following two conditions:
(1) This device may not cause harmful interference, and
(2) This device must accept any interference received, including interference that may cause undesired operation.

The pairing process is done inside the factory.

Possible errors

Potential errors are listed below, along with their causes and how to rectify them.

Error	Possible cause	Remedy
Remote control (2) does not respond.	Remote control (2) is switched off.	Turn on remote control (2).
	Batteries (5) incorrectly inserted.	Insert the batteries (5) correctly.
	Batteries (5) are flat.	Replace the batteries (5).
The quadcopter (1) does not respond.	The batteries (5) in the remote control (2) were incorrectly inserted or are flat.	Check the batteries (5) and replace if necessary.
	The rechargeable battery (3) in the quadcopter (1) is flat.	Charge the rechargeable battery (3).
	The indicator lights (1g) do not flash or light up.	Insert the rechargeable battery (3) into the quadcopter until it locks firmly in place.
	The quadcopter (1) is out of range.	Make sure that the distance between the remote control (2) and the quadcopter (1) is not more than 30m.
The quadcopter (1) cannot be controlled.	Too strong a wind or draught.	The quadcopter (1) is only suitable for calm conditions with no wind or up to force 3 winds.
	The quadcopter (1) needs to be calibrated.	Place the powered-on quadcopter (1) on a horizontal, level surface. Simultaneously slide the throttle (2h) and the control lever (2l) on the powered-on remote control (2) towards yourself and at an angle outwards. The indicator lights (1g) on the quadcopter (1) will flash for approx. 3 seconds. Once the indicator lights (1g) are steadily illuminated, the calibration is complete and the quadcopter (1) is ready to fly. **NOTE:** repeat the calibration if the quadcopter (1) still flies erratically in one direction.
The quadcopter (1) will not fly upwards.	Not enough throttle.	Slide the throttle (2h) forward completely.
	The rechargeable battery (3) is flat.	Charge the rechargeable battery (3).
The rotor guards (1c) are not securely fixed.	Collision, crash.	If the rotor guards (1c) become loose, firmly reattach them and check the function and correct placement of the rotor guards (1c).
The quadcopter (1) indicator lights (1g) flash alternately.	Contact has not been established between the quadcopter (1) and the remote control (2).	Slide the throttle (2h) on the remote control (2) all the way forward, and then all the way back. This process establishes contact between the quadcopter (1) and the remote control (2).
	The rechargeable battery (3) is almost flat.	Switch off the quadcopter (1) and remove the rechargeable battery (3), so it can be charged.