TEST REPORT

Product Name : Light source
Model Number : QPMR16-PA-RGBCW 5.5W (SEH24082), S11110
FCC ID : 2AVJP-GU53WIFRGBCW

Prepared for : Hangzhou Sky-Lighting Co., Ltd.
Address : No.161 North Star-Bridge Road. Linping. Hangzhou. Zhejiang. 311100 China

Prepared by : EMTEK (SHENZHEN) CO., LTD.
Address : Building 69, Majialong Industry Zone, Nanshan District, Shenzhen, Guangdong, China

Tel: (0755) 26954280
Fax: (0755) 26954282

Report Number : ENS2508260066W04501R
Date(s) of Tests : August 26, 2025 to January 16, 2026
Date of issue : January 17, 2026

Table of Contents

1 TEST RESULT CERTIFICATION 3

2 EUT TECHNICAL DESCRIPTION 5

3 SUMMARY OF TEST RESULT 6

4 TEST METHODOLOGY 7

4.1 GENERAL DESCRIPTION OF APPLIED STANDARDS 7
4.2 MEASUREMENT EQUIPMENT USED 7
4.3 DESCRIPTION OF TEST MODES 8

5 FACILITIES AND ACCREDITATIONS 9

5.1 FACILITIES 9
5.2 EQUIPMENT 9
5.3 LABORATORY ACCREDITATIONS AND LISTINGS 9

6 TEST SYSTEM UNCERTAINTY 10

7 SETUP OF EQUIPMENT UNDER TEST 11

7.1 RADIO FREQUENCY TEST SETUP 1 11
7.2 RADIO FREQUENCY TEST SETUP 2 11
7.3 CONDUCTED EMISSION TEST SETUP 14
7.4 BLOCK DIAGRAM CONFIGURATION OF TEST SYSTEM 15
7.5 SUPPORT EQUIPMENT 15

8 TEST REQUIREMENTS 16

8.1 DTS 6DB BANDWIDTH 16
8.2 DTS 99%BANDWIDTH 18
8.3 MAXIMUM PEAK CONDUCTED OUTPUT POWER 20
8.4 MAXIMUM POWER SPECTRAL DENSITY 22
8.5 UNWANTED EMISSIONS IN NON-RESTRICTED FREQUENCY BANDS 24
8.6 RADIATED SPURIOUS EMISSION 30
8.7 CONDUCTED EMISSIONS TEST 36
8.8 ANTENNA APPLICATION 37

1 TEST RESULT CERTIFICATION

Applicant	:	Hangzhou Sky-Lighting Co., Ltd.
Address	:	No.161 North Star-Bridge Road. Linping. Hangzhou. Zhejiang. 311100 China
Manufacturer	:	Hangzhou Sky-Lighting Co., Ltd.
Address	:	No.161 North Star-Bridge Road. Linping. Hangzhou. Zhejiang. 311100 China
EUT	:	Light source
Model Name	:	QPMR16-PA-RGBCW 5.5W (SEH24082), S11110
Trademark	:	N/A

Measurement Procedure Used:

APPLICABLE STANDARDS	
STANDARD	**TEST RESULT**
FCC 47 CFR Part 2, Subpart J FCC 47 CFR Part 15, Subpart C	**PASS**
IC RSS-GEN, Issue 5(04-2018)+A1(03-2019)+A2(02-2021) IC RSS-247 Issue 3(08-2023)	**PASS**

The above equipment was tested by EMTEK(SHENZHEN) CO., LTD. The test data, data evaluation, test procedures, and equipment configurations shown in this report were made in accordance with the procedures given in ANSI C63.10 (2020) and the energy emitted by the sample EUT tested as described in this report is in compliance with the requirements of FCC Rules Part 2, Part 15.247, IC RSS-247 Issue 3 and IC RSS-GEN, Issue 5.

The test results of this report relate only to the tested sample identified in this report.

Date of Test : August 26, 2025 to October 18, 2025

Prepared by : Una Yu /Editor

Reviewer : Joe Xia /Supervisor

Approve & Authorized Signer : Lisa Wang/Manager

EMTEK (SHENZHEN) CO., LTD. TESTING

Modified History

Version	Report No.	Revision Date	Summary
/	ENS2508260066W04501R	/	Original Report

2 EUT TECHNICAL DESCRIPTION

Characteristics	Description
Product:	Light source
Model Number:	QPMR16-PA-RGBCW 5.5W (SEH24082), S11110
Test Sample S/N:	N/A
Variant Number:	N/A
Device Type：	Bluetooth V5.1
Data Rate :	1Mbps
Modulation:	GFSK
Operating Frequency Range:	2402-2480MHz
Number of Channels:	40 Channels
Antenna Type:	Driver Antenna
Antenna Gain:	-9.86 dBi
Test Voltage:	AC 120V/60Hz
Temperature Range:	-40 ℃ ~ +105 ℃
Software Version:	N/A
Hardware Version:	N/A

Note: for more details, please refer to the User's manual of the EUT.

3 SUMMARY OF TEST RESULT

FCC PartClause	IC Part Clause	Test Parameter	Verdict	Remark
15.247(a)(2)	RSS-247, 5.2(a) RSS-Gen6.7	EmissionBandwidth	PASS	
15.247(b)(3)	RSS-247, 5.4(d) RSS-Gen6.12	Maximum Peak Conducted Output Power	PASS	
15.247(e)	RSS-247, 5.2(b) RSS-Gen6.12	Maximum Power Spectral Density Level	PASS	
15.247(d)	RSS-247, 5.5	Unwanted Emission Into Non-Restricted Frequency Bands	PASS	
15.247(d)	RSS-247, 5.5	Unwanted Emission Into Restricted Frequency Bands (conducted)	PASS	
15.247(d) 15.209 15.205	RSS-Gen8.9 RSS-Gen8.10 RSS-Gen6.13 RSS-247, 3.3 RSS-247, 5.5	Radiated Spurious Emission	PASS	
15.207	RSS-Gen 8.8	Conducted EmissionTest	PASS	
15.203 15.247(b)	RSS-Gen6.8 RSS-247, 5.4	Antenna Application	PASS	
NOTE1:N/A (Not Applicable) NOTE2:According to FCC OET KDB 558074, the report use radiated measurements in the restricted frequency bands. In addition, the radiated test is also performed to ensure the emissions emanating from the device cabinet also comply with the applicable limits.				

RELATED SUBMITTAL(S)/GRANT(S):

This submittal(s) (test report) is intended for **FCC ID: 2AVJP-GU53WIFRGBCW** filing to comply with Section 15.247 of the FCC Part 15, Subpart C Rules.

4 TEST METHODOLOGY

4.1 GENERAL DESCRIPTION OF APPLIED STANDARDS

According to its specifications, the EUT must comply with the requirements of the following standards:
FCC 47 CFR Part 2, Subpart J
FCC 47 CFR Part 15, Subpart C
IC RSS-GEN, Issue 5(04-2018)+A1(03-2019)+A2(02-2021)
IC RSS-247 Issue 3(08-2023)
FCC KDB 558074 D01 15.247 Meas Guidance v05r02

4.2 MEASUREMENT EQUIPMENT USED

Conducted Emission Test Equipment

Equipment	Manufacturer	Model No.	Serial No.	Last Cal.	Cal. Interval
EMI Test Receiver	Rohde & Schwarz	ESCI	101384	2026/1/5	1Year
Coaxial Cable	TIMES	\	\	2026/1/5	1Year
AMN	Rohde & Schwarz	ENV216	101161	2026/1/5	1Year

For Spurious Emissions Test

Equipment	Manufacturer	Model No.	Serial No.	Last Cal.	Cal. Interval
EMI Test Receiver	Rohde & Schwarz	ESU 26	100154	2026/1/5	1Year
Pre-Amplifie	Lunar EM	LNA30M3G-25	J10100000070	2026/1/5	1Year
Bilog Antenna	Schwarzbeck	VULB9163	661	2025/1/18	2 Year
Horn antenna	Schwarzbeck	BBHA9120D	9120D-1177	2025/5/17	2 Year
Pre-Amplifie	SKET	LNPA_0118G-45	SK2019051801	2026/1/5	1Year
Loop Antenna	Schwarzbeck	FMZB1519	1519-012	2025/1/13	2 Year
Spectrum Analyzer	Rohde & Schwarz	FSV40	100967	2026/1/5	1Year
Horn antenna	Schwarzbeck	BBHA9170	9170-399	2026/1/5	1Year
Coaxial Cable	TIMES	NmNm-7-C15702	N/A	2026/1/5	1Year
Coaxial Cable	TIMES	HF290-NMSM-6.5M	N/A	2025/1/13	2 Year
Coaxial Cable	TIMES	LMR-240 N-N	N/A	2026/1/5	1Year

For other test items:

Equipment	Manufacturer	Model No.	Serial No.	Last Cal.	Cal. Interval
Signal Analyzer	Agilent	N9010B	MY53470879	2026/1/5	1Year
RF Control Unit (Power Meter)	Tonscend	JS0806-2	/	2026/1/5	1Year
RF Cable	Rosenberger	/	/	2026/1/5	1Year

4.3 DESCRIPTION OF TEST MODES

The EUT has been tested under its typical operating condition.
The EUT configuration for testing is installed on RF field strength measurement to meet the Commissions requirement and operating in a manner which intends to maximize its emission characteristics in a continuous normal application.

The Transmitter was operated in the normal operating mode. The TX frequency was fixed which was for the purpose of the measurements.

Test of channel included the lowest and middle and highest frequency to perform the test, then record on this report.

Those data rates (Bluetooth DTS :1Mbps) were used for all test.

Pre-defined engineering program for regulatory testing used to control the EUT for staying in continuous transmitting and receiving mode is programmed.

Frequency and Channel list for Bluetooth DTS:

Channel	Frequency (MHz)	Channel	Frequency (MHz)	Channel	Frequency (MHz)
0	2402	19	2440	…	…
1	2404	20	2442	37	2476
2	2406	21	2444	38	2478
…	…	…	…	39	2480
Note: fc=2402MHz+k×1MHz k=1 to 39					

Test Frequency and channel for Bluetooth DTS:

Lowest Frequency		Middle Frequency		Highest Frequency	
Channel	Frequency (MHz)	Channel	Frequency (MHz)	Channel	Frequency (MHz)
0	2402	19	2440	39	2480

5 FACILITIES AND ACCREDITATIONS

5.1 FACILITIES

All measurement facilities used to collect the measurement data are located at:

EMTEK (Shenzhen) Co., Ltd.
Building 69, Majialong Industry Zone District, Nanshan District, Shenzhen, China
The sites are constructed in conformance with the requirements of ANSI C63.7, ANSI C63.4 and CISPR Publication 22.

5.2 EQUIPMENT

Radiated emissions are measured with one or more of the following types of linearly polarized antennas: tuned dipole, biconical, log periodic, bi-log, and/or ridged waveguide, horn. Spectrum analyzers with preselectors and quasi-peak detectors are used to perform radiated measurements.

Conducted emissions are measured with Line Impedance Stabilization Networks and EMI Test Receivers.

Calibrated wideband preamplifiers, coaxial cables, and coaxial attenuators are also used for making measurements.

All receiving equipment conforms to CISPR Publication 16-1, “Radio Interference Measuring Apparatus and Measurement Methods.”

5.3 LABORATORY ACCREDITATIONS AND LISTINGS

Site Description EMC Lab.	:	**Accredited by CNAS** The Certificate Registration Number is L2291 The Laboratory has been assessed and proved to be in compliance with CNAS-CL01 (identical to ISO/IEC 17025:2017) **Accredited by FCC** Designation Number: CN1204 Test Firm Registration Number: 882943 **Accredited by A2LA** The Certificate Number is 4321.01 **Accredited by Industry Canada** The Conformity Assessment Body Identifier is CN0008
Name of Firm	:	EMTEK (SHENZHEN) CO., LTD.
Site Location	:	Building 69, Majialong Industry Zone, Nanshan District, Shenzhen, Guangdong, China

6 TEST SYSTEM UNCERTAINTY

The following measurement uncertainty levels have been estimated for tests performed on the apparatus:

Test Parameter	Measurement Uncertainty
Frequency error	±20Hz
Occupied Bandwidth	±0.5KHz
Transmitter output power	±0.6dB
Conducted spurious emissions	±3.2dB
Radiated spurious emissions	±4.5dB
Temperature	±1.2℃
Humidity	±3%
DC voltages	±0.25V
Time	±1%

Measurement Uncertainty for a level of Confidence of 95%

7 SETUP OF EQUIPMENT UNDER TEST

7.1 RADIO FREQUENCY TEST SETUP 1

The Bluetoothcomponent's antenna ports(s) of the EUT are connected to the measurement instrument per an appropriate attenuator. The EUT is controlled by PC/software to emit the specified signals for the purpose of measurements.

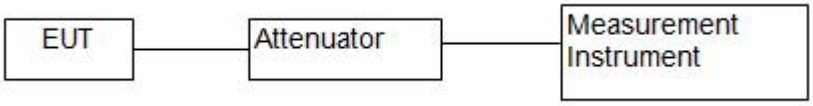

7.2 RADIO FREQUENCY TEST SETUP 2

The test site semi-anechoic chamber has met the requirement of NSA tolerance 4 dB according to the standards: ANSI C63.10. The test distance is 3m.The setup is according to the requirements in Section 13.1.4.1 of ANSI C63.10-2020 and CAN/CSA-CEI/IEC CISPR 22.
The maximal emission value is acquired by adjusting the antenna height, polarisation and turntable azimuth. Normally, the height range of antenna is 1 m to 4 m, the azimuth range of turntable is 0° to 360°, and the receive antenna has two polarizations Vertical (V) and Horizontal (H).

Below 30MHz：
The EUT is placed on a turntable 0.8 meters above the ground in the chamber, 3 meter away from the antenna (loop antenna). The Antenna should be positioned with its plane vertical at the specified distance from the EUT and rotated about its vertical axis for maximum response at each azimuth about the EUT. The center of the loop shall be 1 m above the ground. For certain applications, the loop antenna plane may also need to be positioned horizontally at the specified distance from the EUT.

Above 30MHz：
The EUT is placed on a turntable 0.8 meters above the ground in the chamber, 3 meter away from the antenna. The maximal emission value is acquired by adjusting the antenna height, polarisation and turntable azimuth. Normally, the height range of antenna is 1 m to 4 m, the azimuth range of turntable is 0° to 360°, and the receive antenna has two polarizations Vertical (V) and Horizontal (H).

Above 1GHz:
The EUT is placed on a turntable 1.5 meters above the ground in the chamber, 3 meter away from the antenna. The maximal emission value is acquired by adjusting the antenna height, polarisation and turntable azimuth. Normally, the height range of antenna is 1 m to 4 m, the azimuth range of turntable is 0° to 360°, and the receive antenna has two polarizations Vertical (V) and Horizontal (H).

Measurements shall be taken, using the following steps, at a test site that has been validated using the procedures of ANSI C63.4 or the latest CISPR 16-1-4 for measurements above 1 GHz, so as to simulate a near free-space environment (see RSS-Gen for applicable versions of ANSI and CISPR standards).
(1) Line the ground plane with absorbers between the transmitter and the receive antenna to minimize reflections. The absorbers used should have a minimum-rated attenuation of 20 dB through the measurement frequency range of interest. The absorbers shall be positioned to replicate the layout used when compliance with the applicable acceptability criterion was achieved, as set forth in the aforementioned standards on site validation.
(2) Set the height of the receive antenna to 1.5 m. The receive antenna must be one that was designed and fabricated to operate over the entire frequency range of interest, for example, an appropriate standard gain horn.
(3) The distance between the receive antenna and the radiating source shall be sufficient in order to ensure far-field conditions.
(4) Mount the transmitter at a height of 1.5 m.
(5) Configure the device under test (DUT) to produce the maximum power spectral density as measured while assessing compliance with Section 6.2.2 (i.e. channel frequency, modulation type and data rate). If the DUT is equipped with a detachable antenna and the antenna is intended for remote installation (i.e.

tower-mounted), the DUT may be substituted with a suitable signal generator. The level and frequency settings on the generator shall be set so as to reproduce the maximum power spectral density, measured within a 1 MHz bandwidth, obtained while assessing compliance to Section 6.2.2.
(6) Position the transmitter or the radiating antenna so that elevation pattern measurements can be taken.
(7) Find the 0° reference point in the horizontal plane.
(8) Care should be taken when positioning the receive antenna to avoid cross-polarization. Antennas of known mounting polarization should be assessed with the receive antenna oriented in the same polarity. If the polarization of the transmit antenna is unknown or the transmit antenna can be mounted in either polarization, e.i.r.p. measurements should be performed to find which
mounting polarity provides the highest e.i.r.p. value. Testing shall be carried out with the receive antenna and the DUT mounted in each polarity.
(9) The emission shall be centred on the display of the spectrum analyzer with the following settings:
i. If the power spectral density of the DUT was assessed with a peak detector and the antenna cannot be detached from the DUT, the spectrum analyzer shall be set to a peak detector with a resolution bandwidth and video bandwidth of 1 MHz.
ii. If the power spectral density of the DUT was assessed using a sample detector with power averaging and the antenna cannot be detached from the DUT, the spectrum analyzer shall be set to a sample detector, configured to produce 100 power averages and set with a resolution bandwidth, as well as a video bandwidth of 1 MHz.
iii. If the antenna can be detached from the DUT, a continuous wave (CW) signal equal to that of the power spectral density measurement may be used, the spectrum analyzer shall be set to peak detector with a resolution bandwidth and video bandwidth of 1 MHz.

(10) Rotate the turntable 360° recording the field strength at each step. Throughout the main beam of the antenna, the step size shall be kept to a maximum of 1°.
Once outside the main beam of the antenna, the maximum step size shall be as follows, when compared to the requirements of Section 6.2.2:
i. Between 0° and 8°, maximum step size of 2°;
ii. Between 8° and 40°, maximum step size of 4°;
iii. Between 40° and 45°, maximum step size of 1°;
iv. Between 45° and 90°, maximum step size of 5°.
Once the mask reaches 90°, the mask will be inverted and the step size will follow in the same manner as above.
For the purpose of this procedure, the main beam of the antenna is defined as the 3 dB beamwidth.
(11) Convert the measured field strength values in terms of e.i.r.p. density (dBW/1 MHz) using the following equation:

$$\text{e.i.r.p density(dBW/MHz)}=10\log((E*r)^2/30)$$

E = field strength in V/m
r = measurement distance in metres

(12) Plot the results against the emission mask with reference to the horizontal plane.
(13) Using the plot, the 0° can be rotated to determine the worst-case installation tilt angle.
(14) Testing shall be performed using the highest gain antenna for every antenna type, if applicable.
(15) Antenna type(s), antenna model number(s), and worst-case tilt angle(s) necessary to remain compliant with the elevation mask requirement set forth in Section 6.2.2(3) of RSS-247 shall be clearly indicated in the user manual.
The following figure is an example of a polar elevation mask measured using the Method 1 reference to dBμV/m at 3 m.

(a) Radiated Emission Test Set-Up, Frequency Below 30MHz

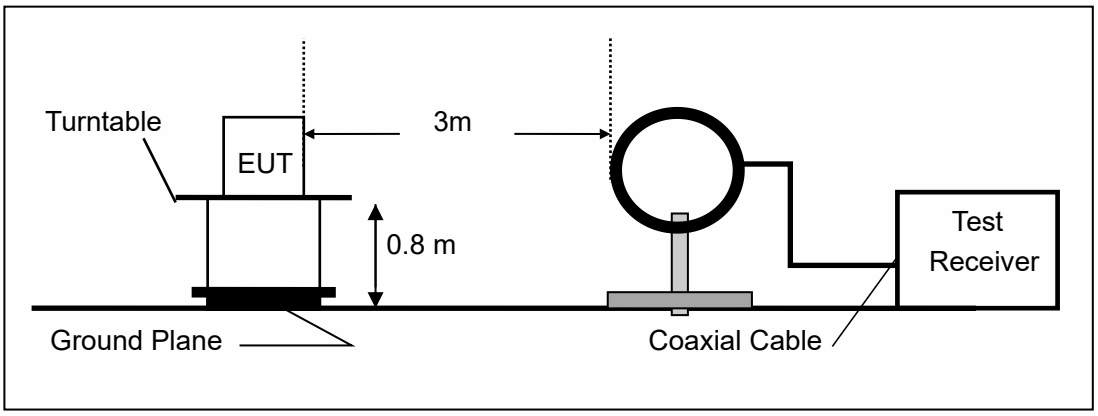

(b) Radiated Emission Test Set-Up, Frequency Below 1000MHz

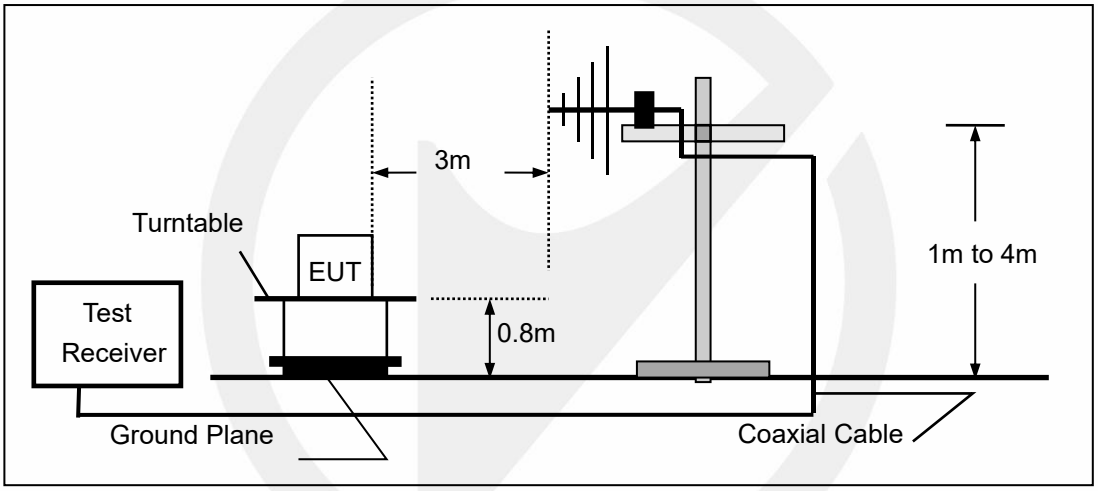

(c) Radiated Emission Test Set-Up, Frequency above 1000MHz

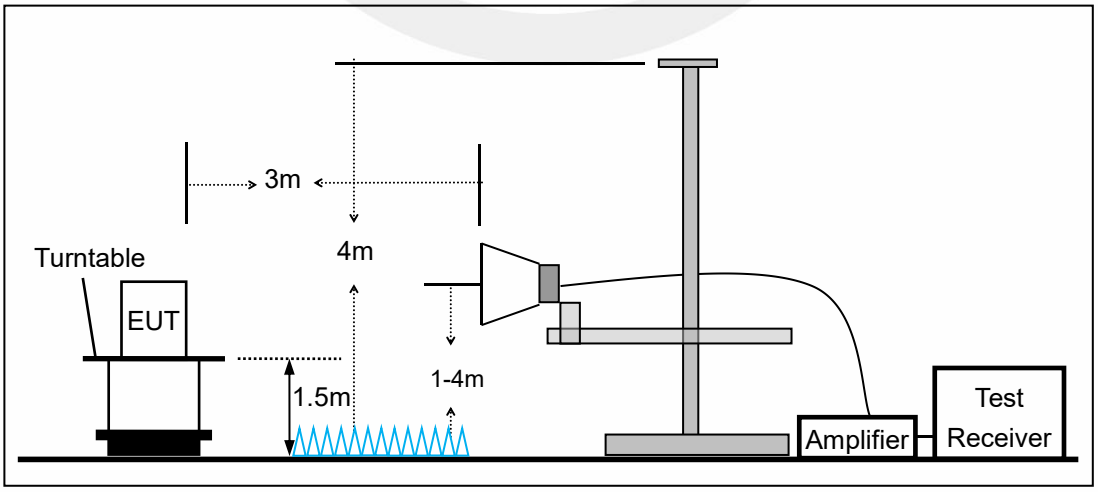

7.3 CONDUCTED EMISSION TEST SETUP

The mains cable of the EUT (maybe per AC/DC Adapter) must be connected to LISN. The LISN shall be placed 0.8 m from the boundary of EUT and bonded to a ground reference plane for LISN mounted on top of the ground reference plane. This distance is between the closest points of the LISN and the EUT. All other units of the EUT and associated equipment shall be at least 0.8m from the LISN.
Ground connections, where required for safety purposes, shall be connected to the reference ground point of the LISN and, where not otherwise provided or specified by the manufacturer, shall be of same length as the mains cable and run parallel to the mains connection at a separation distance of not more than 0.8 m.
According to the requirements in Section 13.1.4.1 of ANSI C63.10-2020 Conducted emissions from the EUT measured in the frequency range between 0.15 MHz and 30 MHz using CISPR Quasi-Peak and average detector mode.

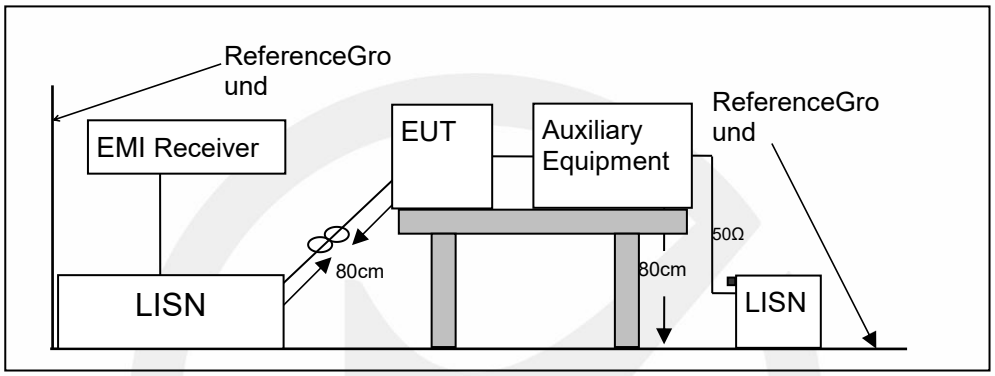

7.4 BLOCK DIAGRAM CONFIGURATION OF TEST SYSTEM

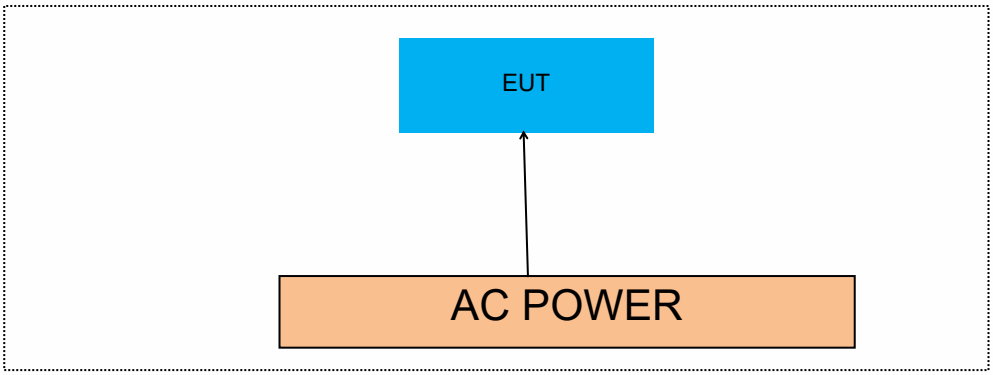

7.5 SUPPORT EQUIPMENT

EUT Cable List and Details			
Cable Description	Length (m)	Shielded/Unshielded	With / Without Ferrite
/	/	/	/

Auxiliary Cable List and Details			
Cable Description	Length (m)	Shielded/Unshielded	With / Without Ferrite
/	/	/	/

Auxiliary Equipment List and Details			
Description	Manufacturer	Model	Serial Number
/	/	/	/

Notes:

1. *All the equipment/cables were placed in the worst-case configuration to maximize the emission during the test.*
2. *Grounding was established in accordance with the manufacturer's requirements and conditions for the intended use.*

8 TEST REQUIREMENTS

8.1 DTS 6DB BANDWIDTH

8.1.1 Applicable Standard

According to FCC Part 15.247(a)(2) and KDB 558074 D01 15.247 Meas Guidance v05r02
According to RSS-247, 5.2(a)

8.1.2 Conformance Limit

The minimum -6 dB bandwidth shall be at least 500 kHz.

8.1.3 Test Configuration

Test according to clause 7.1 radio frequency test setup 1

8.1.4 Test Procedure

The EUT was operating inBluetooth mode and controlled its channel. Printed out the test result from the spectrum by hard copy function.
The RF output of EUT was connected to the spectrum analyzer by RF cable and attenuator. The path loss was compensated to the results for each measurement.
Set to the maximum power setting and enable the EUT transmit continuously
Set RBW = 100 kHz.
Set the video bandwidth (VBW) =300kHz.
Set Span=2 times OBW
Set Detector = Peak.
Set Trace mode = max hold.
Set Sweep = auto couple.
Allow the trace to stabilize.
Measure the maximum width of the emission that is constrained by the frequencies associated with the two outermost amplitude points (upper and lower frequencies) that are attenuated by 6 dB relative to the maximum level measured in the fundamental emission.
Measure and record the results in the test report.

Test Results

Temperature:	25˚C
Relative Humidity:	45%
ATM Pressure:	1011 mbar

Note: N/A

TestMode	Antenna	Frequency[MHz]	DTS BW [MHz]	FL[MHz]	FH[MHz]	Limit[MHz]	Verdict
BLE_1M	Ant1	2402	0.708	2401.624	2402.332	0.5	PASS
BLE_1M	Ant1	2440	0.716	2439.608	2440.324	0.5	PASS
BLE_1M	Ant1	2480	0.716	2479.604	2480.320	0.5	PASS

BLE_1M-Ant1-2402-PASS

BLE_1M-Ant1-2440-PASS

BLE_1M-Ant1-2480-PASS

8.2 DTS 99%BANDWIDTH

8.2.1 Applicable Standard

According to RSS-Gen6.7 and KDB 558074 D01 DTS Meas Guidance v05r02

8.2.2 Test Configuration

Test according to clause 7.1 radio frequency test setup 1

8.2.3 Test Procedure

The EUT was operating inBluetooth mode and controlled its channel. Printed out the test result from the spectrum by hard copy function.
The RF output of EUT was connected to the spectrum analyzer by RF cable and attenuator. The path loss was compensated to the results for each measurement.
Set to the maximum power setting and enable the EUT transmit continuously
Set RBW = 1%-5% OBW(43KHz).
Set the video bandwidth (VBW) =130kHz.
Set Span=4MHz
Set Detector = Peak.
Set Trace mode = max hold.
Set Sweep = auto couple.
Allow the trace to stabilize.
Use the 99 % power bandwidth function of the instrument
Measure the maximum width of the emission.
Measure and record the results in the test report.

8.2.4 Test Results

Temperature:	25˚C
Relative Humidity:	45%
ATM Pressure:	1011 mbar

TestMode	Antenna	Frequency[MHz]	OCB [MHz]	FL[MHz]	FH[MHz]	Limit[MHz]	Verdict
BLE_1M	Ant1	2402	1.0376	2401.4596	2402.4972	---	---
BLE_1M	Ant1	2440	1.0391	2439.4584	2440.4975	---	---
BLE_1M	Ant1	2480	1.0394	2479.4568	2480.4962	---	---

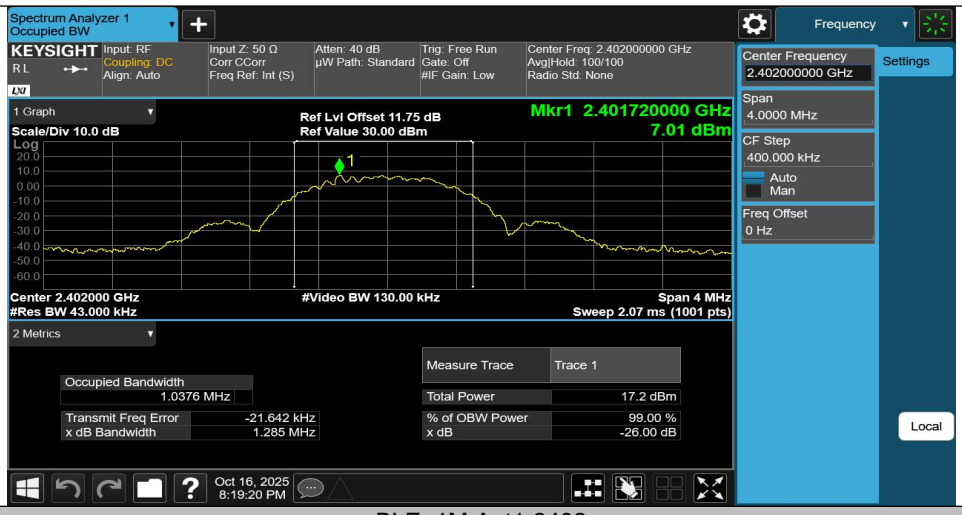

BLE_1M-Ant1-2402

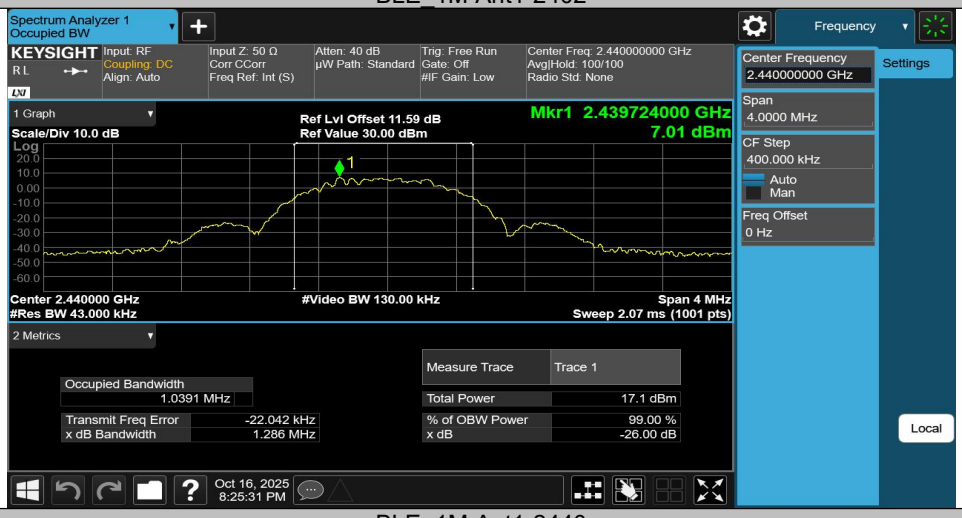

BLE_1M-Ant1-2440

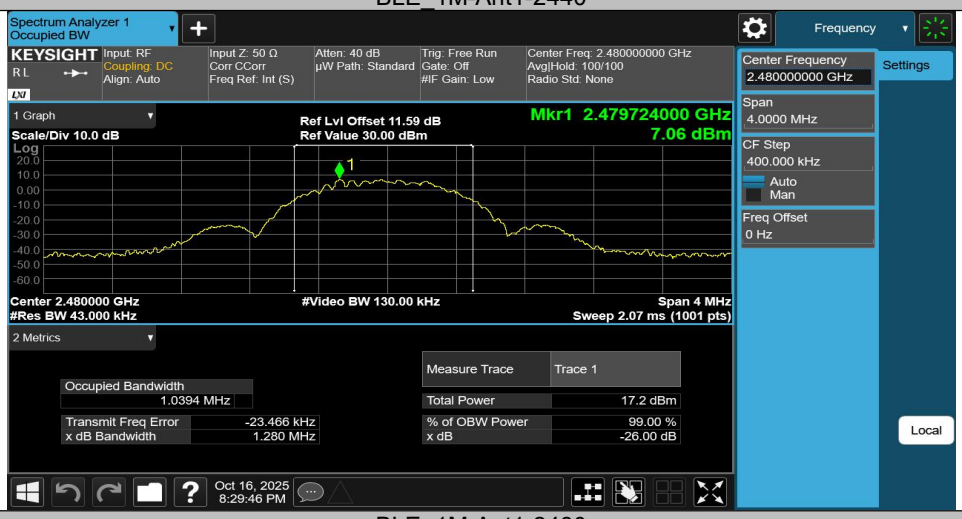

BLE_1M-Ant1-2480

8.3 MAXIMUM PEAK CONDUCTED OUTPUT POWER

8.3.1 Applicable Standard

According to FCC Part 15.247(b)(3) and KDB 558074 D01 15.247 Meas Guidance v05r02
According to RSS-247, 5.4(d) and RSS-Gen6.12

8.3.2 Conformance Limit

The maximum peak conducted output power of the intentional radiator for systems using digital modulation in the 2400 - 2483.5 MHz bands shall not exceed: 1 Watt (30dBm).

8.3.3 Test Configuration

Test according to clause 7.1 radio frequency test setup 1

8.3.4 Test Procedure

As an alternative to a peak power measurement, compliance with the one Watt limit can be based on a measurement of the maximum conducted output power. For smart system, Maximum Conducted Output Power is defined as the total transmit power delivered to all antennas and antenna elements averaged across all symbols in the signaling alphabet when the transmitter is operating at its maximum power control level. Power must be summed across all antennas and antenna elements. If multiple modes of operation are possible (e.g., alternative modulation methods), the maximum conducted output power is the highest total transmit power occurring in any mode.
Set the RBW ≧DTS bandwidth(about 2MHz).
Set VBW =3*RBW(about 6MHz)
Set the span ≧3*RBW
Set Sweep time = auto couple.
Set Detector = peak.
Set Trace mode = max hold.
Allow trace to fully stabilize. Use peak marker function to determine the peak amplitude level.

Conducted output power limit specified in paragraph (b) of this section is based on the use of antennas with directional gains that do not exceed 6 dBi. If transmitting antennas of directional gain greater than 6 dBi are used, the conducted output power from the intentional radiator shall be reduced below the stated values in paragraphs (b)(3) of this section, as appropriate, by the amount in dB that the directional gain of the antenna exceeds 6 dBi.

8.3.5 Test Results

Temperature:	25°C
Relative Humidity:	45%
ATM Pressure:	1011 mbar

TestMode	Antenna	Frequency[MHz]	Conducted Peak Powert[dBm]	Conducted Limit[dBm]	EIRP[dBm]	EIRP Limit[dBm]	Verdict
BLE_1M	Ant1	2402	11.11	≤30	11.11	≤36	PASS
BLE_1M	Ant1	2440	11.09	≤30	11.09	≤36	PASS
BLE_1M	Ant1	2480	11.09	≤30	11.09	≤36	PASS

BLE_1M-Ant1-2402-PASS

BLE_1M-Ant1-2440-PASS

BLE_1M-Ant1-2480-PASS

8.4 MAXIMUM POWER SPECTRAL DENSITY

8.4.1 Applicable Standard

According to FCC Part 15.247(e) and KDB 558074 D01 15.247 Meas Guidance v05r02
According to RSS-247, 5.2(b) and RSS-Gen6.12

8.4.2 Conformance Limit

The transmitter power spectral density conducted from the transmitter to the antenna shall not be greater than 8 dBm in any 3 kHz band during any time interval of continuous transmission.

8.4.3 Test Configuration

Test according to clause 7.1 radio frequency test setup 1

8.4.4 Test Procedure

This procedure shall be used if maximum peak conducted output power was used to demonstrate compliance
The transmitter output (antenna port) was connected to the spectrum analyzer
Set analyzer center frequency to DTS channel center frequency.
Set the span to 1.5 times the DTS bandwidth.
Set the RBW to: 3 kHz
Set the VBW to:10 kHz.
Set Detector = peak.
Set Sweep time = auto couple.
Set Trace mode = max hold.
Allow trace to fully stabilize.
Use the peak marker function to determine the maximum amplitude level within the RBW.

8.4.5 Test Results

Temperature:	25˚C
Relative Humidity:	45%
ATM Pressure:	1011 mbar

TestMode	Antenna	Frequency[MHz]	Result[dBm/3kHz]	Limit[dBm/3kHz]	Verdict
BLE_1M	Ant1	2402	-5.42	≤8.00	PASS
BLE_1M	Ant1	2440	-5.55	≤8.00	PASS
BLE_1M	Ant1	2480	-5.51	≤8.00	PASS

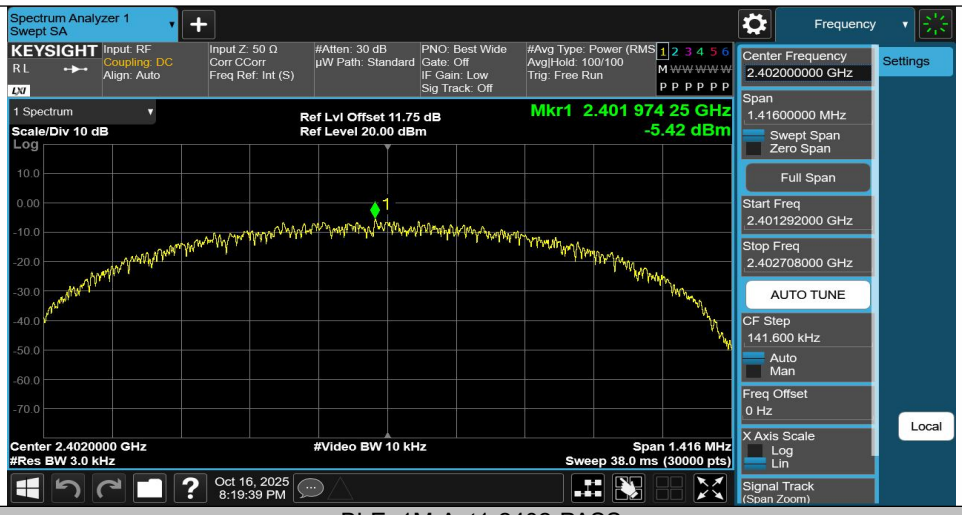

BLE_1M-Ant1-2402-PASS

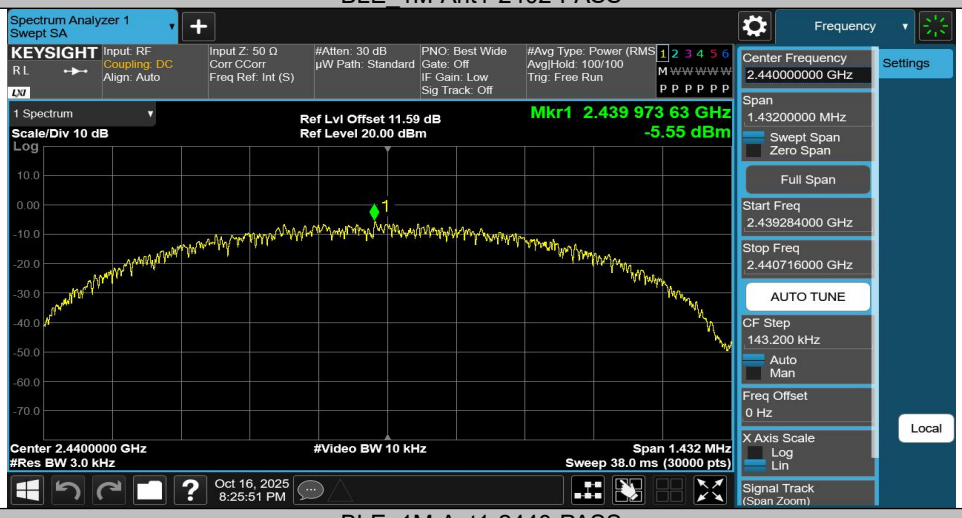

BLE_1M-Ant1-2440-PASS

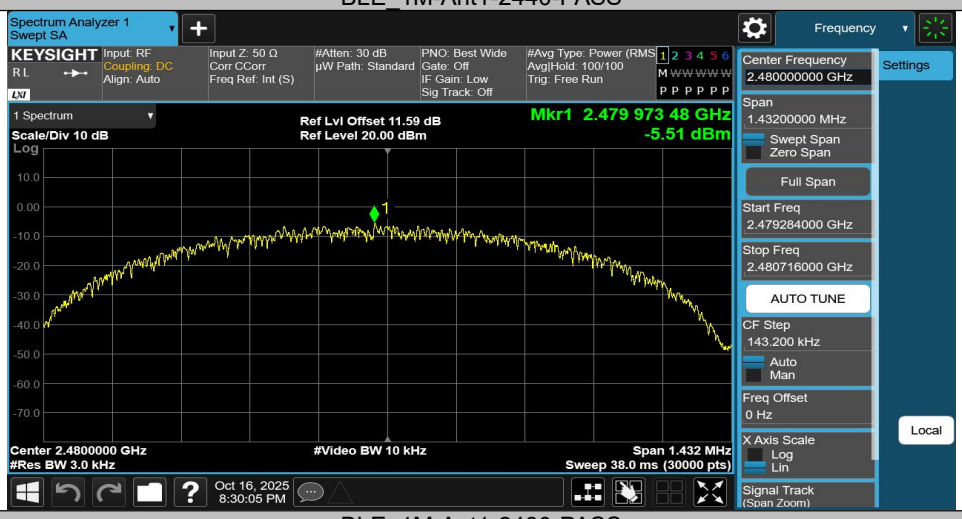

BLE_1M-Ant1-2480-PASS

8.5 UNWANTED EMISSIONS IN NON-RESTRICTED FREQUENCY BANDS

8.5.1 Applicable Standard

According to FCC Part 15.247(d) and KDB 558074 D01 15.247 Meas Guidance v05r02
According to RSS-247, 5.5

8.5.2 Conformance Limit

In any 100 kHz bandwidth outside the frequency band in which the spread spectrum or digitally modulated intentional radiator is operating, the radio frequency power that is produced by the intentional radiator shall be at least 20 dB below that in the 100 kHz bandwidth within the band that contains the highest level of the desired power, based on either an RF conducted or a radiated measurement, provided the transmitter demonstrates compliance with the peak conducted power limits. If the transmitter complies with the conducted power limits based on the use of RMS averaging over a time interval, as permitted under paragraph (b)(3) of this section, the attenuation required under this paragraph shall be 30 dB instead of 20 dB.

8.5.3 Test Configuration

Test according to clause 7.1 radio frequency test setup 1

8.5.4 Test Procedure

The transmitter output (antenna port) was connected to the spectrum analyzer

- **Reference level measurement**

Establish a reference level by using the following procedure:
Set instrument center frequency to DTS channel center frequency.
Set the span to = 1.5 times the DTS bandwidth.
Set the RBW = 100 kHz.
Set the VBW ≥ 3 x RBW.
Set Detector = peak.
Set Sweep time = auto couple.
Set Trace mode = max hold.
Allow trace to fully stabilize.
Use the peak marker function to determine the maximum PSD level.
Note that the channel found to contain the maximum PSD level can be used to establish the reference level.

- **Band-edge measurement**

Use the following spectrum analyzer settings:
Span = wide enough to capture the peak level of the emission operating on the channel closest to the band-edge, as well as any modulation products which fall outside of the authorized band of operation
Set RBW ≥ 1% of the span=100kHz Set VBW ≥3 x RBW
Set Sweep = autoSet Detector function = peakSet Trace = max hold
Allow the trace to stabilize. Set the marker on the emission at the bandedge, or on the highest modulation product outside of the band, if this level is greater than that at the bandedge. Enable the marker-delta function, then use the marker-to-peak function to move the marker to the peak of the in-band emission. The marker-delta value now displayed must comply with the limit specified in this Section.

- **Emission level measurement**

Set the center frequency and span to encompass frequency range to be measured.
Set the RBW = 100 kHz.
Set the VBW =300 kHz.
Set Detector = peak
Sweep time = auto couple.
Trace mode = max hold.
Allow trace to fully stabilize.

Use the peak marker function to determine the maximum amplitude level.
Ensure that the amplitude of all unwanted emissions outside of the authorized frequency band (excluding restricted frequency bands) are attenuated by at least the minimum requirements . Report the three highest emissions relative to the limit.

8.5.5 Test Results

Temperature:	25 ˚C
Relative Humidity:	45%
ATM Pressure:	1011 mbar

Note: N/A

Reference level measurement

TestMode	Antenna	Freq(MHz)	Max.Point[MHz]	Result[dBm]
BLE_1M	Ant1	2402	2402.23	9.97
BLE_1M	Ant1	2440	2440.22	9.94
BLE_1M	Ant1	2480	2480.22	9.92

Band edge measurements

TestMode	Antenna	ChName	Frequency[MHz]	RefLevel[dBm]	Result[dBm]	Limit[dBm]	Verdict
BLE_1M	Ant1	Low	2402	9.97	-39.36	≤-10.03	PASS
BLE_1M	Ant1	High	2480	9.92	-42.88	≤-10.08	PASS

Emission level measurement

TestMode	Antenna	Frequency[MHz]	FreqRange [MHz]	RefLevel [dBm]	Result[dBm]	Limit[dBm]	Verdict
BLE_1M	Ant1	2402	30~1000	9.97	-59.54	≤-10.03	PASS
BLE_1M	Ant1	2402	1000~26500	9.97	-48.43	≤-10.03	PASS
BLE_1M	Ant1	2440	30~1000	9.94	-60.93	≤-10.06	PASS
BLE_1M	Ant1	2440	1000~26500	9.94	-49.28	≤-10.06	PASS
BLE_1M	Ant1	2480	30~1000	9.92	-60.66	≤-10.08	PASS
BLE_1M	Ant1	2480	1000~26500	9.92	-44.32	≤-10.08	PASS

Reference level measurement

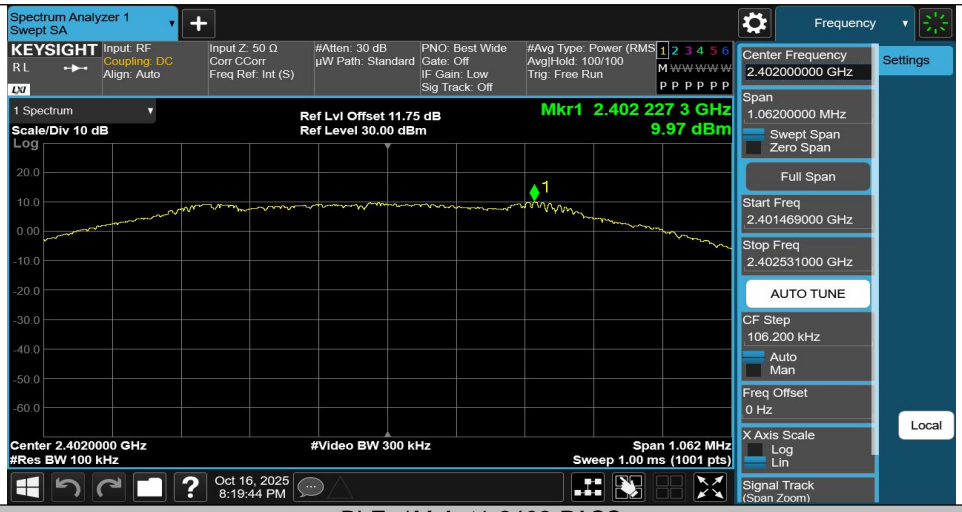

BLE_1M-Ant1-2402-PASS

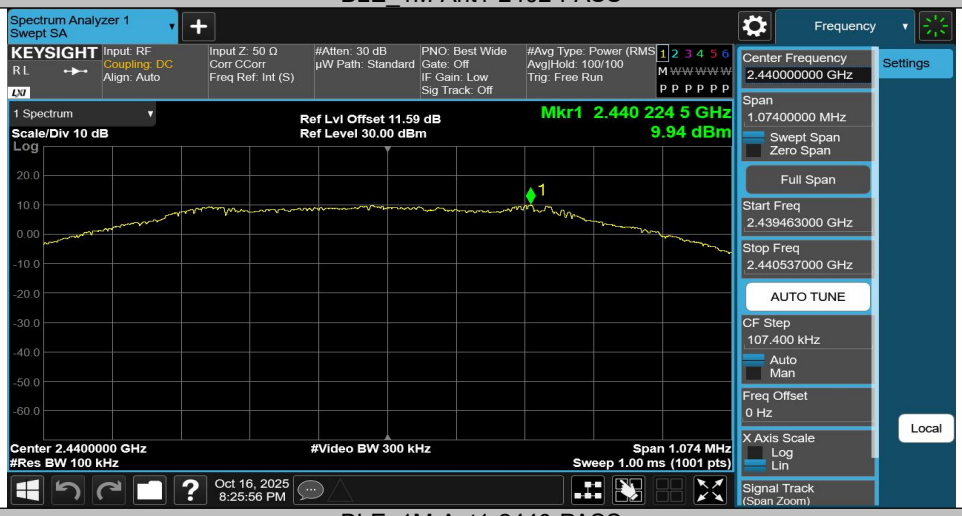

BLE_1M-Ant1-2440-PASS

BLE_1M-Ant1-2480-PASS

Band edge measurements

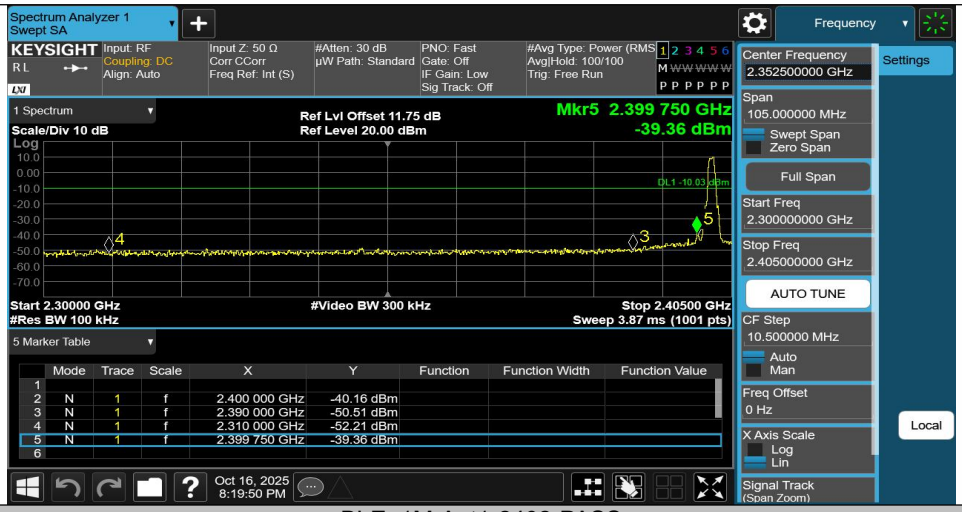

BLE_1M-Ant1-2402-PASS

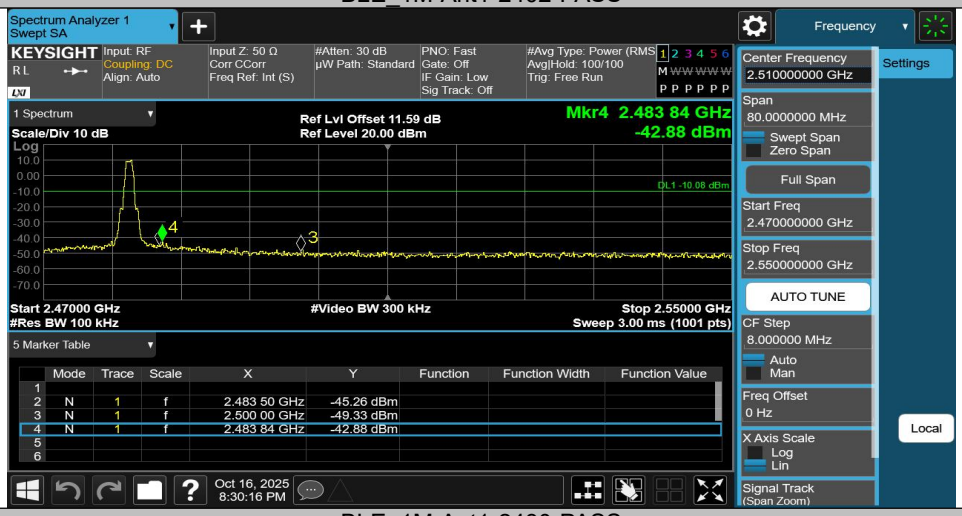

BLE_1M-Ant1-2480-PASS

Emission level measurement

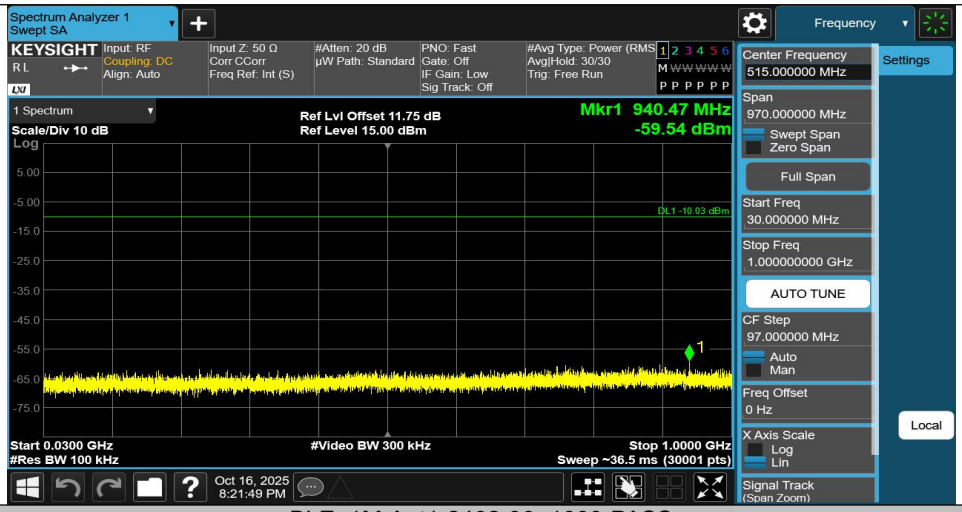

BLE_1M-Ant1-2402-30~1000-PASS

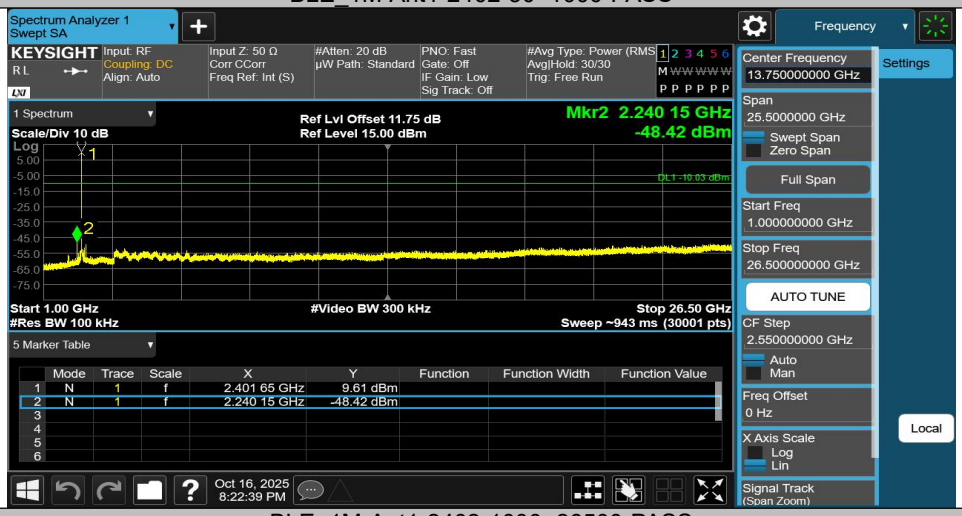

BLE_1M-Ant1-2402-1000~26500-PASS

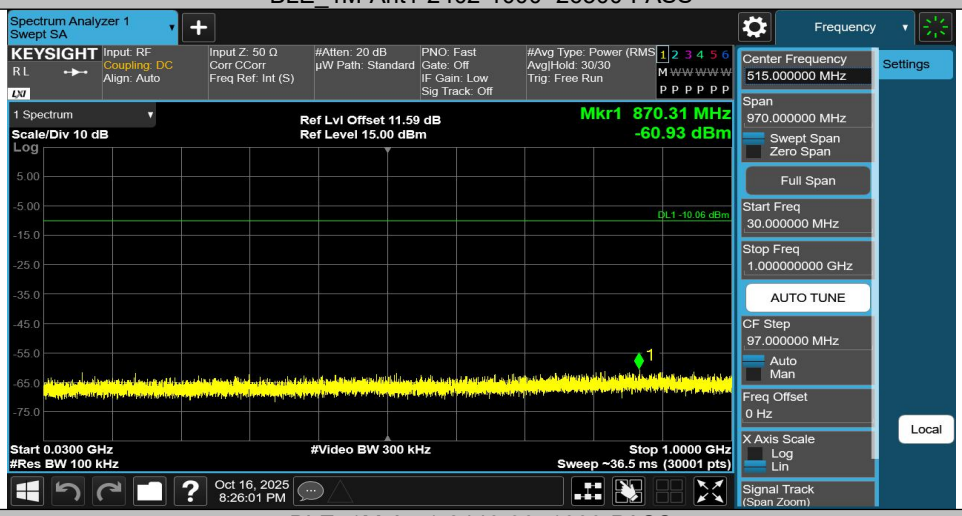

BLE_1M-Ant1-2440-30~1000-PASS

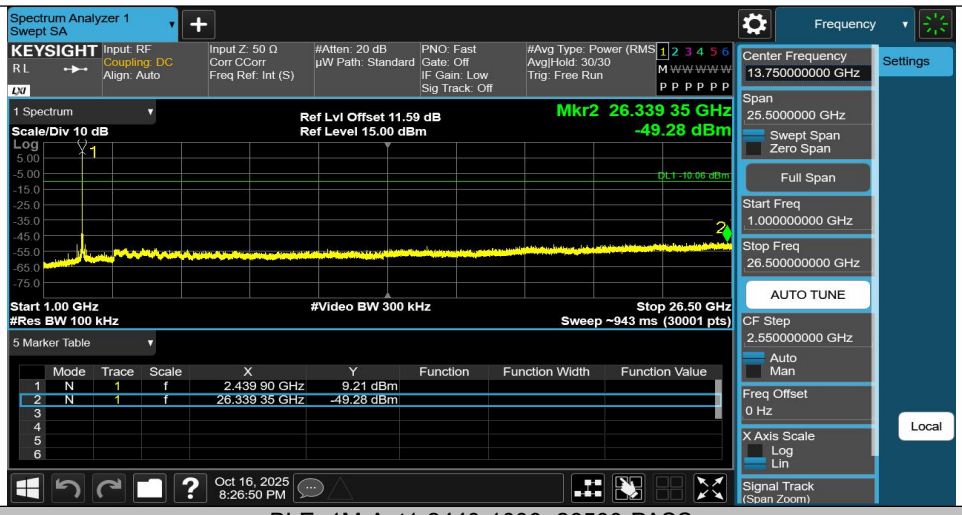

BLE_1M-Ant1-2440-1000~26500-PASS

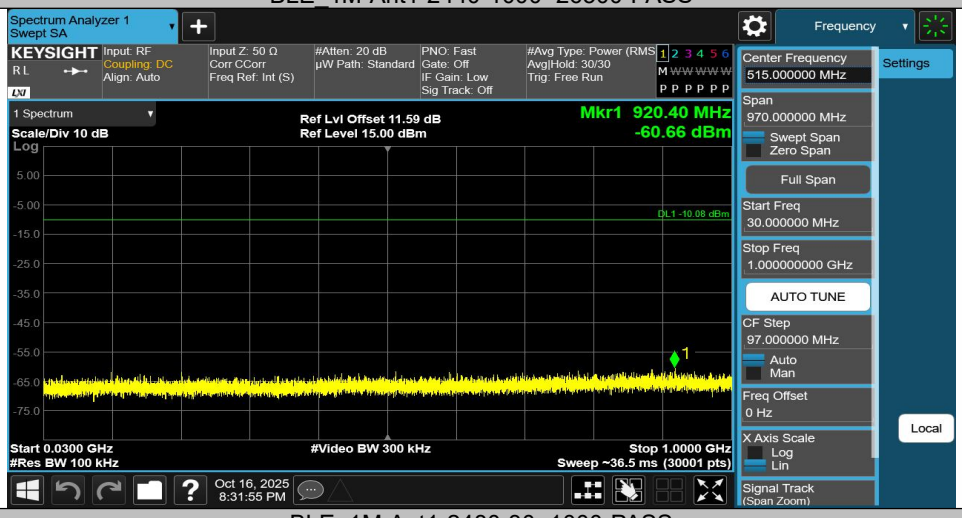

BLE_1M-Ant1-2480-30~1000-PASS

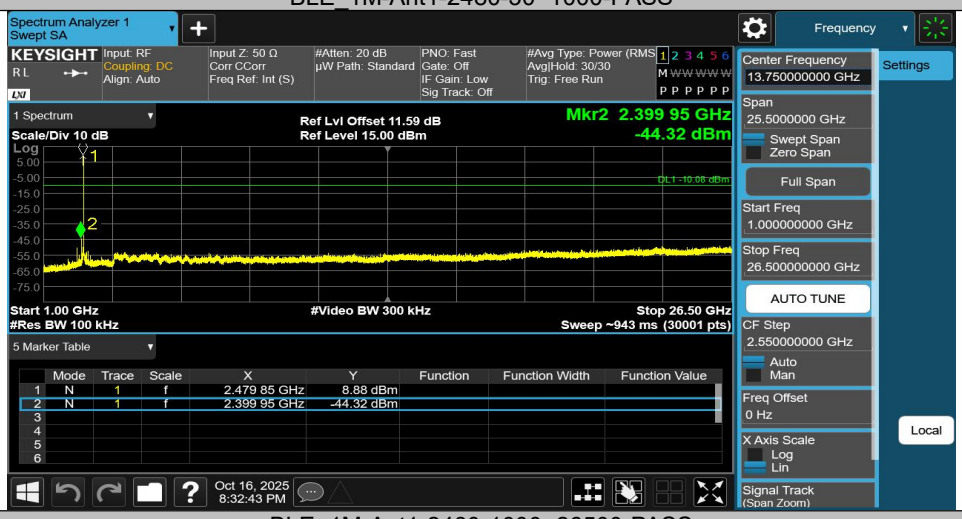

BLE_1M-Ant1-2480-1000~26500-PASS

8.6 RADIATED SPURIOUS EMISSION

8.6.1 Applicable Standard

According to FCC Part 15.247(d),15.205, 15.209 and KDB 558074 D01 15.247 Meas Guidancev05r02
According to IC RSS-Gen and RSS-247

8.6.2 Conformance Limit

According to FCC Part 15.247(d): radiated emissions which fall in the restricted bands, as defined in §15.205(a), must also comply with the radiated emission limits specified in §15.209(a) (see §15.205(c)).
According to FCC Part15.205, Restricted bands

MHz	MHz	MHz	GHz
0.090-0.110	16.42-16.423	399.9-410	4.5-5.15
10.495-0.505	16.69475-16.69525	608-614	5.35-5.46
2.1735-2.1905	16.80425-16.80475	960-1240	7.25-7.75
4.125-4.128	25.5-25.67	1300-1427	8.025-8.5
4.17725-4.17775	37.5-38.25	1435-1626.5	9.0-9.2
4.20725-4.20775	73-74.6	1645.5-1646.5	9.3-9.5
6.215-6.218	74.8-75.2	1660-1710	10.6-12.7
6.26775-6.26825	123-138	2200-2300	14.47-14.5
8.291-8.294	149.9-150.05	2310-2390	15.35-16.2
8.362-8.366	156.52475-156.52525	2483.5-2500	17.7-21.4
8.37625-8.38675	156.7-156.9	2690-2900	22.01-23.12
8.41425-8.41475	162.0125-167.17	3260-3267	23.6-24.0
12.29-12.293	167.72-173.2	3332-3339	31.2-31.8
12.51975-12.52025	240-285	3345.8-3358	36.43-36.5
12.57675-12.57725	322-335.4	3600-4400	(2)
13.36-13.41			

According to FCC Part15.205,the level of any transmitter spurious emission in Restricted bands shall not exceed the level of the emission specified in the following table

Restricted Frequency(MHz)	Field Strength (μV/m)	Field Strength (dBμV/m)	Measurement Distance
0.009-0.490	2400/F(KHz)	20 log (uV/m)	300
0.490-1.705	24000/F(KHz)	20 log (uV/m)	30
1.705-30	30	29.5	30
30-88	100	40	3
88-216	150	43.5	3
216-960	200	46	3
Above 960	500	54	3

8.6.3 Test Configuration

Test according to clause 7.2 radio frequency test setup 2

8.6.4 Test Procedure

This test is required for any spurious emission that falls in a Restricted Band, as defined in Section 15.205. It must be performed with the highest gain of each type of antenna proposed for use with the EUT. Use the following spectrum analyzer settings:
The EUT was placed on a turn table which is 0.8m above ground plane.
Maximum procedure was performed on the highest emissions to ensure EUT compliance.
Span = wide enough to fully capture the emission being measured
RBW = 1 MHz for f ≥ 1 GHz(1GHz to 25GHz), 100 kHz for f < 1 GHz(30MHz to 1GHz)
VBW ≥ RBW

Sweep = auto
Detector function = peak
Trace = max hold
Follow the guidelines in ANSI C63.10-2020 with respect to maximizing the emission by rotating the EUT, measuring the emission while the EUT is situated in three orthogonal planes (if appropriate), adjusting the measurement antenna height and polarization, etc. A pre-amp and a high pass filter are required for this test, in order to provide the measuring system with sufficient sensitivity. Allow the trace to stabilize. The peak reading of the emission, after being corrected by the antenna factor, cable loss, pre-amp gain, etc., is the peak field strength, which must comply with the limit specified in Section 15.35(b). Submit this data.
Now set the VBW to 10 Hz, while maintaining all of the other instrument settings. This peak level, once corrected, must comply with the limit specified in Section 15.209. If the dwell time per channel of the hopping signal is less than 100 ms, then the reading obtained with the 10 Hz VBW may be further adjusted by a “duty cycle correction factor”, derived from 20log(dwell time/100 ms), in an effort to demonstrate compliance with the 15.209 limit. Submit this data.
Repeat above procedures until all frequency measured was complete.

8.6.5 Test Results

Temperature:	24° C
Relative Humidity:	70%
ATM Pressure:	1011 mbar

■ Spurious Emission below 30MHz(9KHz to 30MHz)

Freq. (MHz)	Ant.Pol.	Emission Level(dBuV/m)		Limit 3m(dBuV/m)		Over(dB)	
	H/V	PK	AV	PK	AV	PK	AV
--	--	--	--	--	--	--	--

Note: the amplitude of spurious emission that is attenuated by more than 20dB below the permissible limit has no need to be reported.
Distance extrapolation factor =40log(Specific distance/ test distance)(dB);
Limit line=Specific limits(dBuV) + distance extrapolation factor

■ Spurious Emission Above 1GHz(1GHz to 25GHz)

All the antenna(Antenna 1) and modes(BLE 1M, BLE 2M) mode have been tested, and the worst(Antenna 1,BLE_1M) result recorded was report as below:

Test mode: BLE_1M Frequency: Channel 0: 2402MHz

Freq. (MHz)	Ant.Pol.	Emission Level(dBuV/m)		Limit 3m(dBuV/m)		Over(dB)	
	H/V	PK	AV	PK	AV	PK	AV
4804.500	V	36.70	21.85	74.00	54.00	37.3	32.15
7206.500	V	41.58	26.75	74.00	54.00	32.42	27.25
17896.50	V	51.46	36.67	74.00	54.00	22.54	17.33
4804.500	H	35.58	20.72	74.00	54.00	38.42	33.28
7206.500	H	42.94	28.11	74.00	54.00	31.06	25.89
17924.50	H	53.37	38.58	74.00	54.00	20.63	15.42

Test mode: BLE_1M Frequency: Channel 19: 2440MHz

Freq. (MHz)	Ant.Pol.	Emission Level(dBuV/m)		Limit 3m(dBuV/m)		Over(dB)	
	H/V	PK	AV	PK	AV	PK	AV
4880.500	V	37.04	22.19	74.00	54.00	36.96	31.81
7320.500	V	41.75	26.91	74.00	54.00	32.25	27.09
17874.50	V	51.08	36.27	74.00	54.00	22.92	17.73
4880.500	H	37.56	22.71	74.00	54.00	36.44	31.29
7320.500	H	43.07	28.24	74.00	54.00	30.93	25.76
17939.00	H	51.41	36.62	74.00	54.00	22.59	17.38

Test mode: BLE_1M Frequency: Channel 39: 2480MHz

Freq. (MHz)	Ant.Pol.	Emission Level(dBuV/m)		Limit 3m(dBuV/m)		Over(dB)	
	H/V	PK	AV	PK	AV	PK	AV
4960.500	V	36.53	21.68	74.00	54.00	37.47	32.32
7440.500	V	40.58	25.74	74.00	54.00	33.42	28.26
17978.50	V	51.33	36.59	74.00	54.00	22.67	17.41
4960.500	H	37.24	22.39	74.00	54.00	36.76	31.61
7440.500	H	41.90	27.07	74.00	54.00	32.1	26.93
17920.50	H	51.72	36.93	74.00	54.00	22.28	17.07

Note: (1) All Readings are Peak Value (VBW=3MHz) and Average Value (VBW=10Hz).
(2) Emission Level= Reading Level+Correct Factor.
(3) Correct Factor= Ant_F + Cab_L– Preamp
(4) The reading of emissions are attenuated more than 20dB below the permissible limits or the field strength is too small to be measured.

■ Spurious Emission in Restricted Band 2310-2390MHz and 2483.5-2500MHz

All the antenna(Antenna 1) and modes(BLE 1M, BLE 2M) mode have been tested, and the worst(Antenna 1,BLE_1M) result recorded was report as below:

Test mode:	BLE_1M	Frequency:	Channel 0: 2402MHz

Frequency (MHz)	Polarity	PK(dBuV/m) (VBW=3MHz)	Limit 3m (dBuV/m)	AV(dBuV/m) (VBW=10Hz)	Limit 3m (dBuV/m)
2390.00	H	58.00	74.00	43.12	54.00
2390.00	V	57.63	74.00	42.75	54.00

Test mode:	BLE_1M	Frequency:	Channel 39: 2480MHz

Frequency (MHz)	Polarity	PK(dBuV/m) (VBW=3MHz)	Limit 3m (dBuV/m)	AV(dBuV/m) (VBW=10Hz)	Limit 3m (dBuV/m)
2483.50	H	58.22	74.00	43.34	54.00
2483.50	V	57.90	74.00	43.02	54.00

Note:
(1) All Readings are Peak Value (VBW=3MHz) and Average Value (VBW=10Hz).
(2) Emission Level= Reading Level+Correct Factor.
(3) Correct Factor= Ant_F + Cab_L - Preamp
(4) The reading of emissions are attenuated more than 20dB below the permissible limits or the field strength is too small to be measured.

■ Spurious Emission below 1GHz(30MHz to 1GHz)

All the antenna(Antenna 1) and modes(BLE 1M) mode have been tested, and the worst(Antenna 1,BLE_1M) for 2402 MHz result recorded was report as below:

Mode:	BLE 2402MHz

No.	Frequency (MHz)	Reading (dBuV/m)	Factor (dB)	Level (dBuV/m)	Limit (dBuV/m)	Margin (dB)	Det.	Antenna	Height (cm)
1	59.1702	60.44	-28.59	31.85	40.00	-8.15	QP	Vertical	80
2	65.9184	65.02	-28.31	36.71	40.00	-3.29	QP	Vertical	80
3 *	70.8564	64.54	-27.68	36.86	40.00	-3.14	QP	Vertical	80
4	74.0053	62.27	-27.02	35.25	40.00	-4.75	QP	Vertical	80
5	84.1985	61.87	-28.09	33.78	40.00	-6.22	QP	Vertical	80
6	182.8796	60.96	-27.38	33.58	43.50	-9.92	QP	Vertical	80

Mode:	BLE 2402MHz

No.	Frequency (MHz)	Reading (dBuV/m)	Factor (dB)	Level (dBuV/m)	Limit (dBuV/m)	Margin (dB)	Det.	Antenna	Height (cm)
1	55.5704	53.57	-27.64	25.93	40.00	-14.07	QP	Horizontal	80
2	66.1037	53.97	-28.31	25.66	40.00	-14.34	QP	Horizontal	80
3	70.2132	52.44	-27.80	24.64	40.00	-15.36	QP	Horizontal	80
4	203.5228	55.04	-26.00	29.04	43.50	-14.46	QP	Horizontal	80
5	302.7994	57.63	-24.28	33.35	46.00	-12.65	QP	Horizontal	80
6 *	338.7563	57.81	-23.44	34.37	46.00	-11.63	QP	Horizontal	80

8.7 CONDUCTED EMISSIONS TEST

8.7.1 Applicable Standard

According to FCC Part 15.207(a)
According to IC RSS-Gen 8.8

8.7.2 Conformance Limit

Conducted Emission Limit

Frequency(MHz)	Quasi-peak	Average
0.15-0.5	66-56	56-46
0.5-5.0	56	46
5.0-30.0	60	50

Note: 1. The lower limit shall apply at the transition frequencies
2. The limit decreases in line with the logarithm of the frequency in the range of 0.15 to 0.50MHz.

8.7.3 Test Configuration

Test according to clause 7.3 conducted emission test setup

8.7.4 Test Procedure

The EUT was placed on a table which is 0.8m above ground plane.
Maximum procedure was performed on the highest emissions to ensure EUT compliance.
Repeat above procedures until all frequency measured were complete.

8.7.5 Test Results

N/A
Note：This device is powered by DC and does not support AC power supply.

8.8 ANTENNA APPLICATION

8.8.1 Antenna Requirement

Standard	Requirement
FCC CRF Part15.203	An intentional radiator shall be designed to ensure that no antenna other than that furnished by the responsible party shall be used with the device. The use of a permanently attached antenna or of an antenna that uses a unique coupling to the intentional radiator shall be considered sufficient to comply with the provisions of this section. The manufacturer may design the unit so that a broken antenna can be replaced by the user, but the use of a standard antenna jack or electrical connector is prohibited.
FCC 47 CFR Part 15.247 (b)	If transmitting antennas of directional gain greater than 6dBi are used, the power shall be reduced by the amount in dB that the directional gain of the antenna exceeds 6dBi.
RSS-Gen Section 6.8	The applicant for equipment certification shall provide a list of all antenna types that may be used with the transmitter, where applicable (i.e. for transmitters with detachable antenna), indicating the maximum permissible antenna gain (in dBi) and the required impedance for each antenna. The test report shall demonstrate the compliance of the transmitter with the limit for maximum equivalent isotropically radiated power (e.i.r.p.) specified in the applicable RSS, when the transmitter is equipped with any antenna type, selected from this list.
RSS-247 Section 5.4	If the transmitter employs an antenna system that emits multiple directional beams, but does not emit multiple directional beams simultaneously, the total output power conducted to the array or arrays that comprise the device (i.e. the sum of the power supplied to all antennas, antenna elements, staves, etc., and summed across all carriers or frequency channels) shall not exceed the applicable output power limit. However, the total conducted output power shall be reduced by 1 dB below the specified limits for each 3 dB that the directional gain of the antenna/antenna array exceeds 6 dBi. The directional antenna gain shall be computed as the sum of 10 log (number of array elements or staves) plus the directional gain of the element or stave having the highest gain.

8.8.2 Result

PASS.

Note:
- ☑ Antenna use a permanently attached antenna which is not replaceable.
- ☐ Not using a standard antenna jack or electrical connector for antenna replacement
- ☐ The antenna has to be professionally installed (please provide method of installation)

Please refer to the attached documentInternal Photos to show the antenna connector.

--------- END OF REPORT --------