# Mirobot Robot

# Users Manual

# 2AVLB-MIROBOTF1

Beijing Tsinew Technologies Co.,Ltd.

**Beijing Tsinew Technologies Co.,Ltd. 2019. All rights reserved.**

Without the written permission of the company, no unit or individual is allowed to extract or copy part or all of the contents of this document. And shall not be transmitted in any form.

**Exemption from declaration**

To the maximum extent permitted by law, the products described in this manual (including its hardware, software, firmware, etc. Informal writing) are provided "by the status quo," and may have defects, errors or faults. Qinniu Chuangzhi does not provide any form of express or implied warranties, including but not limited to the warranties of merchantability, quality satisfaction, fitness for a specific purpose, noninfringement of the rights of third parties, etc. Informal writing ; nor Compensation for any special, incidental, incidental or indirect damages caused by the use of this manual or the use of our products.

Before using this product, read this user manual and relevant technical documents published on the Internet in detail and understand relevant information to ensure the robot arm is used on the premise of fully understanding the robot and its related knowledge. Qinniu Chuangzhi recommends that you use this manual under the guidance of professionals. All safety information contained in this manual shall not be regarded as the guarantee of Mirobot. Even if the manual and relevant instructions are followed, the hazards or losses caused in the use process may still occur.

It is the responsibility of the users of this product to ensure that the applicable laws and regulations of the relevant countries are followed and that there are no significant risks in the use of Qinniu Chuangzhi manipulator.

Beijing Tsinew Technologies Co.,Ltd.

Address:

Website:

# Preface

## Objective

This manual introduces the functions, technical specifications, installation instructions, system debugging, etc. Informal writing of the Mirobot manipulator, which is convenient users understand and use the Mirobot manipulator.

## Readers

This manual applies to:

- Customer Engineer
- Sales Engineer
- Installation and commissioning engineer
- Technical support engineer

Revised records

| time | Modification record |
|---|---|
| | |
| | |

Symbolic conventions

The following symbols may appear in this manual, and their meanings are as follows.

| Symbol | Explain |
|---|---|
| | Indicates a high potential hazard which, if not avoided, could result in personnel death or severe injury. |
| | Indicates a moderate or low potential hazard, if not avoided, may cause slight personal injury, manipulator damage, etc. Informal writing |
| | This indicates that there is a potential risk, which may lead to arm damage, data loss ,or unpredictable results. |
| | Representation is the additional information of the text and the emphasis and supplement to the book. |

# 1. Safety precautions

This chapter introduces the safety precautions when using this product. Please read this manual carefully before using the manipulator for the first time. This product should be used in an environment that meets the requirements. Do not modify the product without authorization. Otherwise, it may cause product failure, even personal injury, electric shock, fire, etc. Informal writing. The installation, operation, teaching, programming ,and system development personnel of the manipulator must first read the manual carefully and use the robot in strict accordance with the specifications of the manual.

## 1.1 General Safety

Danger

the manipulator belongs to live equipment. Nonprofessionals are not allowed to change the circuit at will. Otherwise, it is easy to cause injury to the equipment or personal.

When using the manipulator, the following safety rules shall be followed:

- When operating the manipulator, the local laws and regulations shall be strictly observed. The safety precautions described in the manual are only as a supplement to local safety regulations.
- To engage the "danger," "warning," and "precautions" described in the manual are only used as supplementary instructions for all safety precautions.
- To engage, please use the manipulator within the specified environment. If the manipulator is used beyond the specification and load conditions, the product will be shortened the service life even damages the equipment.
- To engage the personnel responsible for the installation, operation ,and maintenance of the Mirobot manipulator must first receive strict training, understand various safety precautions, and master the correct operation and maintenance methods before operating and maintaining the robot.
- To engage high corrosive cleaning is not suitable for the cleaning of manipulator, and anodized parts are not suitable for immersion cleaning.
- To engage, it is not allowed to repair the faulty products or dismantle the manipulator without professional training. If the products fail, please contact Mirobot technical support engineer in time.
- If the product is scrapped, please correctly dispose of industrial waste in accordance with relevant laws and protect the environment.
- To engage the packing box of the manipulator contains small parts. Do not let children play, to prevent swallowing.
- During the use of children, someone must be on the side to monitor, and the equipment shall be shut down in time when the operation is completed.
- In the process of robot movement, please do not extend your hand into the movement range of the manipulator, be careful of bumping and pinching.
- It is strictly prohibited to change or remove and modify the nameplate, description, icon ,and mark of the manipulator and related equipment.

- During the handling and installation, please be careful, and pay attention to handle with care according to the instructions on the packing box, and place it correctly according to the direction of setting up the robot. Otherwise, it is easy to damage the machine.
- Before operating the manipulator, please refer to the user manual attached to the box.

## 1.2 Precautions

- Do not place your fingers in the gap between the upper and lower arms during operation. Prevent pinching.
- If the coordinate reading of the manipulator is abnormal during use, please press the reset button on the back of the base.
- Each time the mechanical arm is powered on again, it must first press the RESET button in the Mirobot Studio to reset. The user must wait for the reset action to be completed before the control operation can be carried out.
- Please disconnect or connect external devices, such as Bluetooth, WiFi, handle ,and infrared, when the manipulator is completely powered off sensor kit, color sensor kit, etc. Informal writing. Otherwise, it is easy to damage the machine.
- When using laser engraving, please wear protective glasses. Do not shine on your eyes and clothes.

# 2. Quick start

This chapter briefly introduces how to control Mirobot through Mirobot Studio, so that users can quickly understand and use Mirobot, and its process is shown in Figure 2.1.

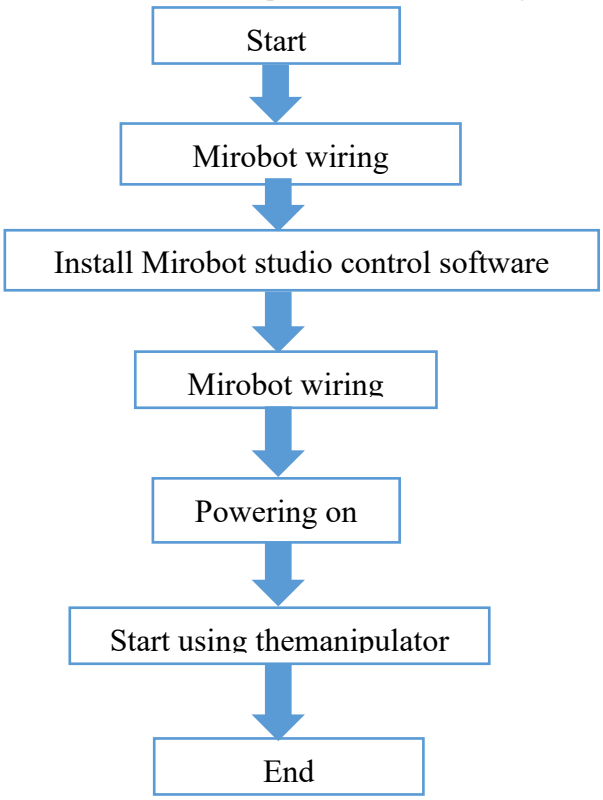


Figure 2.1 quick start flow chart of Mirobot manipulator

## 2.1 Manipulator cable connection

(1) Use USB data cable to connect the manipulator and computer. As shown in Figure

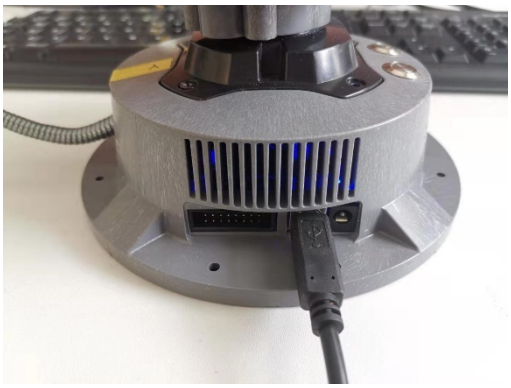

Figure 2.2 connecting the robot arm to the computer

(2) Connect the power supply to the robot arm, as shown in Figure 2.3.

Figure 2.3 connecting the manipulator to the power supply

## 2.2 Install Mirobot Studio control software

It can be used to control the manipulator by using the software Mirobot Studio of the upper computer of Mirobot, and realize the functions of axis motion control, Cartesian coordinate motion control, one key calibration of the manipulator, drawing of the manipulator, etc. Informal writing

### 2.2.1 System environment requirements

The Mirobot Studio control software supports the following operating systems:

- Windows 7，Windows 8，Windows 10
- macOS 10.10， macOS 10.11， macOS 10.12

### 2.2.2 Get the control software package of Mirobot Studio

Before using Mirobot, download the Mirobot Studio package based on the windows operating system.

### 2.2.3 Install the Mirobot Studio control software package

1. The Mirobot Studio software package can be directly decompressed and used. As shown in Figure 2.4, double-click to open the extracted tool.exe file.

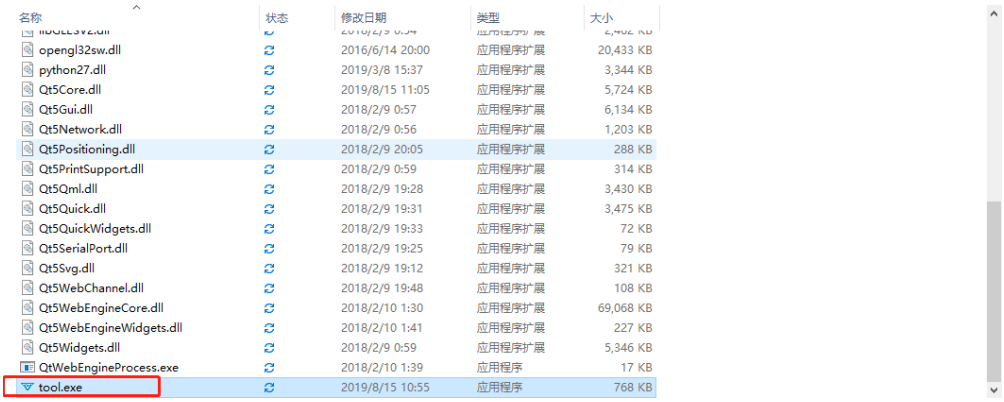

| 名称 | 状态 | 修改日期 | 类型 | 大小 |
|---|---|---|---|---|
| opengl32sw.dll | | 2016/6/14 20:00 | 应用程序扩展 | 20,433 KB |
| python27.dll | | 2019/3/8 15:37 | 应用程序扩展 | 3,344 KB |
| Qt5Core.dll | | 2019/8/15 11:05 | 应用程序扩展 | 5,724 KB |
| Qt5Gui.dll | | 2018/2/9 0:57 | 应用程序扩展 | 6,134 KB |
| Qt5Network.dll | | 2018/2/9 0:56 | 应用程序扩展 | 1,203 KB |
| Qt5Positioning.dll | | 2018/2/9 20:05 | 应用程序扩展 | 288 KB |
| Qt5PrintSupport.dll | | 2018/2/9 0:59 | 应用程序扩展 | 314 KB |
| Qt5Qml.dll | | 2018/2/9 19:28 | 应用程序扩展 | 3,430 KB |
| Qt5Quick.dll | | 2018/2/9 19:31 | 应用程序扩展 | 3,475 KB |
| Qt5QuickWidgets.dll | | 2018/2/9 19:33 | 应用程序扩展 | 72 KB |
| Qt5SerialPort.dll | | 2018/2/9 19:25 | 应用程序扩展 | 79 KB |
| Qt5Svg.dll | | 2018/2/9 19:12 | 应用程序扩展 | 321 KB |
| Qt5WebChannel.dll | | 2018/2/9 19:48 | 应用程序扩展 | 108 KB |
| Qt5WebEngineCore.dll | | 2018/2/10 1:30 | 应用程序扩展 | 69,068 KB |
| Qt5WebEngineWidgets.dll | | 2018/2/10 1:41 | 应用程序扩展 | 227 KB |
| Qt5Widgets.dll | | 2018/2/9 0:59 | 应用程序扩展 | 5,346 KB |
| QtWebEngineProcess.exe | | 2018/2/10 1:39 | 应用程序 | 17 KB |
| tool.exe | | 2019/8/15 10:55 | 应用程序 | 768 KB |

Figure 2.4 opening the tool.exe file

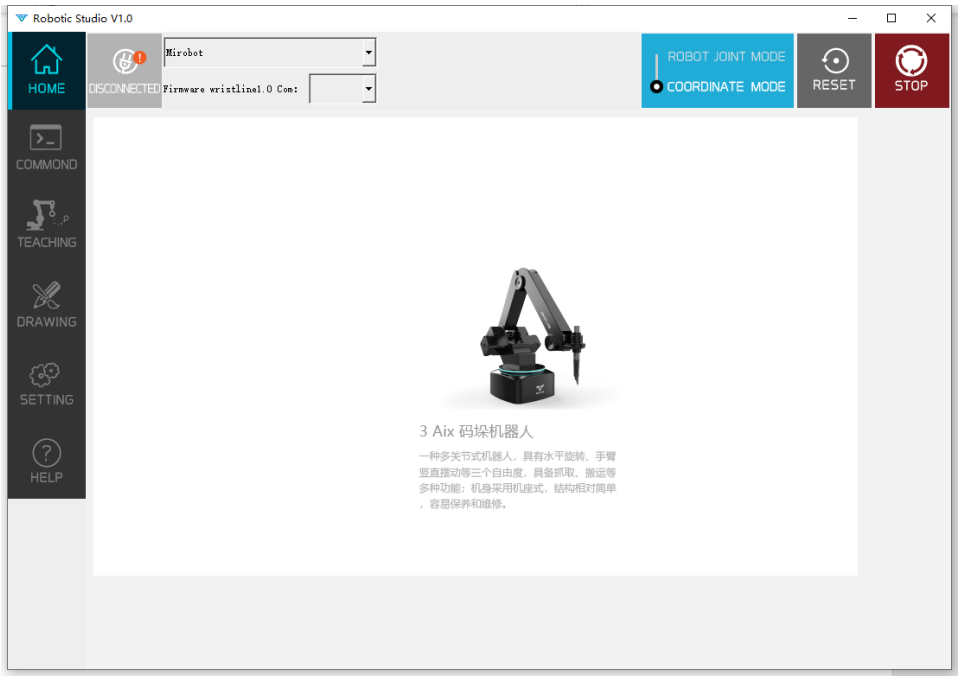


Figure 2.5 Mirobot Studio interface after opening

2. Install driver

Download the driver installation package from the link: https://sparks.gogo.co.nz/ch340.html. Double click to open the Mirobot driver, as shown in Figure 2.6.

Figure 2.6 device driver installation wizard interface

Click "Install" to install the driver. The interface shown in Figure 2.7 will pop up after success. Click OK.

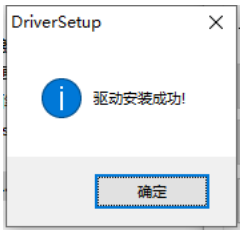


Figure 2.7 driver installed successfully

### 2.2.4 Verification after installation of Mirobot Studio

1.Verify the Mirobot Studio Software

After the installation, double-click to open the tool.exe file in the Mirobot Studio package. If the Mirobot Studio software can be opened correctly, it means that the Mirobot Studio software is running normally.

2.Verifying the Mirobot driver

(1) Connect the Mirobot manipulator to the computer through the USB data cable.

(2) Open the device manager window. If "USB-serial ch340 (COM4)" can be found in "port (COM and LPT)," it means that the driver is installed successfully, and the port number after com may be different. As shown in Figure 2.8.

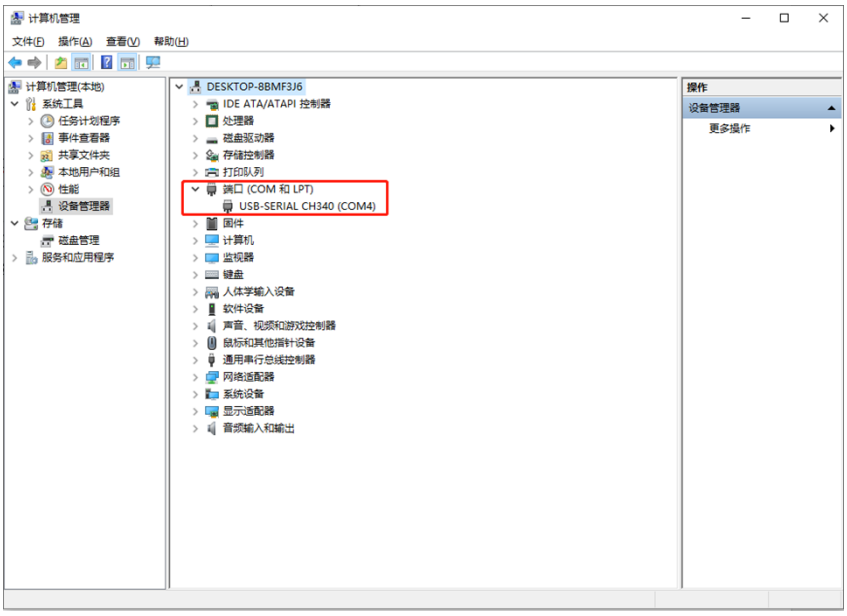


Figure 2.8 serial port drive information ofmanipulator

(3) Open the Mirobot Studio software. Click the Setting tab, as shown in Figure 2.9.

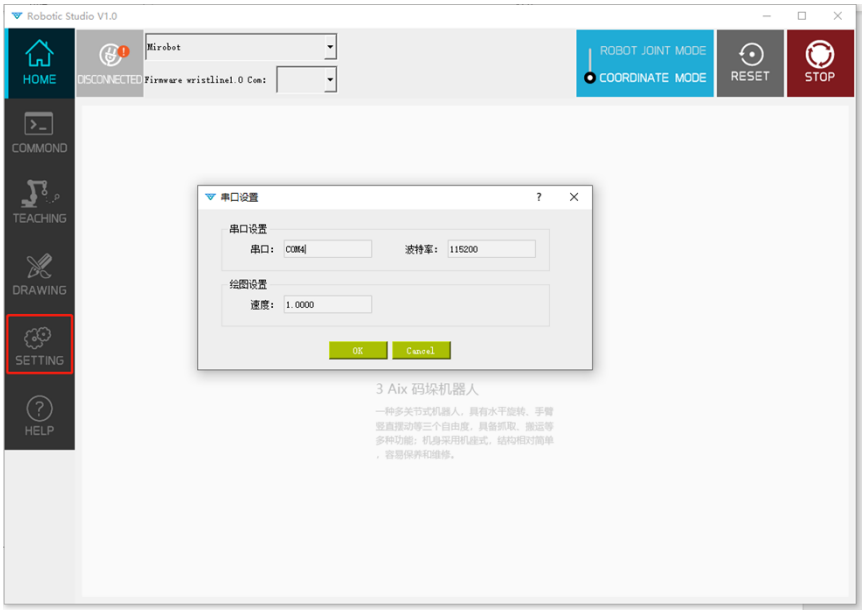


Figure 2.9 Setting tab of Mirobot Studio Software

Set the serial port to the com number seen in step (2), here is COM4, and then click OK. As shown in Figure 2.10.

Figure 2.10 setting a serial port number on Setting tab

(4) At this time, the upper left corner of the Mirobot Studio software displays the green connection success flag. At this time, you can start to use the Mirobot Studio software to control the manipulator. As shown in Figure 2.11.

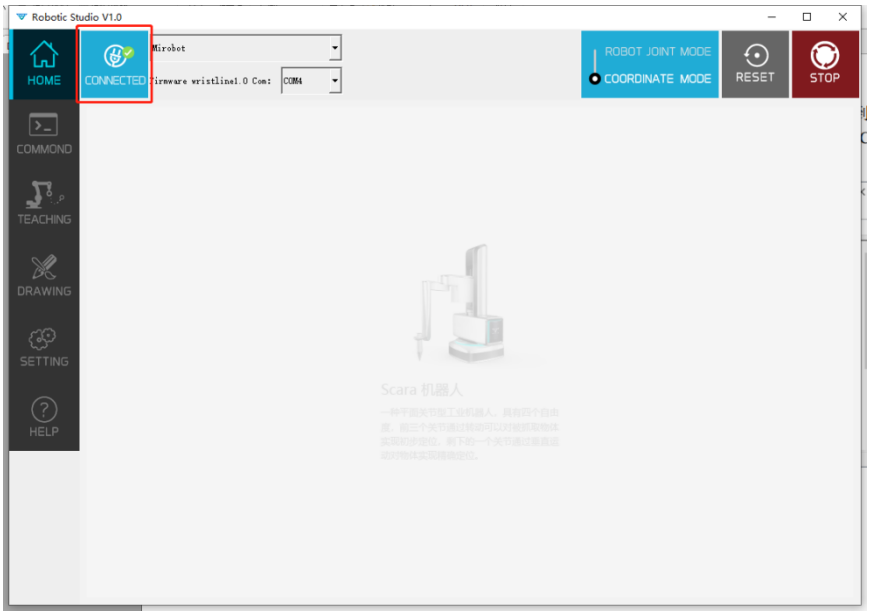


Figure 2.11 Successful connection between Mirobot Studio software and manipulator

## 2.3 Startup and shutdown

Power on: press the switch button on the side of the base of the Mirobot manipulator by hand to turn on the power of the Mirobot manipulator. The power indicator on the button will light up, as shown in Figure 2.12.

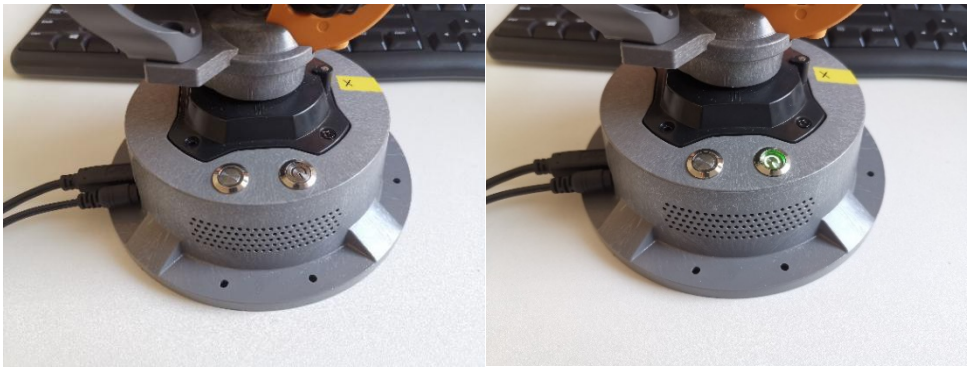

Figure 2.12 switch on the robot arm

**Be careful**

Do not turn Mirotbot's 1st and 5th axes by hand as Mirotbot may be damaged.

- Switch off: press the switch button on the side of the base of the robot arm again to turn off the power of the robot arm. The power indicator on the button will turn off.

## 2.4 Start using the manipulator

This chapter describes the essential control operation of the robot arm using the software Mirobot Studio.

**Prerequisite**

The Mirobot Studio software has been installed. For details, please refer to the 2.2 installations of Mirobot Studio control software.

the manipulator has been correctly connected to the computer, and the power supply of the manipulator has been turned on. Refer to 2.3 startups and shutdown for detailed operation

**Operation steps**

1. Double click tool.exe in the Mirobot Studio package. Pop up the Mirobot Studio interface, and then follow the steps of Verifying the Mirobot driver to verify the Mirobot driver to set the serial port connection between the Mirobot Studio and the manipulator. After the connection is completed, the green checkmark should be displayed on the connected icon in the upper left corner of the Mirobot Studio, which indicates that the Mirobot Studio and the manipulator have been correctly connected, as shown in Figure 2.13.

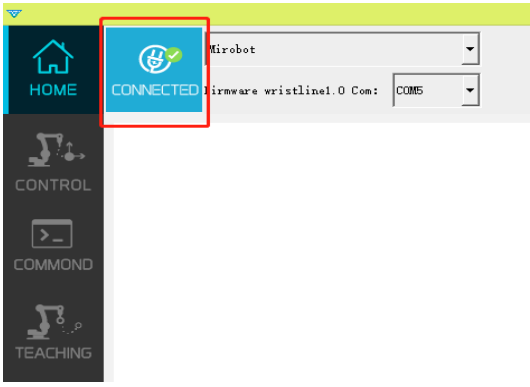


Figure 2.13 the Mirobot Studio and the robot arm are properly connected

2. Before any control operation on the manipulator, the manipulator must be reset. Click the reset button in Mirobot Studio, as shown in Figure 2.14. Then wait for the manipulator to be reset. Figure 2.15 shows the manipulator during the reset process, and figure 2.16 shows the manipulator after the normal reset.

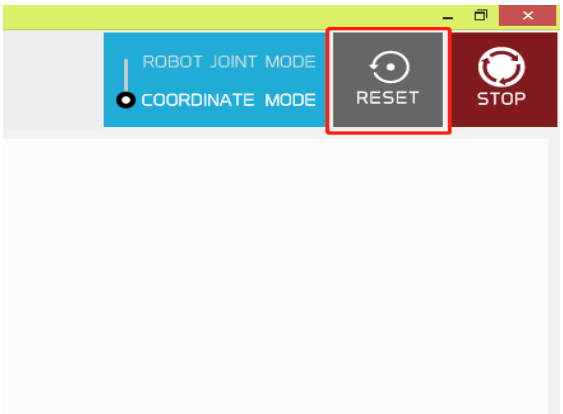


Figure 2.14 The reset button of manipulator

Figure 2.15 Resetting the arm in progress

Figure 2.16 The manipulator after normal reset

**Be careful**

The Mirobot manipulator must be reset first after each power failure or re power up.

3. In case of any illegal operation of the manipulator, you can click the stop button in the Mirobot Studio for emergency stop operation, as shown in Figure 2.17.

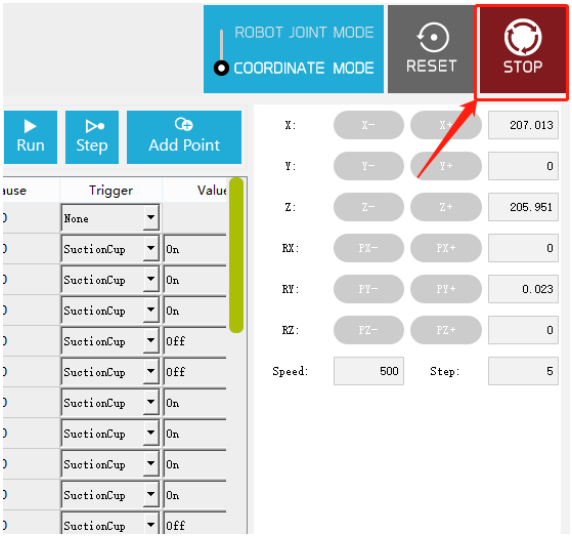


Figure 2.17 stop button in Mirobot Studio

After the emergency stop operation, if it is necessary to continue using the manipulator, press the entity reset button next to the power button on the manipulator base, as shown in Figure 2.18.

Figure 2.18 reset button on the base of the manipulator

**Be careful**

After the emergency stop operation of the Mirobot manipulator, it is also necessary to perform the reset operation in the Mirobot Studio again.

4.Using the axis motion control function of Mirobot

(1) Click the command tab, as shown in Figure 2.19.

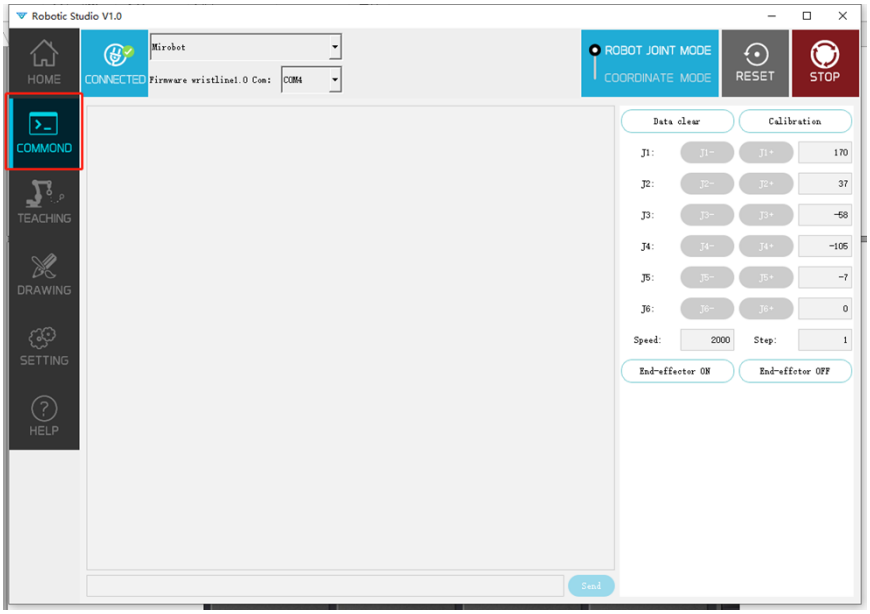


Figure 2.19 command tab

(2)Select joint motion mode at the control mode selection in Mirobot Studio, as shown in Figure 2.20.

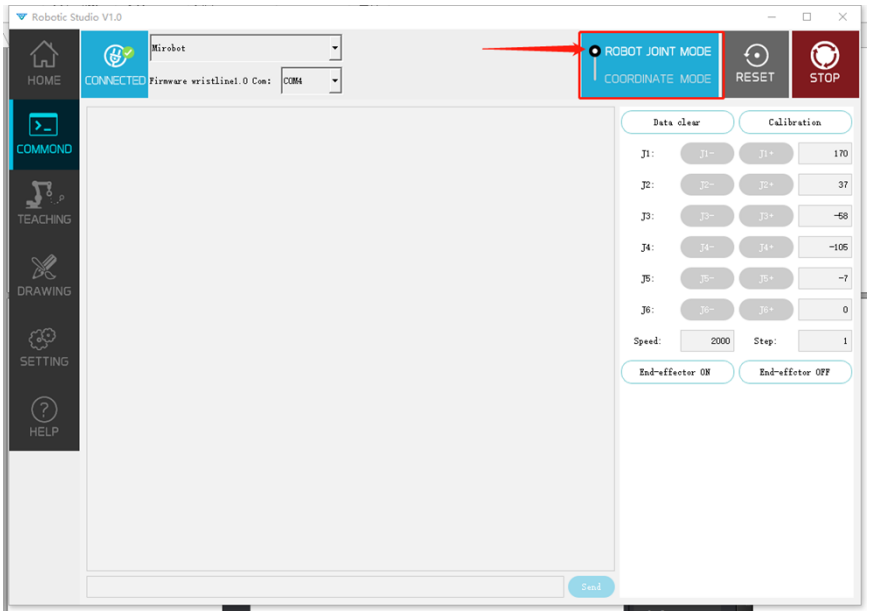


Figure 2.20 joint motion mode selection

(3) Click the single-axis motion control button on the right side of the Mirobot Studio to control the six joints of the manipulator to move separately. The speed can be adjusted at speed, and the step can be adjusted at step. As shown in Figure 2.21.

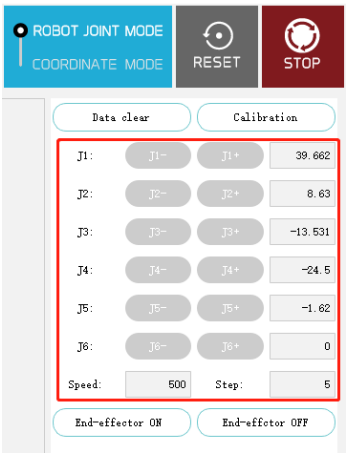


Figure 2.21 Mirobot Studio joint controls

5. using the Cartesian space motion control function of Mirobot

(1) Click the command tab, as shown in Figure 2.19.

(2) Select Cartesian space motion mode at the control mode selection in Mirobot Studio, as shown in Figure 2.22.

Figure 2.22 Cartesian spatial motion mode selection

(3) Click the control button on the right side of Mirobot Studio to control the spatial position and attitude (XYZ coordinate and RPY angle) of the end actuator of the manipulator. The speed can be adjusted at speed, and the step can be adjusted at step. As shown in Figure 2.23.

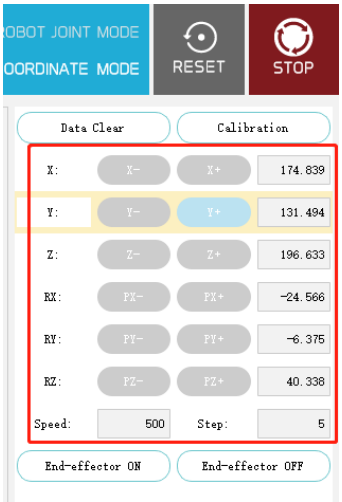


Figure 2.23 Mirobot Studio position and attitude control buttons

6.Use the teaching recurrence function of Mirobot

(1) Click the teaching tab, as shown in Figure 2.24.

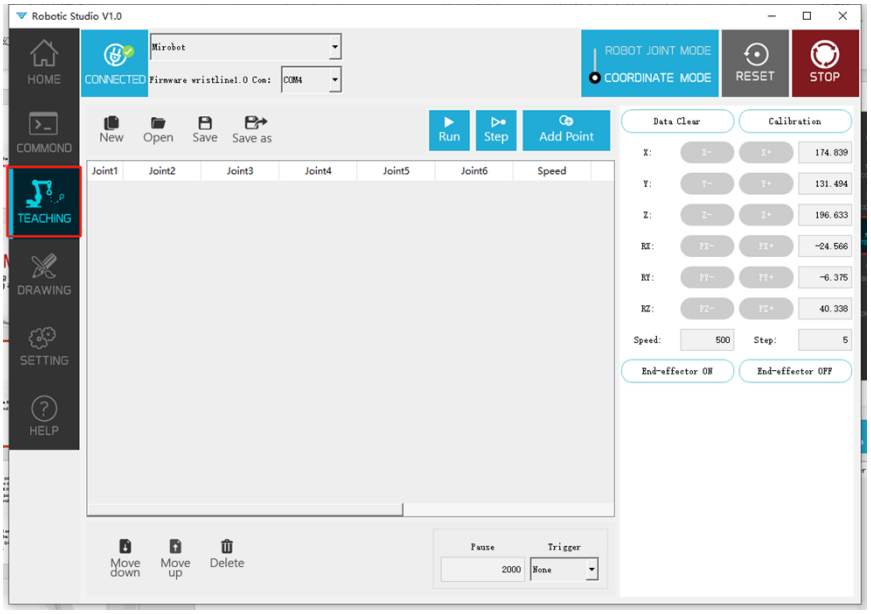


Figure 2.24 teaching tab

(2) Click the control button on the right side of Mirobot Studio to control the spatial position and attitude (XYZ coordinate and RPY angle) of the actuator at the end of the manipulator. When adjusting to a satisfactory teaching position point, click the "add point" button to add a teaching point, as shown in Figure 2.25.

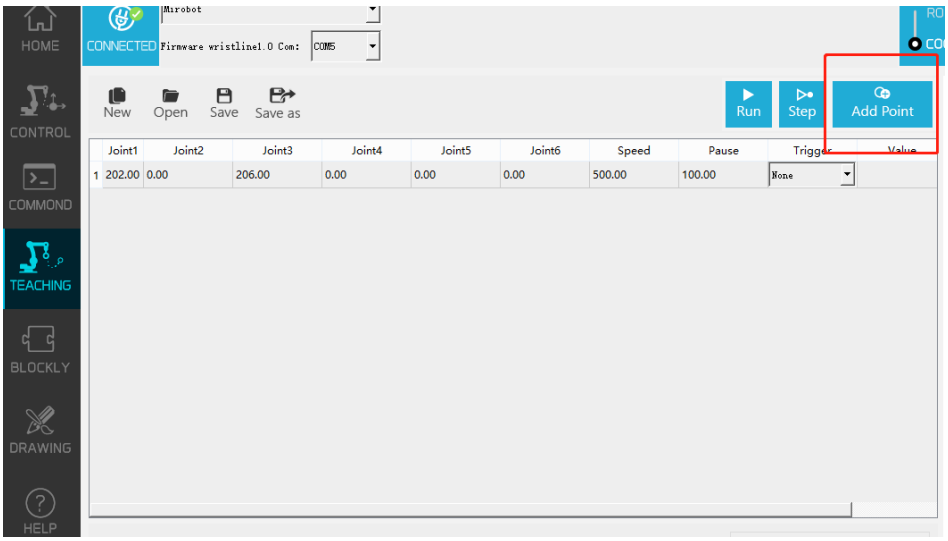


Figure 2.25 add teaching point button

Then continue to adjust the position and posture of the manipulator, continue to click the "add point" button, and add the second teaching point and the third teaching point... Until all teaching points are added.

(3) Click the "run" button in the Mirobot Studio panel to realize the continuous recurrence of the recorded teaching points. Click the step button in the panel to realize the single-step movement of the recorded teaching point. As shown in Figure 2.26.

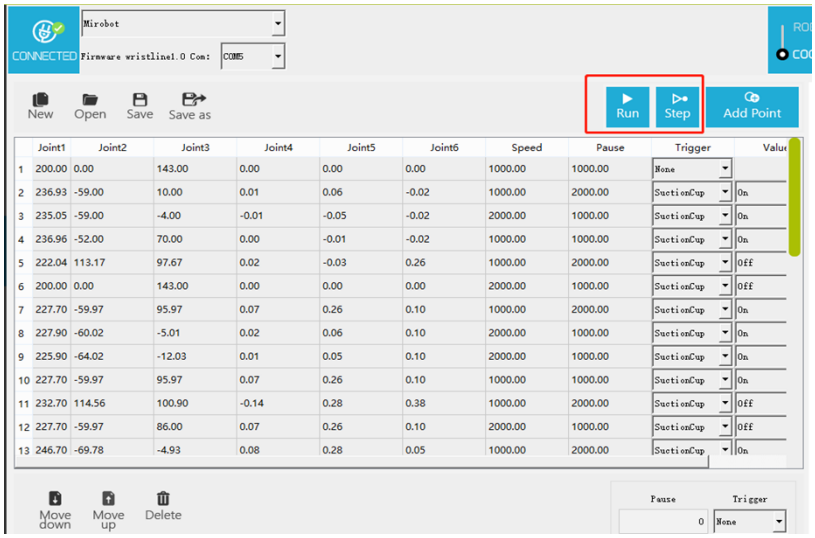


Figure 2.26 continuous and single-step repeat buttons of teaching points

# 3. Product introduction

## 3.1 Overview

Mirobot is a desktop level 6-DOFmanipulator, which supports functions such as teaching reproduction, graphical programming, writing and painting, laser carving, etc. Informal writing compared with similar products, its end position and posture can be controlled. At the same time, it also has a rich I / O extension interface, which can connect different end actuators, and can be used by users for subsequent development.

## 3.2 Product appearance and composition

Mirobot is composed of a base, six rotating joints, a giant arm, a small arm, an end tool, etc. Informal writing its appearance is shown in Figure 3.1.

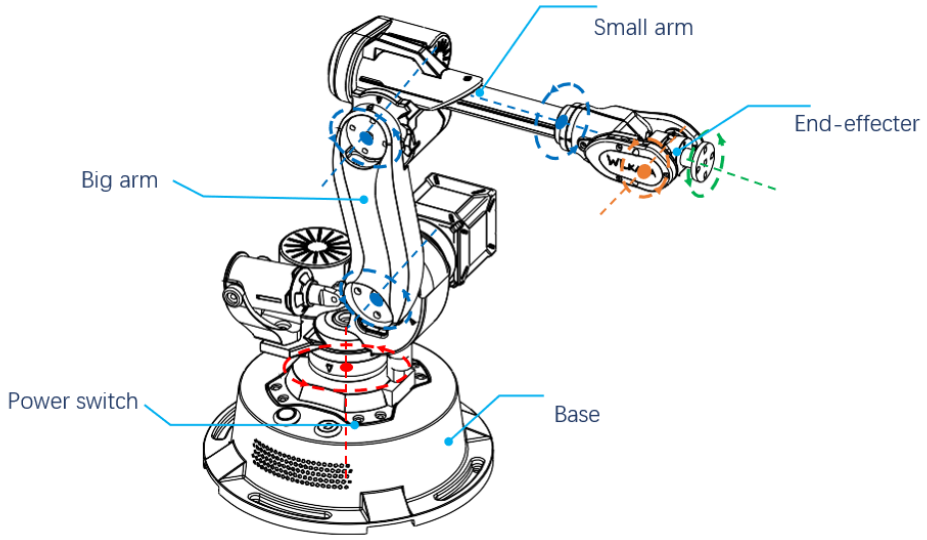


Figure 3.1 appearance of Mirobot

## 3.3 Working principle and specification

This chapter mainly describes the working space, working principle, size ,and key technical specifications of Mirobot.

### 3.3.1 Working space

Mirobot's workspace is shown in Figure 3.2.

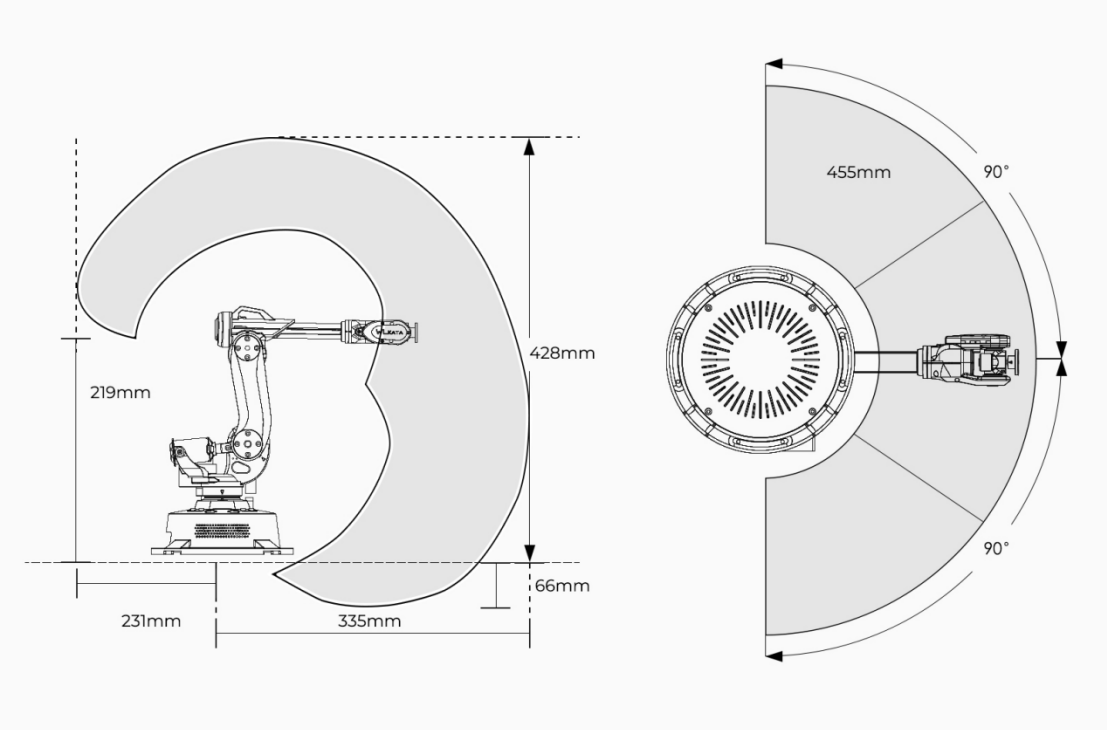


Figure 3.2 Mirobot's workspace

### 3.3.2 Coordinate system

Mirobot's six joint coordinate systems and Cartesian space coordinate systems are shown in Figure 3.3 and Figure 3.4 , respectively.

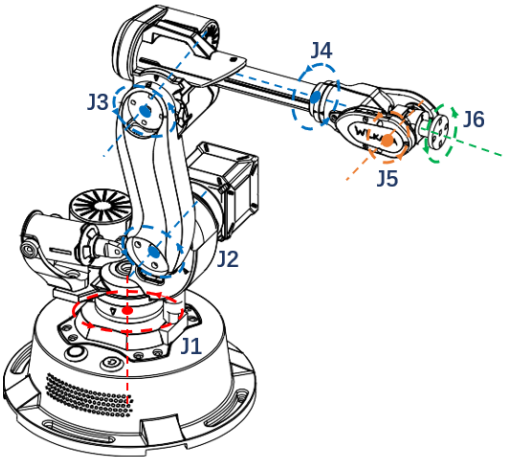


Figure 3.3 joint coordinate system

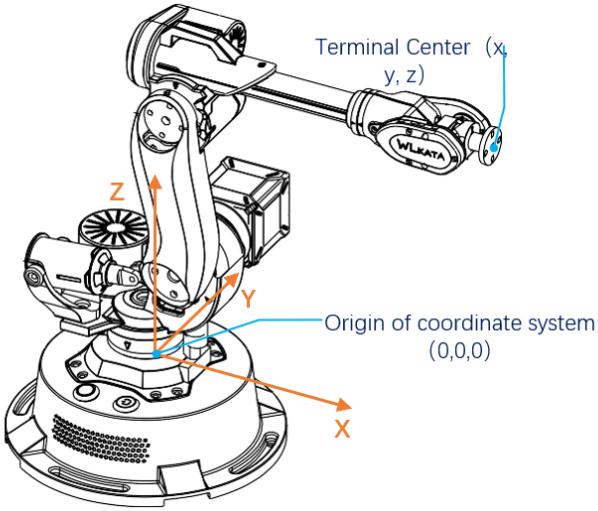


Figure 3.4 Cartesian coordinate system

Joint coordinate system: the coordinate system determined by reference to each moving joint.

Milobot has six joints: j1j2 J3 J4 J5 J6, all of which are rotary joints. The positive rotation direction of each joint follows the right-hand rule and the thumb points to the opposite direction of the output shaft of each shaft motor.

Cartesian coordinate system: The coordinate system is determined by reference to the base of the manipulator.

The origin of the coordinate system is the center of the base platform.

The x-axis direction is perpendicular to the fixed base forward.

The y-axis direction is perpendicular to the fixed base to the left.

### 3.3.3 Sports function

The motion modes of Mirobot manipulator include joint motion mode and a Cartesian motion mode.

1. joint movement mode

Joint motion mode means that each joint of the manipulator is controlled separately. You can click the joint motion button to move a single joint.

- Joint coordinate system mode:

- Click "J1 +" and "J1 -" to control the positive and negative rotation of the base motor.
- Click "J2 +" and "J2 -" to control the positive and negative rotation of boom motor.
- Click "J3 +" and "J3 -" to control the positive and negative movement of jib motor.
- Click "J4 +" and "J4 -" to control the positive and negative rotation of the fourth axis at the end.
- Click "J5 +" and "J5 -" to control the positive and negative rotation of the fifth axis at the end.
- Click "J6 +" and "J6 -" to control the positive and negative rotation of the sixth axis at the end.

2.Cartesian motion mode

The Cartesian motion mode of the manipulator controls the position and attitude of the end actuator. You can click the coordinate and RPY angle motion buttons to change the position and attitude of the end actuator.

- Cartesian coordinate system mode:
  - Click "x +" and "X -" to control the manipulator to move along the positive and negative direction of the X-axis.
  - Click "Y +" and "Y -" to control the manipulator to move along the positive and negative direction of the Y-axis.
  - Click "Z +" and "Z -" to control the manipulator to move along the positive and negative direction of the Z-axis.
  - Click "PX +" and "PX -" and the end posture of the manipulator rotates along the X-axis.
  - Click "py +" and "py -" to rotate the end posture of the manipulator along the Y-axis.
  - Click "PZ +" and "PZ -" and the end posture of the manipulator rotates along the Z-axis.

**Be careful**

Cartesian motion mode supports point-to-point motion mode and linear interpolation motion mode. Please refer to Mirobot communication instructions for specific modes.

## 3.4 Technical specifications

### 3.4.1 Technical parameters

Table 3.1 parameter specifications

| Parameter specification | |
|---|---|
| Axle number | 6+1 |
| Payload | 150 g |
| Repeated positioning accuracy | 0.2 mm |
| Communication Interface | USB / WiFi * / Bluetooth |
| Power supply voltage | 100 V - 240 V, 50 / 60 Hz |
| Power input | 12 V / 4A DC |
| Power | 50W Max |
| Working environment | - 10 ° C - 60 ° C |

Table 3.2 axis motion parameters

| Axis motion parameters | | |
|---|---|---|
| Shaft | working range | maximum speed |
| Axis 1 | 100 ° to + 100 ° 31 ° | 31° / s |
| Axis 2 | - 600 ° to + 90 ° | 65 ° / s |
| Axis 3 | - 180 ° to + 50 ° | 28° / s |
| Axis 4 | - 180 ° to + 180 ° | 110° / s |
| Axis 5 | - 180 ° to + 40 ° | 33° / s |
| Axis 6 | -180 ° to + 180 ° | 66° / s |

Table 3.3 physical characteristics

| physical characteristics | |
|---|---|
| Net weight (manipulator and controller) | 1.5kg |
| Round base size | ＜diameter160mm |
| Material of manipulator | aluminum alloy, ABS engineering plastics |
| Controller | Arduino2560 |
| Robot installation | desktop |
| Package specification (L × w × h) | 220mm ×160mm ×270mm |
| The dimension of standard outer box (L × w × h) | 300mm x 200mm x 400mm |

Table 3.4 application software

| Application software | |
|---|---|
| Software | Mirobot Studio, grblcontroller3.6, Mirobot Blockly (Graphics Programming) |
| SDK | Mirobot communication protocol and Mirobot function library |
| Expandable I / O interface | step drive interface 1, I / O 4 (configurable as analog signal input (AD) or PWM output) |

### 3.4.2 Technical parameters

The size parameters of Mirobot are shown in Figure 3.5, and the installation hole size of its end flange is shown in Figure 3.6.

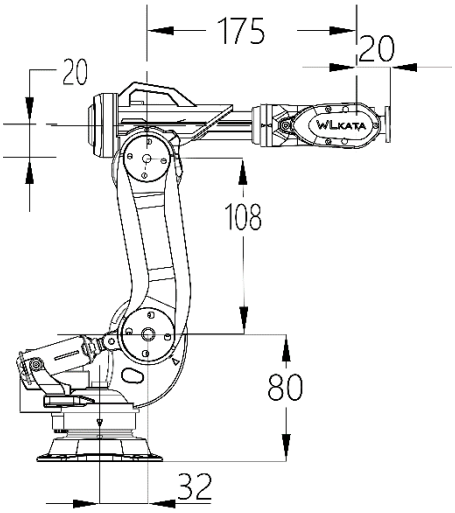


Figure 3.5 Mirobot size parameters

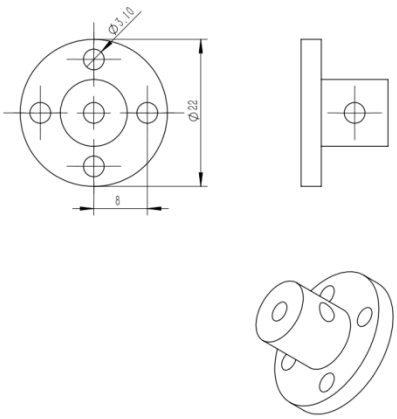


Figure 3.6 The end flange size

# 4 Interface description

## 4.1 Interface board

The Mirobot interface is located at the back of the base of the mechanical arm, and the schematic diagram of the base interface is shown in Figure 4.1.

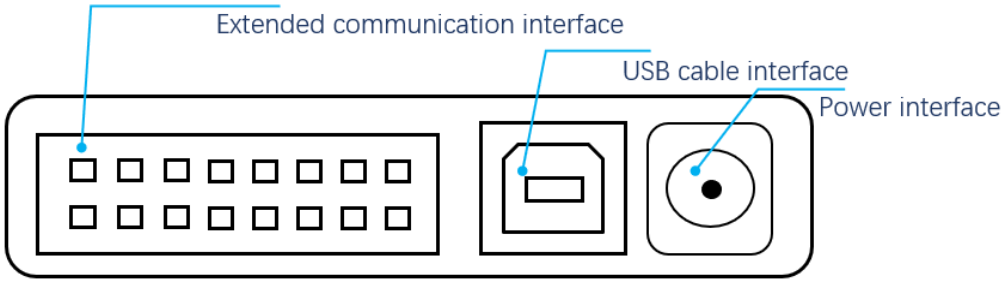


Figure 4.1 back interface of substructure

The PIN of the extended communication interface is shown in Figure 4.2. The definition of each pin is shown in table 4.1.

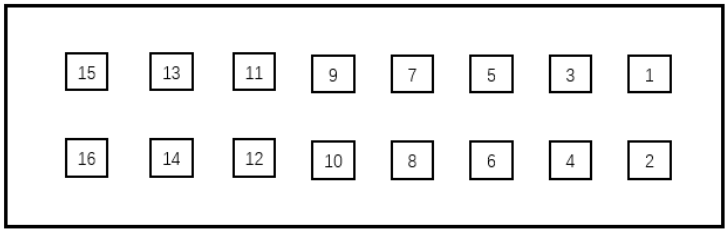


Figure 4.2 PIN of back extension communication interface of substructure

Table 4.1 pin definition of extended communication interface

| **15** | **13** | **11** | **9** | **7** | **5** | **3** | **1** |
|---|---|---|---|---|---|---|---|
| 2A | 2B | EX0 | 5V | GND | GND | RX_3 | RX_2 |
| **16** | **14** | **12** | **10** | **8** | **6** | **4** | **2** |
| 1A | 1B | EX1 | - | - | - | TX_3 | TX_2 |

Ex0 represents the output of pwm1, and EX1 represents the output of pwm2. 1b, 2b, 1a, and 2A refer to the four interfaces of the external sliding rail stepping motor. The Mirobot external communication interface needs to be connected with the external expansion interface board by

using a special cable arrangement. The common external interface board of Mirobot is shown in Figure 4.3. The pin definition is shown in Figure 4.4.

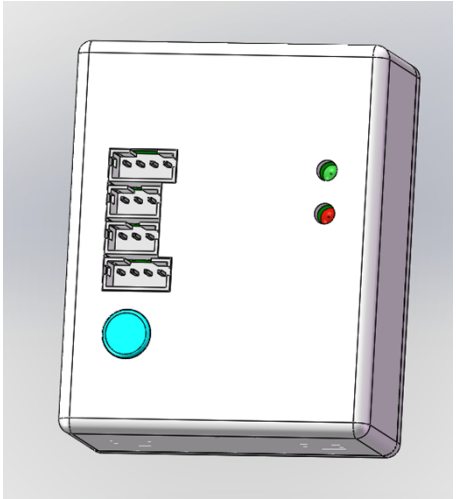

Figure 4.3Mirobot general external interface board

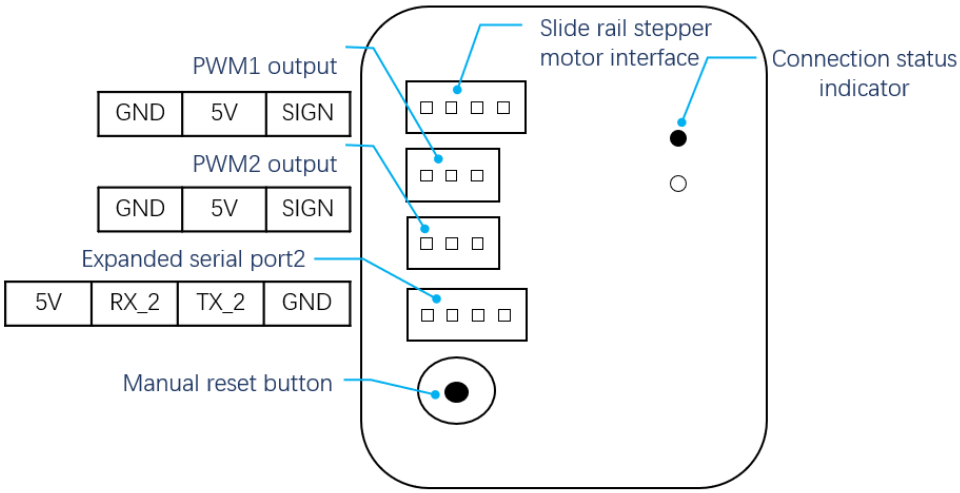


Figure 4.4Mirobot general external interface board pin definition diagram

**FCC Statement**

This device complies with part 15 of the FCC Rules. Operation is subject to the following two conditions:

(1) This device may not cause harmful interference, and (2) this device must accept any interference received, including interference that may cause undesired operation.

Any Changes or modifications not expressly approved by the party responsible for compliance could void the user's authority to operate the equipment.

Note: This equipment has been tested and found to comply with the limits for a Class B digital device, pursuant to part 15 of the FCC Rules. These limits are designed to provide reasonable protection against harmful interference in a residential installation. This equipment generates uses and can radiate radio frequency energy and, if not installed and used in accordance with the instructions, may cause harmful interference to radio communications. However, there is no guarantee that interference will not occur in a particular installation. If this equipment does cause harmful interference to radio or television reception, equipment generates, uses and can radiate radio frequency energy and, if not installed and used in accordance with the instructions, may cause harmful interference to radio communications. However, there is no guarantee that interference will not occur in a particular installation. If this equipment does cause harmful interference to radio or television reception,

—Reorient or relocate the receiving antenna.

—Increase the separation between the equipment and receiver.

—Connect the equipment into an outlet on a circuit different from that to which the receiver is connected.

—Consult the dealer or an experienced radio/TV technician for help.

**FCC RF Radiation Exposure Statement**

The equipment should be installed and operated with minimum distance 20cm between the radiator and your body.