Correct Disposal of this product

This marking indicates that this product should not be disposed with other household wastes throughout the EU. To prevent possible harm to the environment or human health from uncontrolled waste disposal, recycle it responsibly to promote the sustainable reuse of material resources. To return your used device, please use the return and collection systems or contact the retailer where the product was purchased. They can take this product for environ–mental safe recycling.

FCC Warning

This device complies with part 15 of the FCC Rules. Operation is subject to the following two conditions: (1) This device may not cause harmful interference, and (2) this device must accept any interference received, including interference that may cause undesired operation.

NOTE 1: This equipment has been tested and found to comply with the limits for a Class A digital device, pursuant to part 15 of the FCC Rules. These limits are designed to provide reasonable protection against harmful interference when the equipment is operated in a commercial environment. This equipment generates, uses, and can radiate radio frequency energy and, if not installed and used in accordance with the instruction manual, may cause harmful interference to radio communications. Operation of this equipment in a residential area is likely to cause harmful interference in which case the user will be required to correct the interference at his own expense.

NOTE 2: Any changes or modifications not expressly approved by the party responsiblefor compliance could void the user' s authority to operate the equipment.

OWNER' S MANUAL

⚠ CAUTION

Please read all precautions and instructions in this manual before using this equipment.

FUNCTION INTRODUCTION

Please scan the QR code below to get the instructions of the treadmill software.

TABLE OF CONTENTS

SAFETY INSTRUCTIONS ---------- 1
TECHNICAL PARAMETER ---------- 2
PACKING LIST ---------- 2
PARTS DIAGRAM ---------- 3
WIRELESS CHARGINGINSTRUCTIONS ---------- 3
ASSEMBLY ---------- 4
DAILY MAINTERANCE ---------- 8
APPENDIX ---------- 10
FUNCTION INTRODUCTION ---------- 11

IMPORTANT SAFETY INFORMATION

WARNING: To reduce the risk of burns,fire,electric shock,or injury to persons,read the following important precautions and information before operating the treadmill.

1. The treadmill has a user maximum capacity of 180kg for one person at a time.
2. For indoor only.
3. Do not put any objects around the treadmill to avoid any possible of injuries.
4. Keep the treadmill stably and carefully while changing position or moving.
5. Keep treadmill away from water, humid, heated and fire.
6. Never insert any object of body parts into any opening for picking. Switch off firstly.
7. Do not use accessory attachments that are not recommended to avoid any injuries and damage to treadmill.
8. The treadmill should be properly grounded and make sure that the outlet can supply enough electricity to the treadmill.
9. Wear training clothes and shoes which are suitable for running on the treadmil. Don't use the treadmill in bare feet.
10. To avoid injury, stand on the side rails before starting the treadmill.
11. The display of the heart rate is for reference only; it is not medical device and may be affected by many unknowable factors.
12. The user who has problems with his heart should use the treadmill under the doctor's directions.
13. Please select the right running speed according to your own physical condition.
14. Never leave the treadmill unattended while it is running.Unplug the treadmill after switching off.
15. Keep childen under the age of 12 and pets away from the treadmill at all time.
16. To avoid electric shock, do not use this unit during a lightning storm.
17. Don't keep the treadmill running overloaded for a long time; the overload may damage the motor and the controller and also it reduce the service lifetime of bearing, belt and deck.
18. Don't touch any moving parts .
19. Stop using the treadmill in case of discomfort or when there is something wrong with the treadmill.
20. Long-haired user should pay more attention to your hair while using the treadmill.
21. Do not operate the treadmill with a damaged or frayed power cord.If the supply cord is damaged, it must be replaced by the manufacturer or its service agent or a similarly qualified person in order to avoid a hazard.
22. This appliance is not intended for use by persons (including children) with reduced physical,sensory mental capabilities,or lack of experience and knowledge,unless they have beengiven supervision or instruction concerning use of the appliance by a person responsible for their safely.
23. Chilren should be supervised to ensure that they do not play with the appliance.

Correct Disposal of this product:

This product should not be disposed with other household wastes throughout the EU. To prevent possible harm to the environment or human health from uncontrolled waste disposal, recycle it responsibly to promote the sustainable reuse of material resources. To return your used device, please use the return and collection systems or contact the retailer where the product was purchased. They can take this product for environmental safe recycling.

CAUTION: Before begining this or any exercise program,consult your physician. This is especially important for persons over the age of 35 or persons with pre-existing health problems. Read all instructions before using.

APPENDIX

Commercial Treadmill Maintenance Sheet

Inspection Items for Maintenance	Objective	Important	By owner appointed maintainer			By distributor or manufacturer		serviceable tools
			Every day	Every week	Every month	Every Quarter	Semi-Annual	
Equipment Appearance	Running belt cleaning	●	Clean					Flexible cloth, dust collector
	Running board cleaning	●	Clean					Flexible cloth, dust collector
	Side pedal		Clean					Flexible cloth, dust collector
	Console panel cleaning		Clean		Check			Flexible cloth, dust collector
	Handle cleaning		Clean					Flexible cloth
	Underneath Cleaning	●			Clean			Dust collector
	Mainframe set screw				Check			Tools
	If Plug is stick	●	Check					
Console	Emergency stop	●	Check					
	Heart rate test			Check				
Running belt	Breakage			Check				
	Tight/Loose	●	Check					T shape wrench
	Deviation	●	Check					T shape wrench
Running board	Lubricate with running belt	●		Check				
	If there is heave, groove or crack on the board				Check			
	Tighten the screw				Check			
Motor compartment	Cleaning	●			Clean, Dust absorpt			Shut off
	Silicone oil remain	●			Check, Replenish			Original lubricating oil
	Front roller belt race deposit				Check, Clean		Check	Dust collector/ Hairbrush
	Motor belt race deposit				Check, Clean		Check	Dust collector/ Hairbrush
	Belt deviation				Check		Check	
	Belt Breakage				Check		Check	
Roller	Abdominal noise				Check		Check	

Notice:

1. Please rotate the running belt manually while cleaning the running belt and running board.
2. Never cleaning the running belt with Disinfectant or any other acid/alkaline detergent.
3. Must use dry flexible cloth or dust collector to clean the running belt.
4. Never use wipe any part of the machine with a dripping rag.
5. Most faults of the treadmill are caused by irrational maintenance. Please perform maintenance on your treadmill regularly.

DAILY MAINTERANCE

The running belt of the treadmill is imported which was made from special materials with lower coefficient of friction and higher of tensile strength; the running board is with double shock-absorb system and which surface is smooth and hard wearing.

Lubricating

It can prolong the life of treadmill to keep it in clean situation, so it's necessary to clean usually the exposed running board and side foot-board, to wipe running belt by soft cloths with water, please pay attention to prevent the water from the underside of belt and over.

The treadmill uses the auto-lubricating system. When the console test the total distance reached the pre-setted distance in the system,the lubricating motor begin to work.During using ,user should check the auto-lubricating system timely. Add the oil quickly if find the oil bottle is empty. If the auto-lubricating system don't work well,please call the dealer quickly.

Adjusting to loose or tight belt

The running belt was adjusted before it left the factory and after assembling, but after a period of usage, the belt will become loose, this circumstance is out of guarantee to be repaired. The user can adjust it by oneself .the loose belt will slip, but over much tight belt perhaps harms the motor, roller and itself.

Solution

Remove the key and **UNPLUG THE POWER CORD.** Using the allen wrench, turn both rear roller adjustment bolts counterclockwise, 1/4 of a turn. When the walking belt is properly tightened, you should be able to lift each side of the walking belt 5 to 6 cm off the walking platform. Be careful to keep the walking belt centred. Plug in the power cord, insert the key and run the treadmill for a few minutes. Repeat until the walking belt is properly tightened.

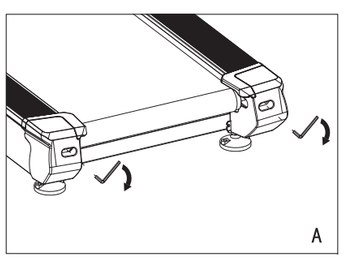

More attention: it's not over much tight, much better.

The walking belt is off-centre

All the running belt were adjusted before the treadmill left the factory or after assembling,but after a period of usage,the belt will off-centre,this circumstance is from the following causes:

(1) The treadmill is not horizontal.
(2) The feet of user do not stand on the center of belt.
(3) The two feet of user are with different strengths.

Solution

Usually it can return after several minutes' moving, but if it can't, please adjust the bolt which is at the end of treadmill at unit of half-circle by a allen wrench. If the belt slant to left, please adjust the left boltclock-wisely or adjust the right bolt counter clock-wisely(B).If the belt slant to right, it's adjusted oppositely(C).Repeat until the walking belt is centred(The side of running belt in the label's green colour)(D).

The excentric running belt is out of guarantee .The user adjust it by oneself.

More attention:The excentric belt will strictly harm itself,so the user must adjust it once find this circumstance.

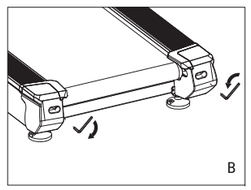

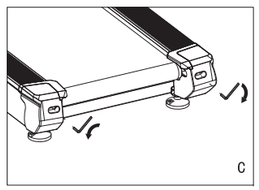

Technical Parameter

1	Input voltage： 220V±15% （50Hz或60Hz）
2	Motor power ： 3.0 Hp （Max 7 Hp）
3	Surrounding temperature： 0-40 ° C
4	Speed scope： 1--20（Km/h）
5	Incline scope： 0--15%
6	Time scope： 00:00:00-99:59:59+（Min.：Sec.）
7	Distance scope： 0-999+（Km）
8	Calorie： 0-999+（Kilocalorie）

Packing List

NO.	Description	Quantity
1	Mainframe	1 PC
2	Electronic watch	1 PC
3	Electronic watch holder	1 PC
4	Tray handle	1 PC
5	Frame of upright pole	2 PCS
6	Cylindrical head hexagon bolt M6*12	2 PCS
7	Cylindrical head hexagon bolt M6*16	4 PCS
8	Cylindrical head hexagon bolt M8*85	4 PCS
9	Cylindrical head hexagon bolt M10*30	11 PCS
10	Spring washer M6（black）	4 PCS
11	Spring washer M6	4 PCS
12	Spring washer M8	4 PCS
13	Spring washer M10	11 PCS
14	Plate washer M6	4 PCS
15	Tool	1 SET
16	Oil pot	1 PC
17	Specification	1 PC

Parts Diagram

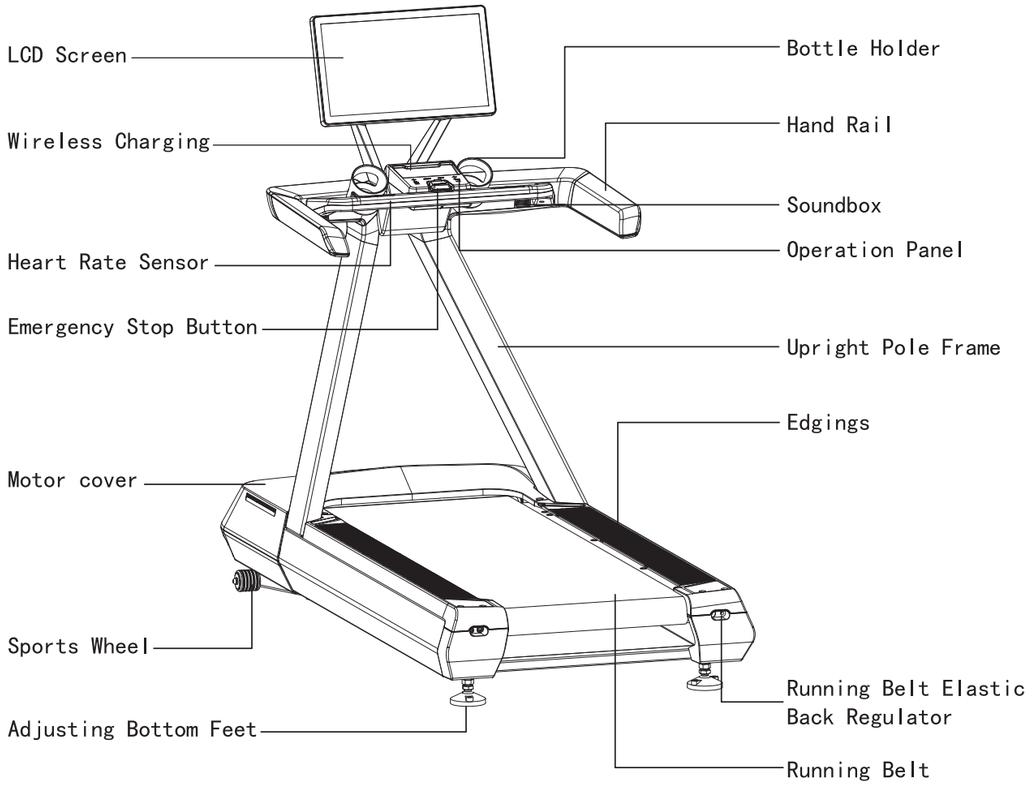

Wireless charging instructions

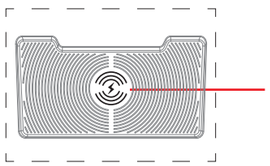

1. “ ” Wireless charging only supports mobile phones that meet Qi standard;
2. Because of different brands of mobile phone wireless charging receiving position is different, can't satisfy all phones on the market, the general recommended phone placed in the right bottom corner of the charging area if unable to charge, please reverse phone 180 ° or on the lower left corner to try;
3. Metal items cannot be placed in the charging position, which will lead to wireless charging failure;
4. The protective cover of mobile phone will reduce the efficiency of wireless charging. If the protective cover is too thick or metal protective cover will lead to automatic protection of wireless charging, wireless charging cannot be realized。

Our company keeps the right of improving any parts and will not advice when we make improvement.

DAILY MAINTERANCE

This treadmill uses a manual refuel system. When the controller detects that the total mileage or the time from the last refueling has reached the preset value, the screen will pop up a dialog box, indicating that it is time for you to refuel the running belt. Please open the trim cover of upright pole which under the right upright pole, using the silicon oil bottle which attached with the machine, at the time when machine running in lower speed , slowly drip the silicon oil into the hole, refuel 50ml every time.

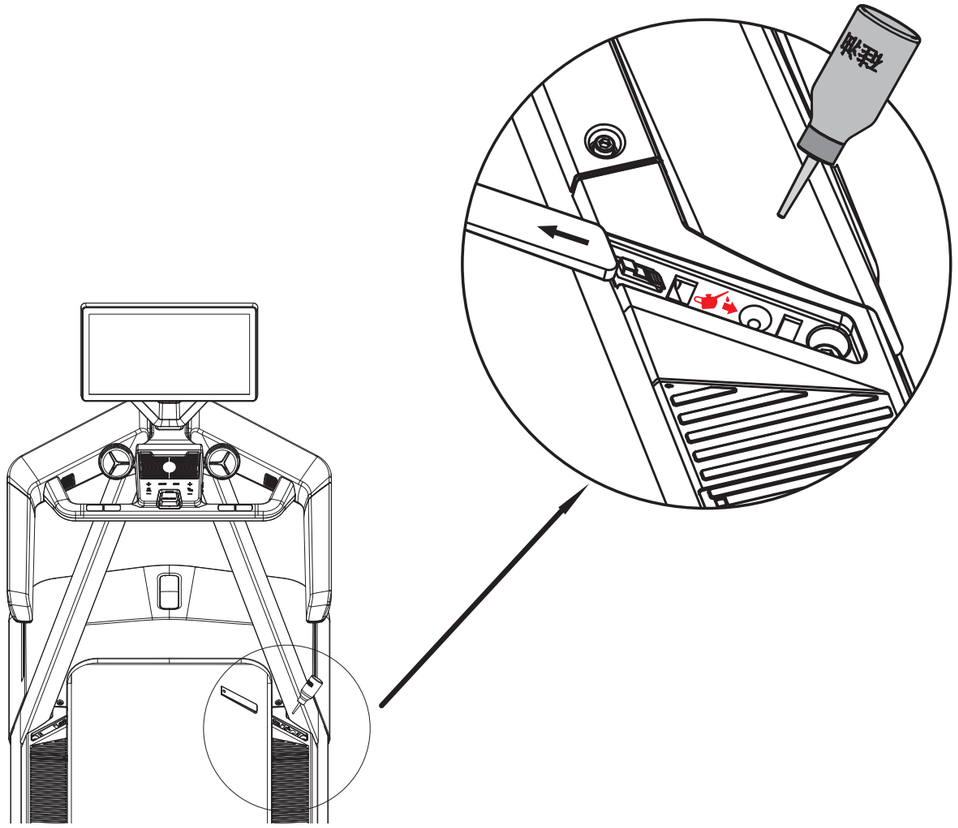

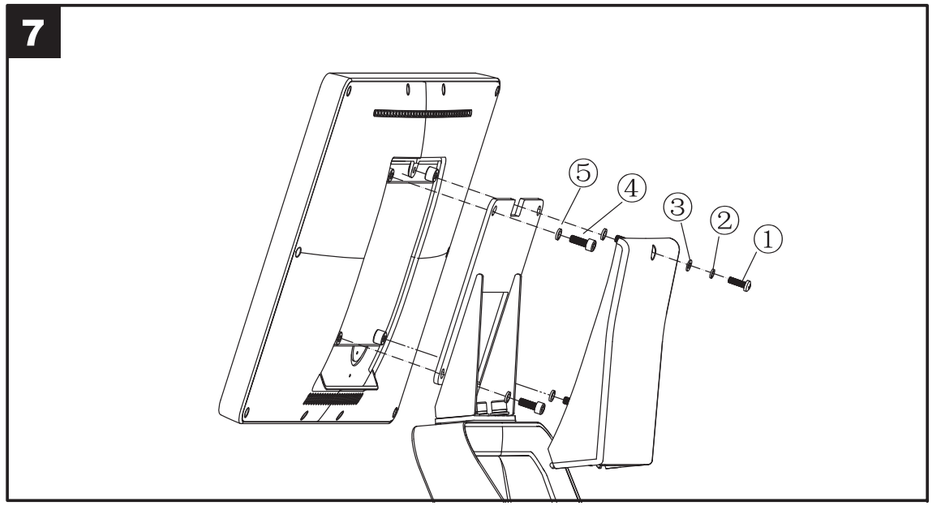

Loosen the cross screws ① at the back cover of electronic watch, fixed the LCD screen on the bracket with screws ④ .

① Cross groove large flat head screw - - - M5*15 / 1Pc
② Sping washer - - - - - - - - - - - - - - - - M5 / 1Pc
③ Flat washer - - - - - - - - - - - - - ϕ 10* ϕ 5.3*1 / 1Pc
④ Socket cap screw - - - - - - - - - - - M6*16 / 4Pcs
⑤ Sping washer - - - - - - - - - - - - - - - - M6 / 4Pcs

Remark: ***when the electronic table is installed, please check whether the code number is consistent with the code number of the machine nameplate! ! !***

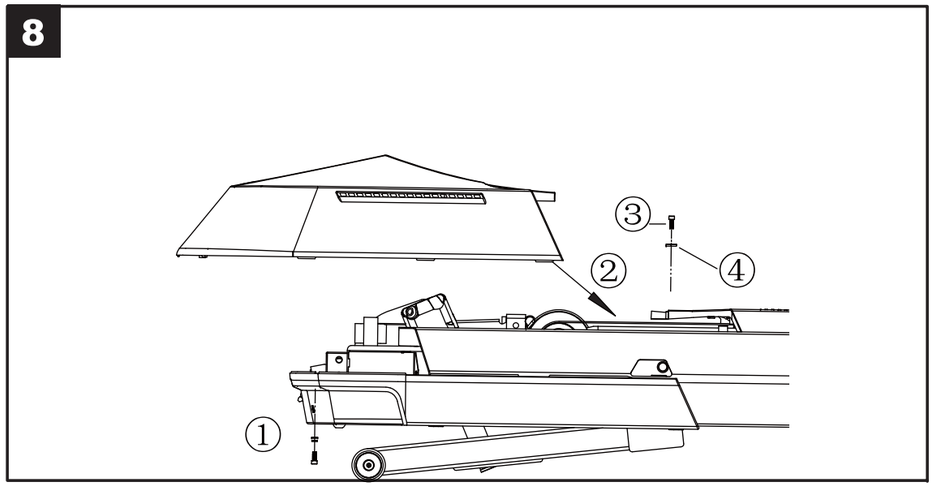

Once complete the circuit connection of whole machine, put back the electronic watch tray cover, LCD screen back cover and trim cover of the left and right upright pole, finally fixed upper cover of the motor with screw ① ③ , installation be finished.

③ Socket cap screw- - - - - - M6*12 / 2Pcs
④ Flat washer - - - - - - - - - - M6 / 2Pcs

ASSEMBLY

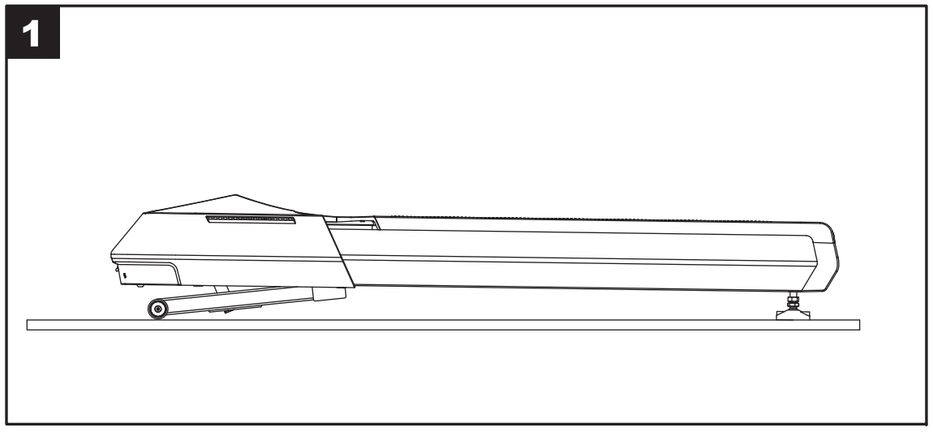

Remove the treadmill from the packing carton and put flat on the ground.

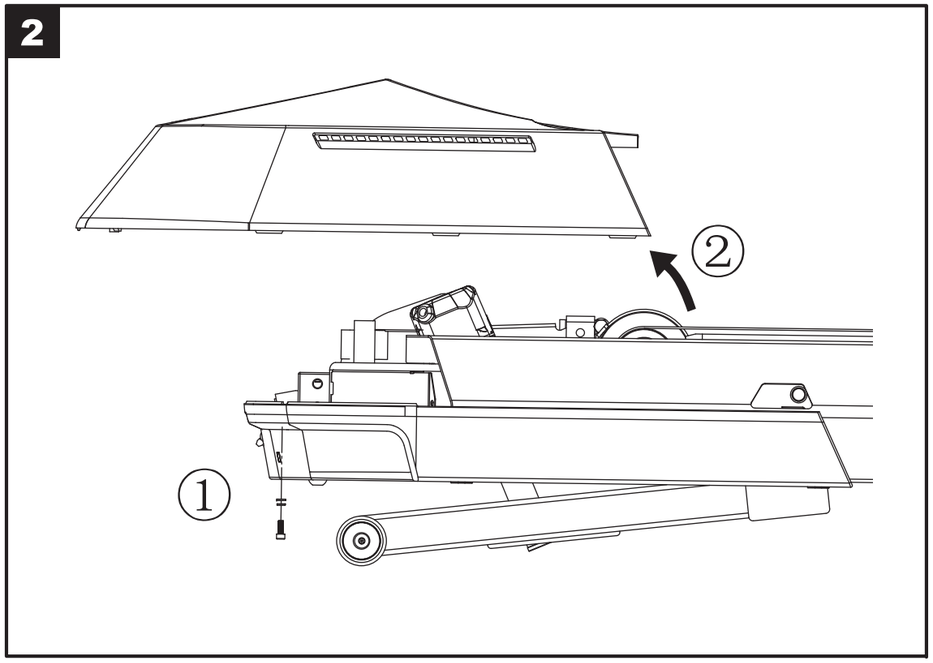

Remove the two M5 hexagon screws whichfixing the upper cover of the motor and open the upper cover of the motor in diagonally direction.

3

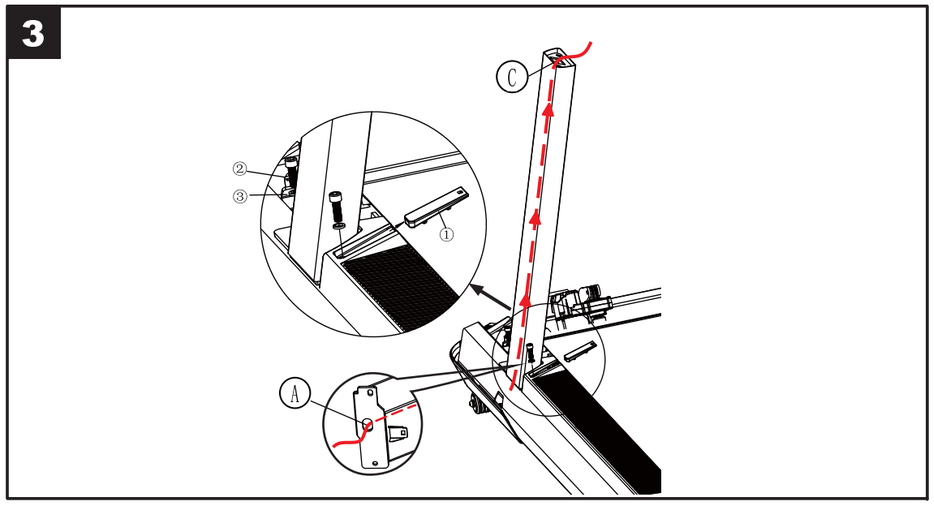

1、Press one side of theupright pole trim cover , sliding out the trim cover ①
along the arrow direction.
2、Connect the data cable at the bottom frame of the treadmill with the iron
core bundle wire of the left upright pole, go through hole Ⓐ and hole Ⓒ at the
bottom of the left pole。
3、Insert the upright pole, install the hexagon socket screw②, please do not lock .

① Upright rod trim cover 4pieces - - - - - - - -1Pcs
② Socket cap screw - - - - - - - - M10*30 / 4Pcs
③ Springwasher - - - - - - - - - - M10 / 4Pcs

4

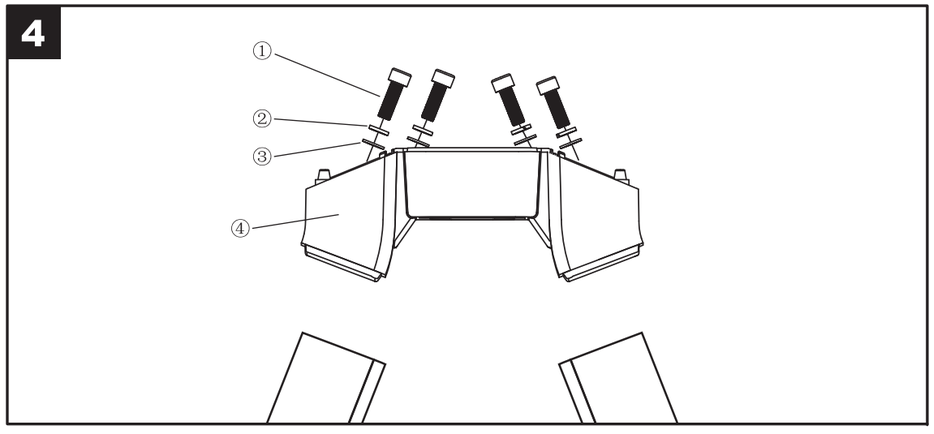

Insert the pallet connector ③ into left and right upright pole and lock them with screw ①. Then lock all the screws in the previous step.

① Socket cap screw - - - - - - - - M10*30 / 4Pcs
② Spring washer - - - - - - - - - - - M10 / 4Pcs
③ Flat washer - - - - - - - - - - - - M10 / 4Pcs
④ Pallet connector - - - - - - - - - - - - - - - -1Pc

5

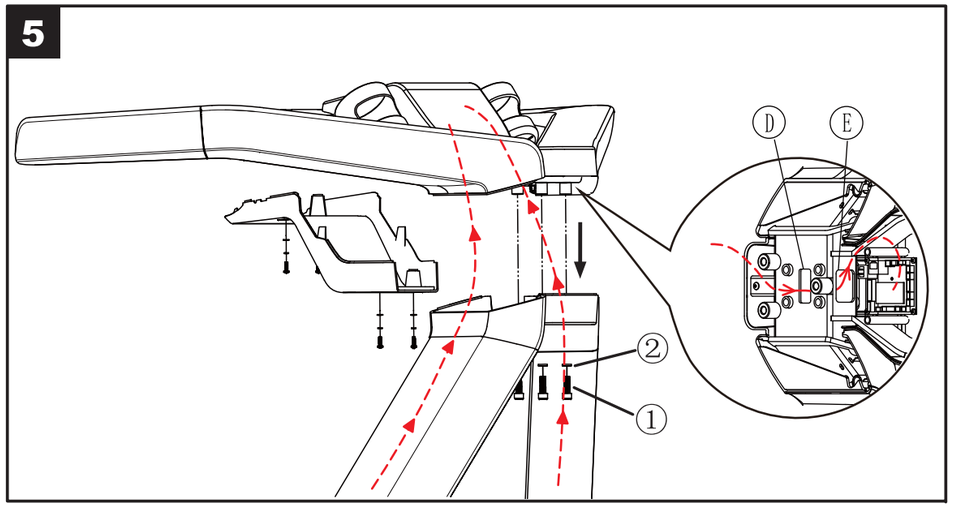

1、Remove 4 crosshair screws which fixing the lower cover of the electronic watch tray.
2、The upper end of the data cable of the left pole needs to be along through the Ⓓ hole
and Ⓔ hole of the electronic watch tray handle, connect to the circuit board.
3、Put the electronic watch tray into the tray rack, lock with screw①.

① Socket cap screw - - - - - M10*30 / 3Pcs
② Spring washer - - - - - - - - M10 / 3Pcs

6

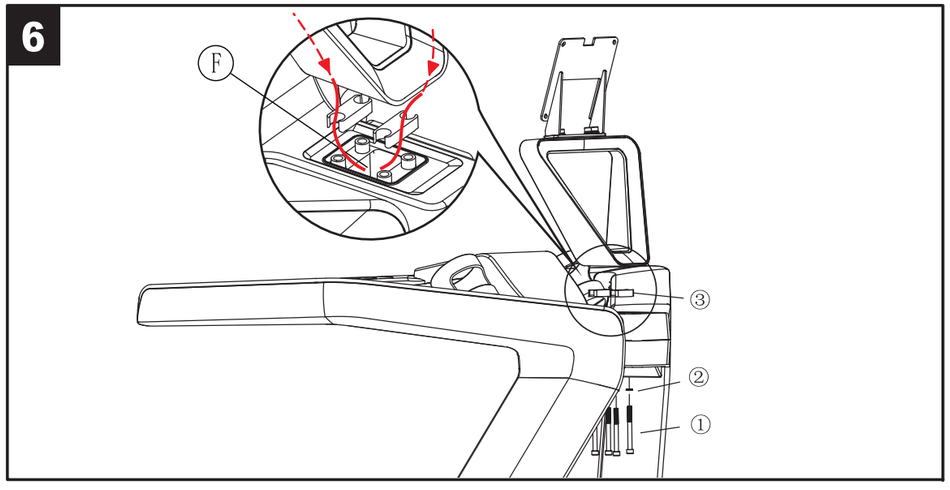

1、The black and white data lines at the lower end of the electronic watch bracket need
to be inserted along the Ⓕ hole and fixed on the circuit board.
2、Put rubber cushion ③, lock the electronic table bracketwith screws ①.
(Remark：Theside of the cushion with grooves shouldbe placed downward)
When using screws to lock the electronic watch bracket, pay attention to adjust the
bracket level.

① Socket cap screw - - - - -M8*85 / 4Pcs
② Spring washer - - - - - - - -M8 / 4Pcs
③ Rubber cushion - - - - - - - - - - 2Pcs