SAR

Dipole&Waveguide

Performance Measurement Report

ISSUED BY
Shenzhen BALUN Technology Co., Ltd.

FOR

Validation Dipoles &Waveguide

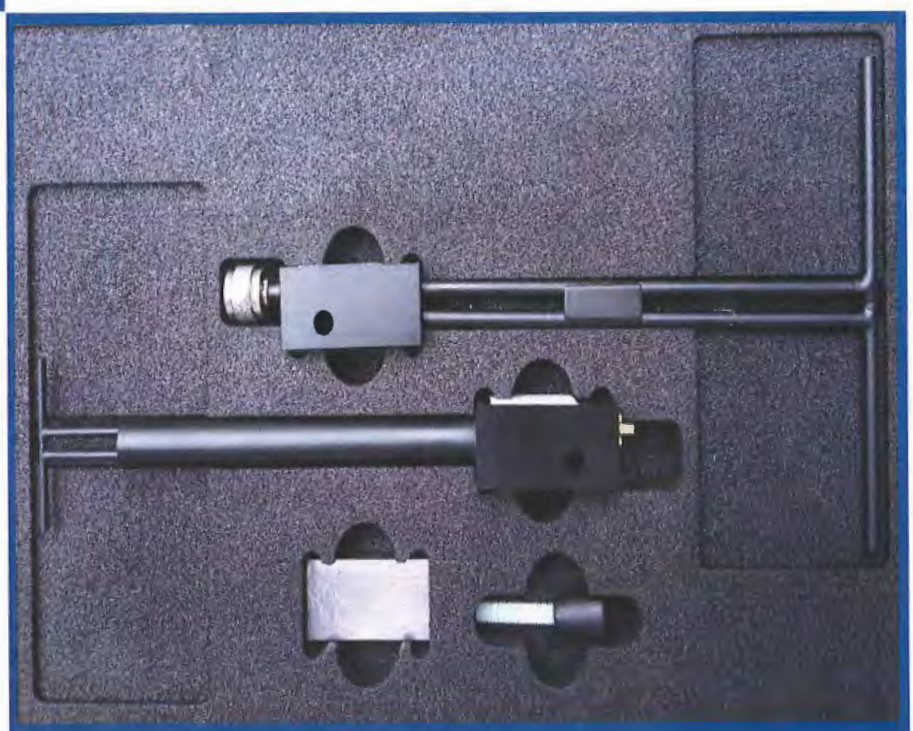

Report No.:	LW-SZ2030763
EUT Type:	SAR Validation Dipole and Waveguide
Model Name:	DIP 0G750-446, DIP 0G835-447 DIP 0G900-448, DIP 1G800-449 DIP 1G900-450, DIP 2G000-451 DIP 2G450-452, DIP 2G600-453 SWG5500-WGA 42
Brand Name:	SATIMO
Test Conclusion:	Pass
Test Date:	Mar. 18, 2020 ~ Mar. 20, 2020
Date of Issue:	Mar. 20, 2020

Tested by: Zong Liyao
(Engineer)

Approved by: Liao Jianming
(Technical Director)

NOTE: This test report can be duplicated completely for the legal use with the approval of the applicant; it shall not be reproduced except in full, without the written approval of Shenzhen BALUN Technology Co., Ltd. BALUN Laboratory. Any objections should be raised within thirty days from the date of issue. To validate the report, please visit BALUN website.

Block B, 1st FL,Baisha Science and Technology Park, Shahe Xi Road, Nanshan District, Shenzhen, Guangdong, P. R. China 518055
TEL: +86-755-66850100, FAX: +86-755-61824271
Email: info@baluntek.com
www.baluntek.com

1 GENERAL INFORMATION

1.1 Introduction

This document contains a summary of the requirements set forth by the IEEE 1528, FCC KDB 865664 D01 for reference dipoles used for SAR measurement system validations. Instead of the typical annual calibration recommended by measurement standards, the reference dipoles were demonstrated that the SAR target, impedance and return loss have remain stable, so the longer calibration interval is acceptable.

1.2 General Description for Equipment under Test (EUT)

Model	Frequency	Serial Number	Product Condition(New/ Used)	Last Cal. Date	Last Meas. Date
Dipole					
DIP 0G750	750 MHz	SN 11/17 DIP 0G750-446	Used	2019/03/20	2020/03/18
DIP 0G835	835 MHz	SN 11/17 DIP 0G835-447	Used	2019/03/20	2020/03/18
DIP 0G900	900 MHz	SN 11/17 DIP 0G900-448	Used	2019/03/20	2020/03/18
DIP 1G800	1800 MHz	SN 11/17 DIP 1G900-449	Used	2019/03/20	2020/03/19
DIP 1G900	1900 MHz	SN 11/17 DIP 1G900-450	Used	2019/03/20	2020/03/19
DIP 2G000	2000 MHz	SN 11/17 DIP 2G000-451	Used	2019/03/20	2020/03/19
DIP 2G450	2450 MHz	SN 11/17 DIP 2G450-452	Used	2019/03/20	2020/03/19
DIP 2G600	2600 MHz	SN 11/17 DIP 2G600-453	Used	2019/03/20	2020/03/19
Waveguide					
SWG5500	5GHz-6GHz	SN 49/16 WGA42	Used	2019/03/20	2020/03/20

1.3 Test Equipment List

Description	Manufacturer	Model	Serial No.	Cal. Date	Cal. Due
PC	Dell	N/A	N/A	N/A	N/A
E-Field Probe	MVG	SSE2	SN 34/15 SSE2 EPGO265	2019/05/16	2020/05/15
Phantom1	SATIMO	SAM	SN 30/13 SAM103	N/A	N/A
Phantom2	SATIMO	SAM	SN 30/13 SAM104	N/A	N/A
MultiMeter	Keithley	MultiMeter 2000	4024022	2019/06/17	2020/06/16
Signal Generator	R&S	SMBV100A	260592	2019/06/13	2020/06/12
Power Meter	R&S	NRVD-B2	7250BJ-0112/2011	2019/10/30	2020/10/29
Power Sensor	R&S	NRV-Z4	100381	2019/10/30	2020/10/29
Power Sensor	R&S	NRV-Z2	100211	2019/10/30	2020/10/29
Signal Generator	R&S	SMBV100A	260592	2019/06/13	2020/06/12
Thermometer	Elitech	RC-4HC	N/A	2019/11/02	2020/11/01
Power Amplifier	SATIMO	6552B	22374	N/A	N/A
Dielectric Probe Kit	SATIMO	SCLMP	SN 25/13 OCPG56	N/A	N/A
Attenuator	COM-MW	ZA-S1-31	1305003187	N/A	N/A
Directional coupler	AA-MCS	AAMCS-UDC	000272	N/A	N/A

1.4 EUT Photos

DIP 0G750-446

DIP 0G835-447

DIP 0G900-448
DIP 1G800-449

DIP 1G900-450
DIP 2G000-451

DIP 2G450-452
DIP 2G600-453
Waveguide SWG5500

2 DIPOLE IMPEDANCE AND RETURN LOSS

The dipoles are designed to have low return loss when presented against a flat phantom at the specified distance. A Vector Network Analyzer was used to perform a return loss measurement on the specific dipole when in the measurement location against the phantom and the distance was specified by the manufacturer with a special, low loss and low relative permittivity spacer.
The impedance was measured at the SMA-connector with the network analyzer.

The measurement of verification with return loss should not deviate by more than 20% and minimum of 20 dB of the return loss, and the impedance (real or imaginary parts) should not deviate by more than 5 Ohms from the previous measurement using network analyzer.

Note:
The “Previous Meas.” in the following table refer to dipoles or other equivalent RF sources calibration reports.

2.1 DIP 0G750

RETURN LOSS AND IMPEDANCE IN HEAD LIQUID

Meas. Results	Current Meas.	Previous Meas.	Max. Deviation
Return Loss(dB)	-26.12	-32.48	1.1 %
Impedance	53.2 Ω +2.7 jΩ	51.6 Ω +1.7 jΩ	0.8 Ω (Imaginary part)

Return Loss

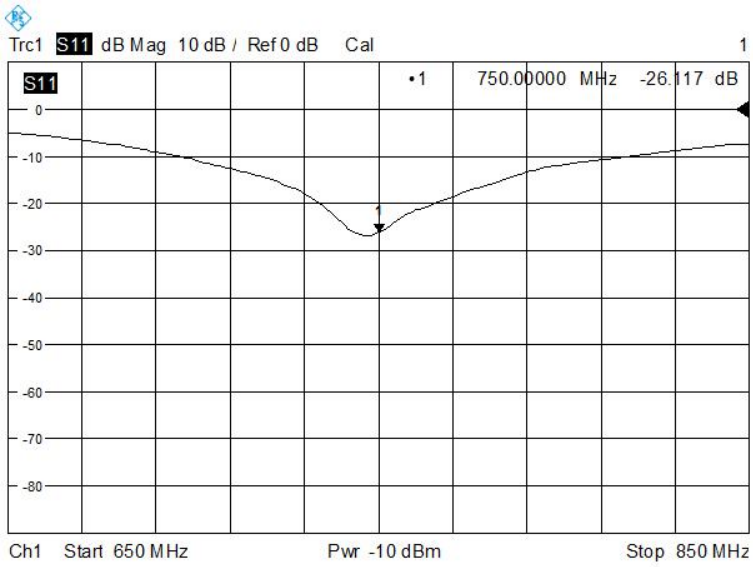

Impedance

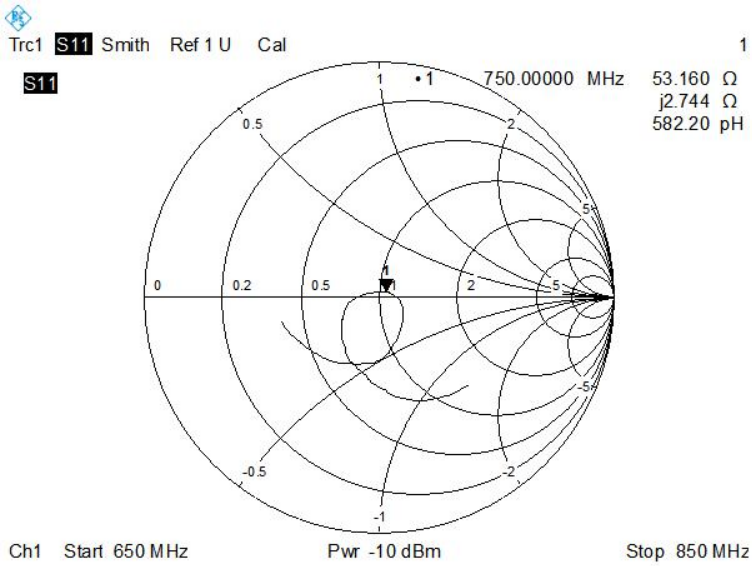

RETURN LOSS AND IMPEDANCE IN BODY LIQUID

Meas. Results	Current Meas.	Previous Meas.	Max. Deviation
Return Loss(dB)	-26.69	-23.50	3.8 %
Impedance	50.1 Ω + 5.4 jΩ	48.8 Ω + 6.6 jΩ	1.0 Ω (Real part)

Return Loss

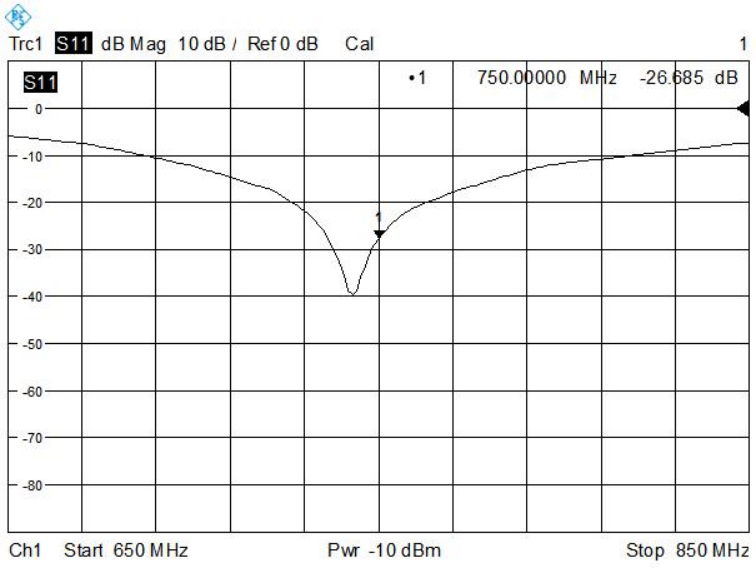

Impedance

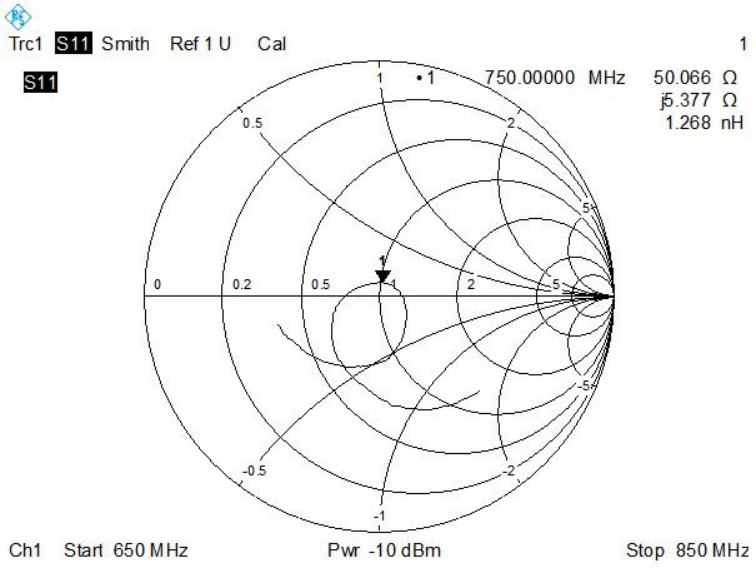

2.2 DIP 0G835

RETURN LOSS AND IMPEDANCE IN HEAD LIQUID

Meas. Results	Current Meas.	Previous Meas.	Max. Deviation
Return Loss(dB)	-31.42	-34.07	3.1%
Impedance	55.6 Ω -3.4 jΩ	49.3 Ω +1.8 jΩ	2.3 Ω (Imaginary part)

Return Loss

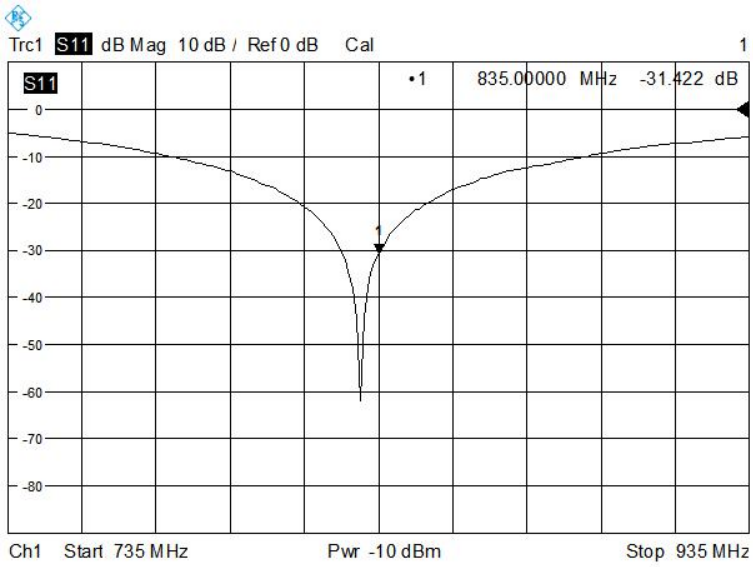

Impedance

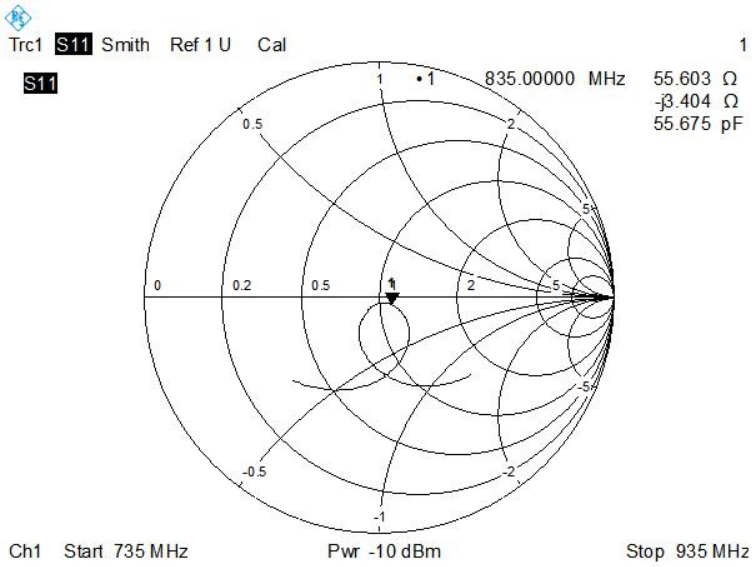

RETURN LOSS AND IMPEDANCE IN BODY LIQUID

Meas. Results	Current Meas.	Previous Meas.	Max. Deviation
Return Loss(dB)	-24.02	-22.96	4.0%
Impedance	47.3Ω+5.0 jΩ	45.3Ω+5.3 jΩ	0.9 Ω (Real part)

Return Loss

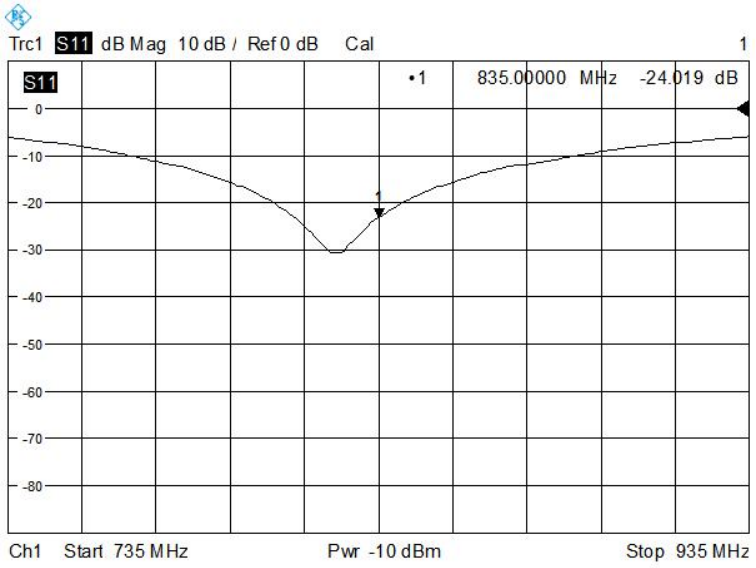

Impedance

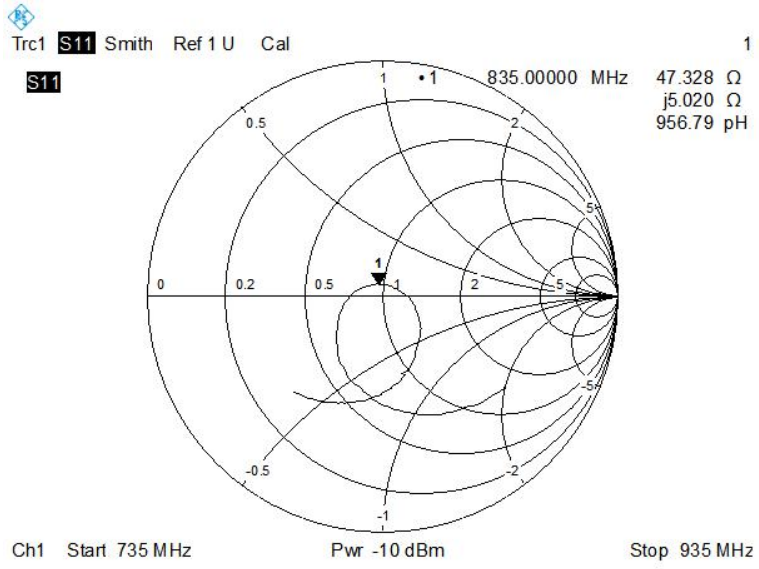

2.3 DIP 0G900

RETURN LOSS AND IMPEDANCE IN HEAD LIQUID

Meas. Results	Current Meas.	Previous Meas.	Max. Deviation
Return Loss(dB)	-30.91	-30.38	2.0%
Impedance	50.39 Ω - 2.4 jΩ	51.8 Ω - 2.4 jΩ	1.4 Ω (Real part)

Return Loss

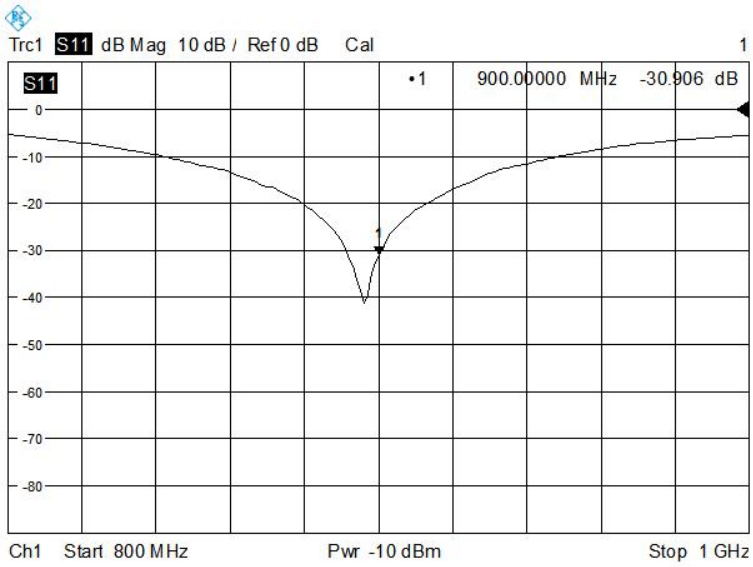

Impedance

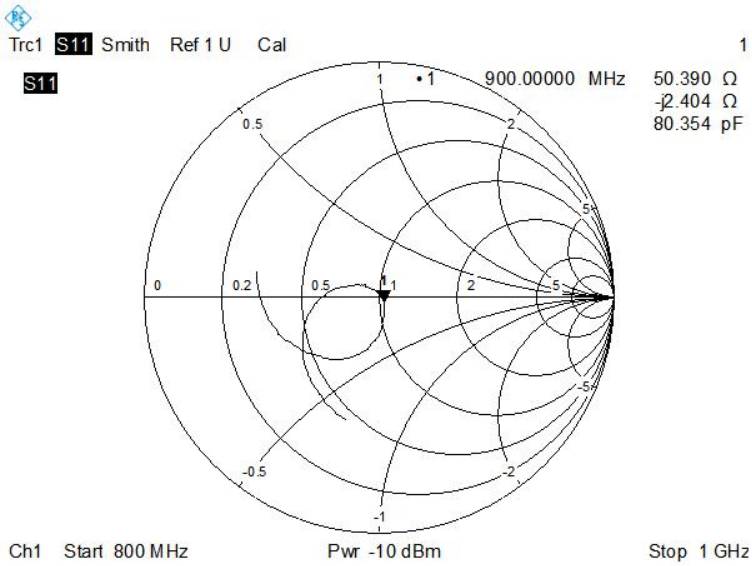

RETURN LOSS AND IMPEDANCE IN BODY LIQUID

Meas. Results	Current Meas.	Previous Meas.	Max. Deviation
Return Loss(dB)	-28.58	-27.29	3.5%
Impedance	54.4 Ω +2.1 jΩ	53.4 Ω +2.6 jΩ	0.3 Ω (Real part)

Return Loss

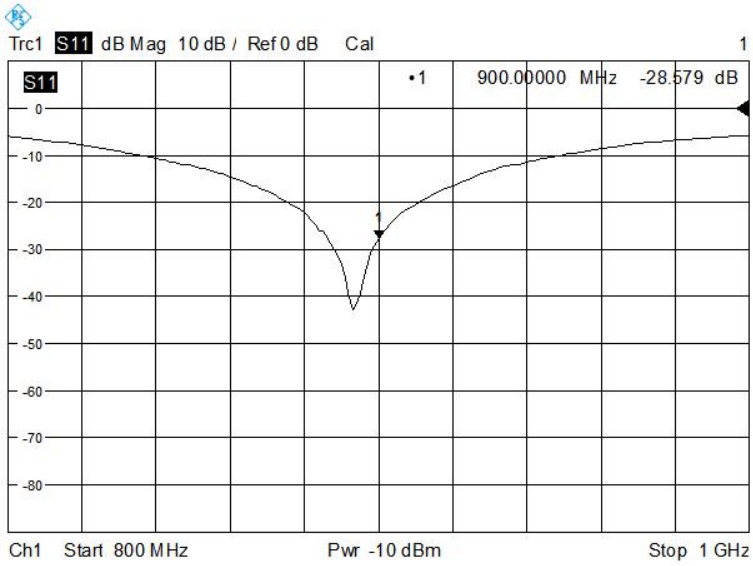

Impedance

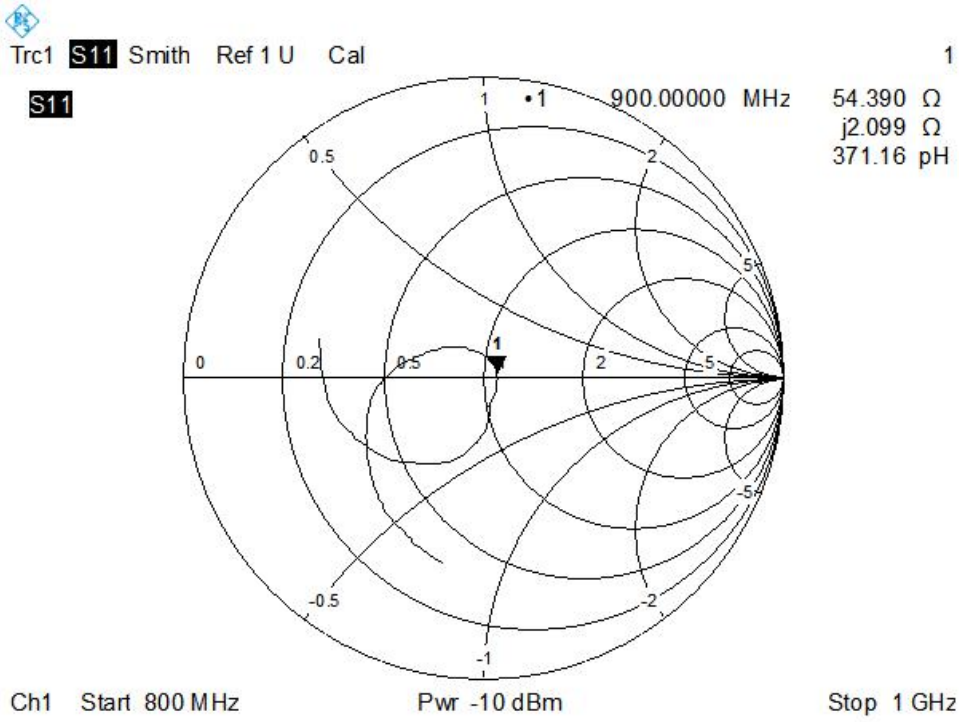

2.4 DIP 1G800

RETURN LOSS AND IMPEDANCE IN HEAD LIQUID

Meas. Results	Current Meas.	Previous Meas.	Max. Deviation
Return Loss(dB)	-23.52	-25.49	3.1%
Impedance	41.6Ω + 3.3 jΩ	45.4Ω + 2.6 jΩ	3.2 Ω (Real part)

Return Loss

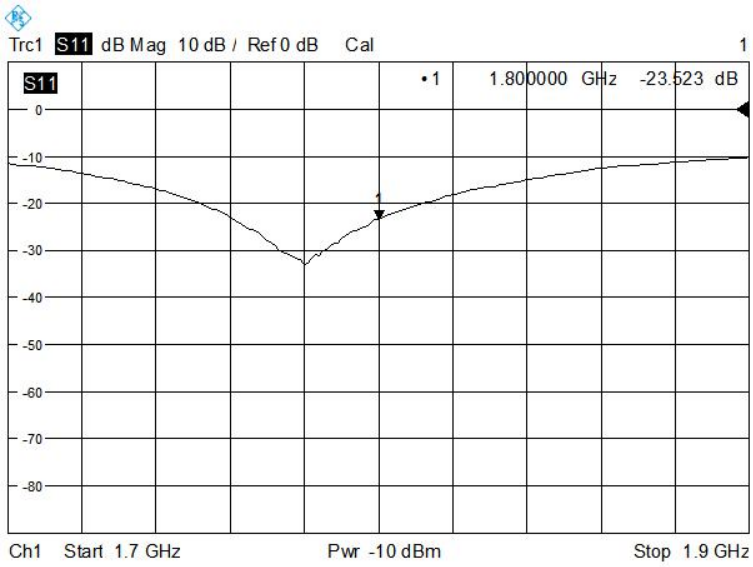

Impedance

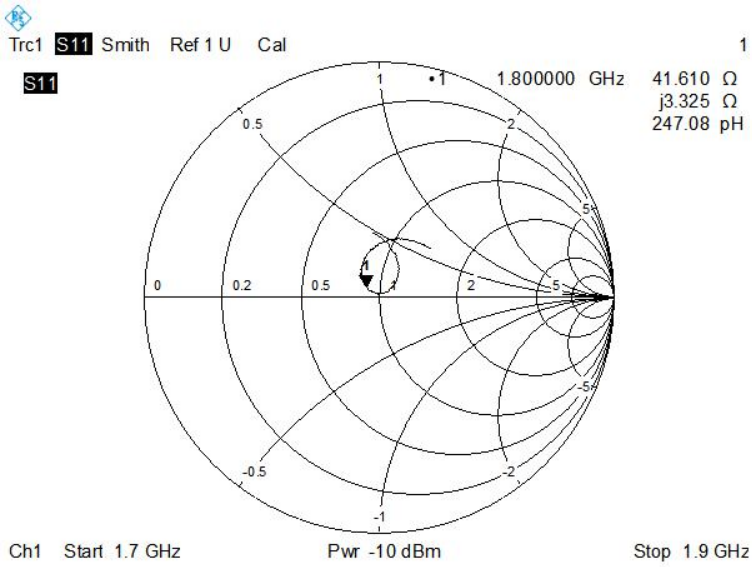

RETURN LOSS AND IMPEDANCE IN BODY LIQUID

Meas. Results	Current Meas.	Previous Meas.	Max. Deviation
Return Loss(dB)	-26.39	-26.35	3.7%
Impedance	46.0Ω +3.4 jΩ	45.4Ω -1.5 jΩ	1.8 Ω (Real part)

Return Loss

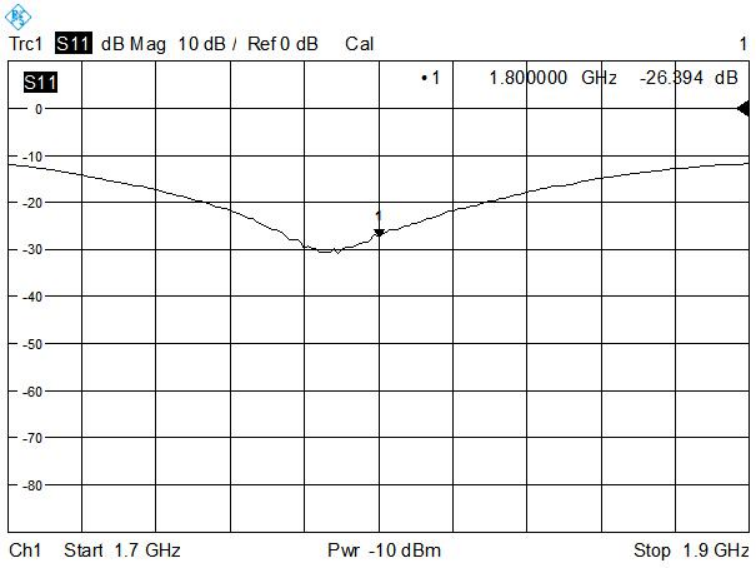

Impedance

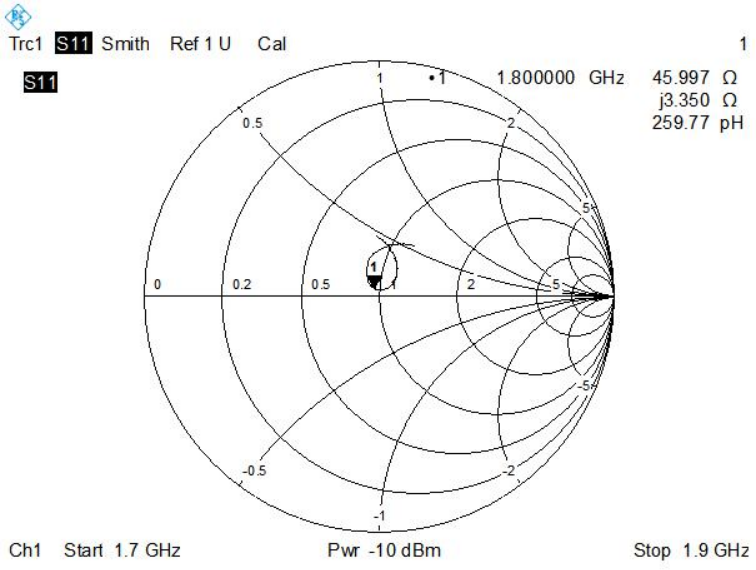

2.5 DIP 1G900

RETURN LOSS AND IMPEDANCE IN HEAD LIQUID

Meas. Results	Current Meas.	Previous Meas.	Max. Deviation
Return Loss(dB)	-27.40	-24.20	16.2 %
Impedance	52.4Ω+6.6 jΩ	51.2Ω+6.0 jΩ	1.4 Ω (Imaginary part)

Return Loss

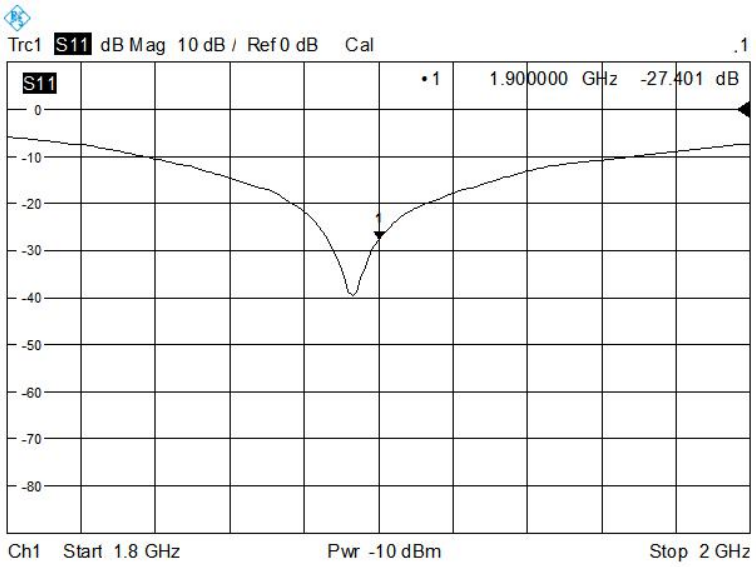

Impedance

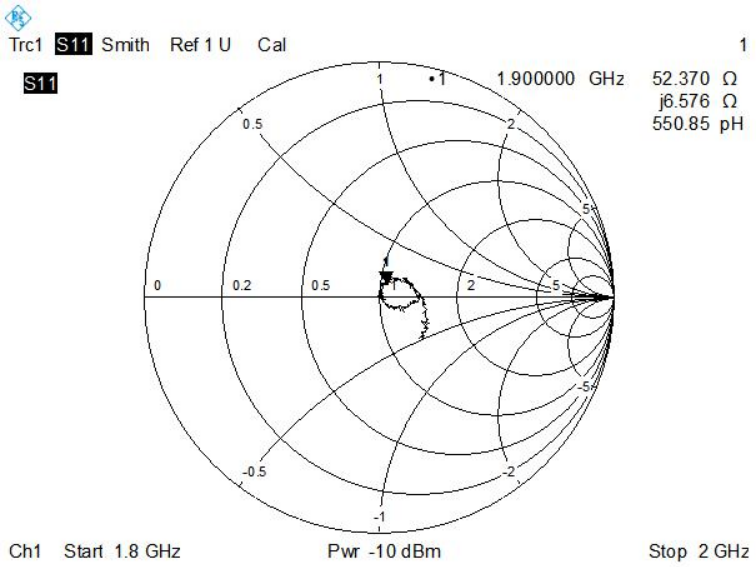

RETURN LOSS AND IMPEDANCE IN BODY LIQUID

Meas. Results	Current Meas.	Previous Meas.	Max. Deviation
Return Loss(dB)	-25.02	-22.45	12.2 %
Impedance	50.4 Ω +6.6 jΩ	46.7 Ω +6.7 jΩ	2.8 Ω (Real part)

Return Loss

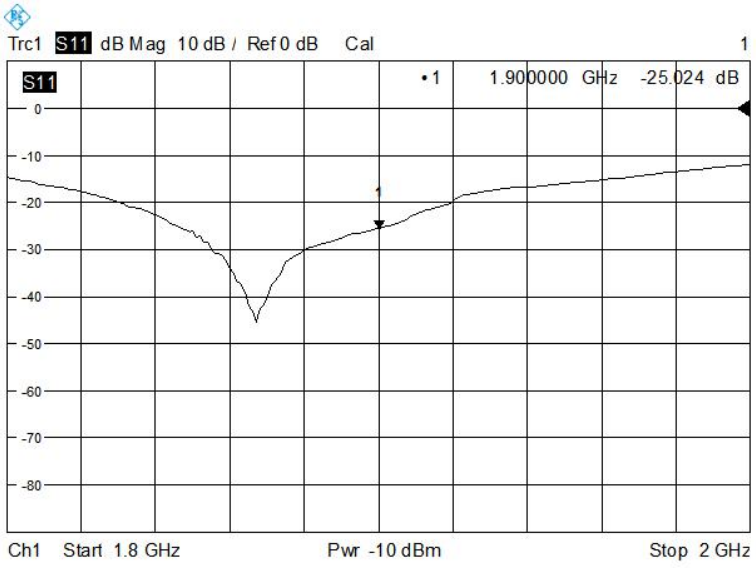

Impedance

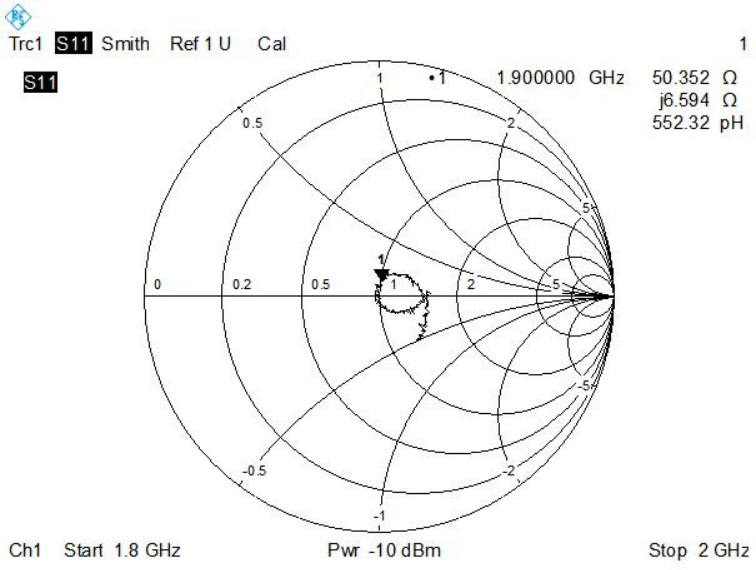

2.6 DIP 2G000

RETURN LOSS AND IMPEDANCE IN HEAD LIQUID

Meas. Results	Current Meas.	Previous Meas.	Max. Deviation
Return Loss(dB)	-24.19	-24.61	3.6%
Impedance	53.8Ω – 1.0 jΩ	54.3Ω – 4.0 jΩ	1.9 Ω (Real part)

Return Loss

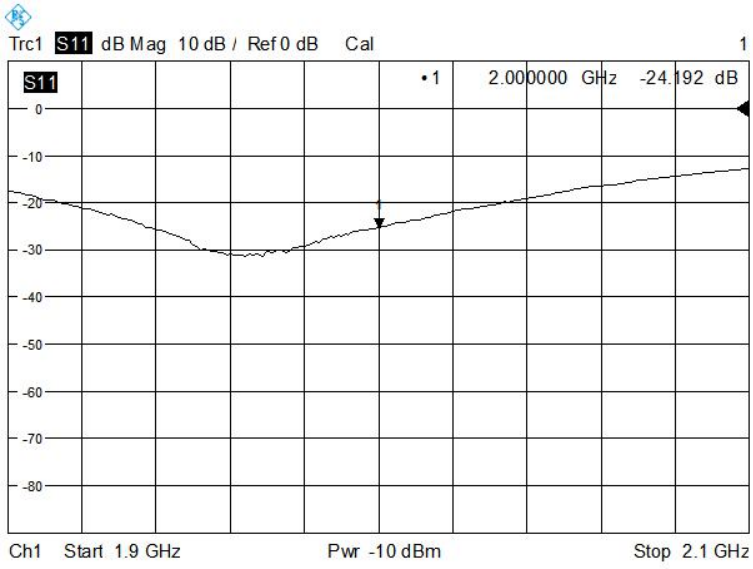

Impedance

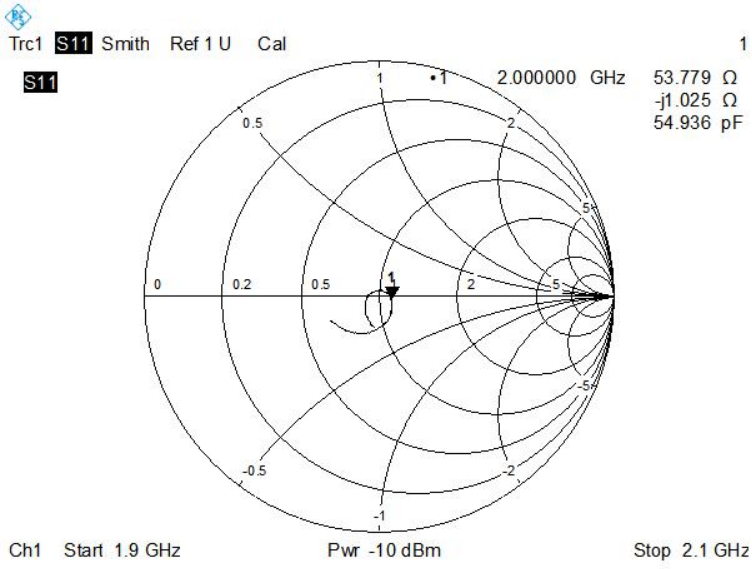

RETURN LOSS AND IMPEDANCE IN BODY LIQUID

Meas. Results	Current Meas.	Previous Meas.	Max. Deviation
Return Loss(dB)	-24.48	-24.74	3.3 %
Impedance	55.9Ω-0.3 jΩ	55.8Ω-0.3 jΩ	1.1 Ω (Real part)

Return Loss

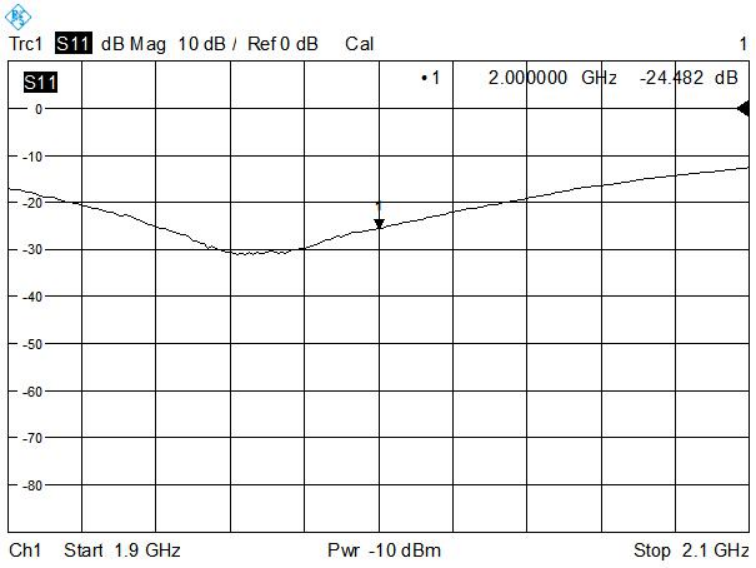

Impedance

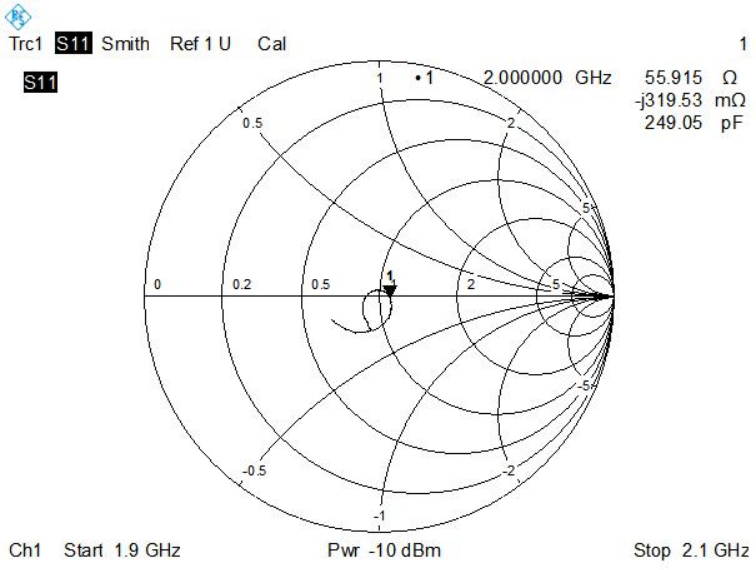

2.7 DIP 2G450

RETURN LOSS AND IMPEDANCE IN HEAD LIQUID

Meas. Results	Current Meas.	Previous Meas.	Max. Deviation
Return Loss(dB)	-24.10	-24.82	3.8 %
Impedance	43.2 Ω + 1.1 jΩ	44.3 Ω + 0.2 jΩ	1.1 Ω (Real part)

Return Loss

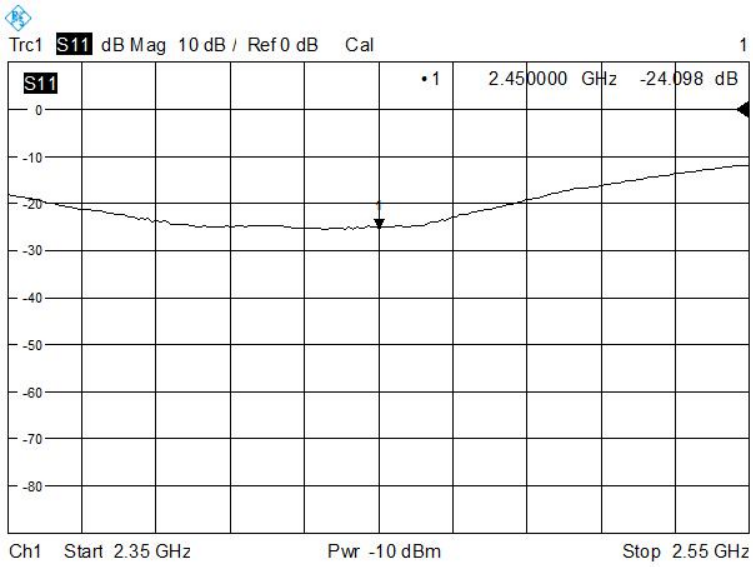

Impedance

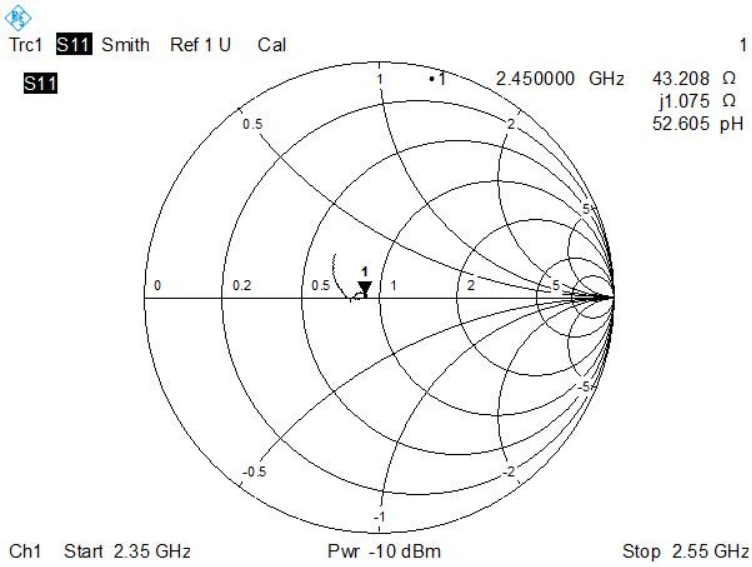

RETURN LOSS AND IMPEDANCE IN BODY LIQUID

Meas. Results	Current Meas.	Previous Meas.	Max. Deviation
Return Loss(dB)	-30.26	-31.92	2.5%
Impedance	50.8 Ω - 1.9 jΩ	47.5 Ω - 0.4 jΩ	2.1 Ω (Real part)

Return Loss

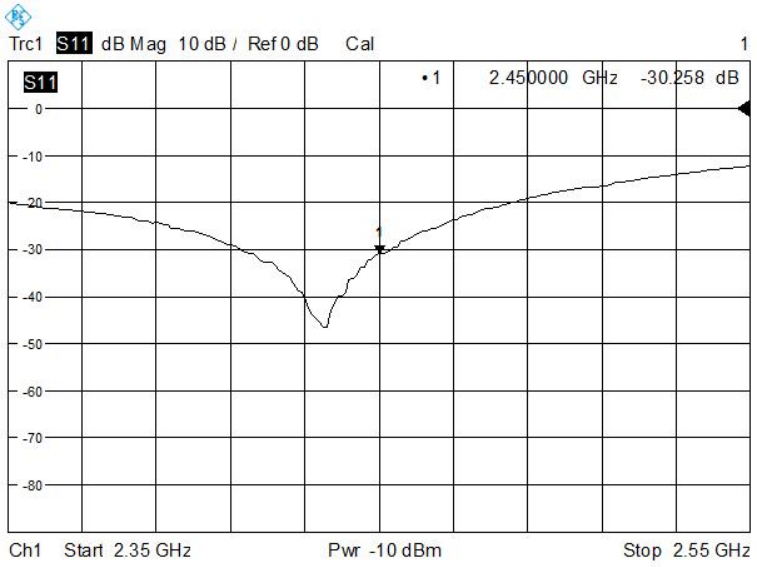

.0

Impedance

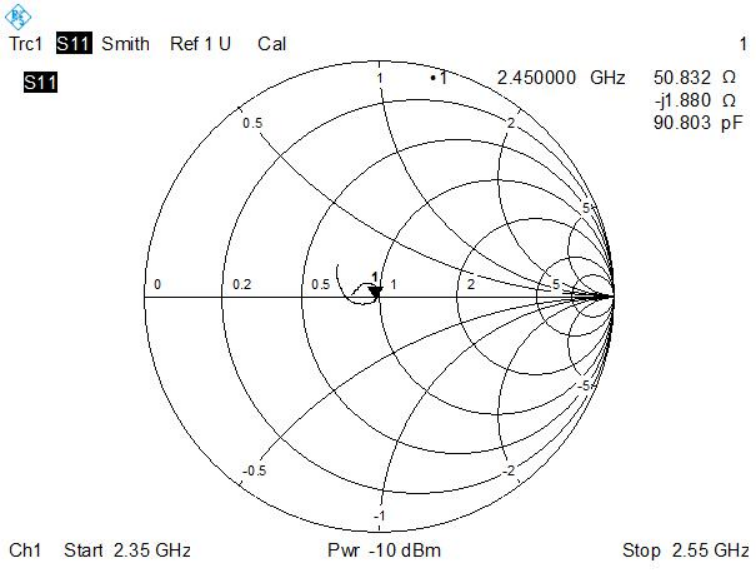

2.8 DIP 2G600

RETURN LOSS AND IMPEDANCE IN HEAD LIQUID

Meas. Results	Current Meas.	Previous Meas.	Max. Deviation
Return Loss(dB)	-21.23	-21.53	4.8%
Impedance	46.2 Ω +7.0 jΩ	46.1 Ω +7.4 jΩ	0.8 Ω (Imaginary part)

Return Loss

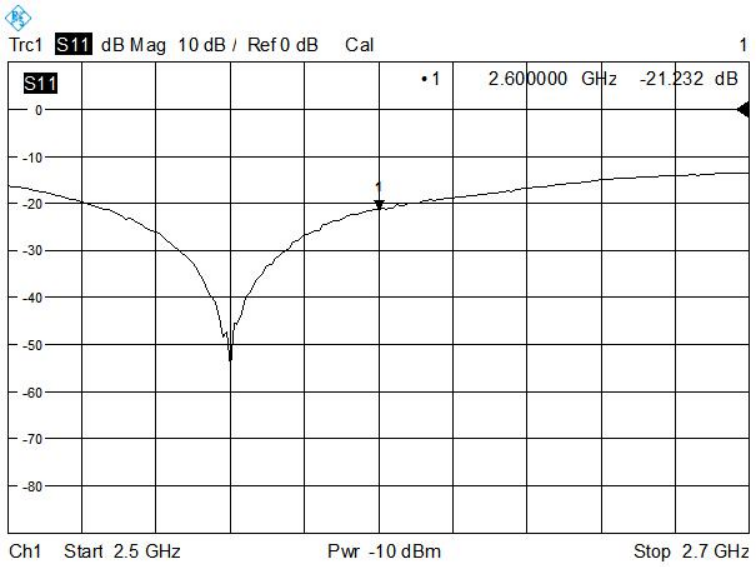

Impedance

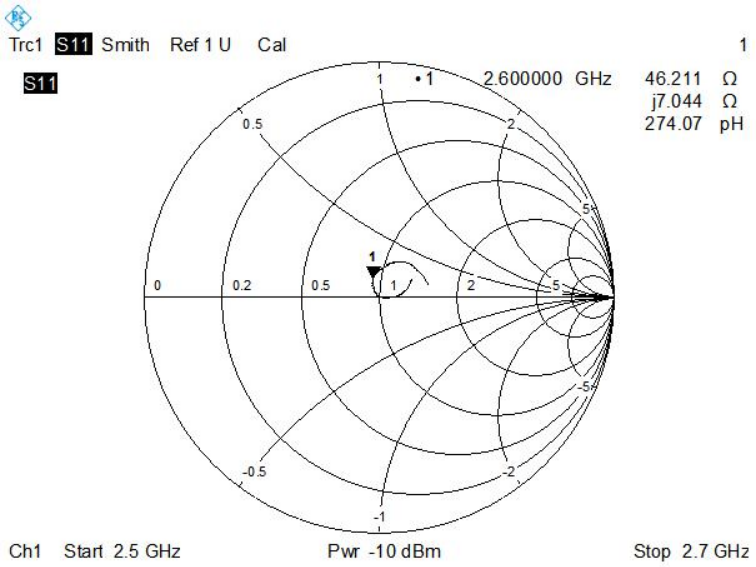

RETURN LOSS AND IMPEDANCE IN BODY LIQUID

Meas. Results	Current Meas.	Previous Meas.	Max. Deviation
Return Loss(dB)	-23.27	-21.76	4.0 %
Impedance	48.8Ω +5.0 jΩ	44.2Ω +5.7 jΩ	2.7 Ω (Real part)

Return Loss

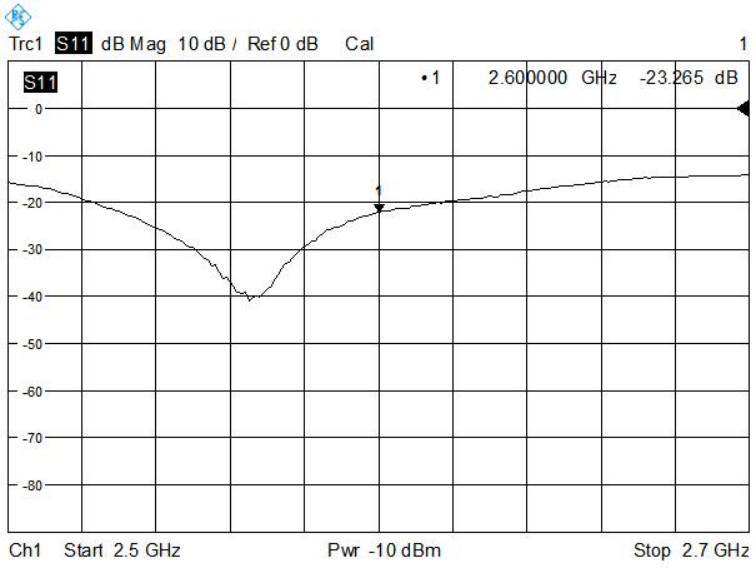

Impedance

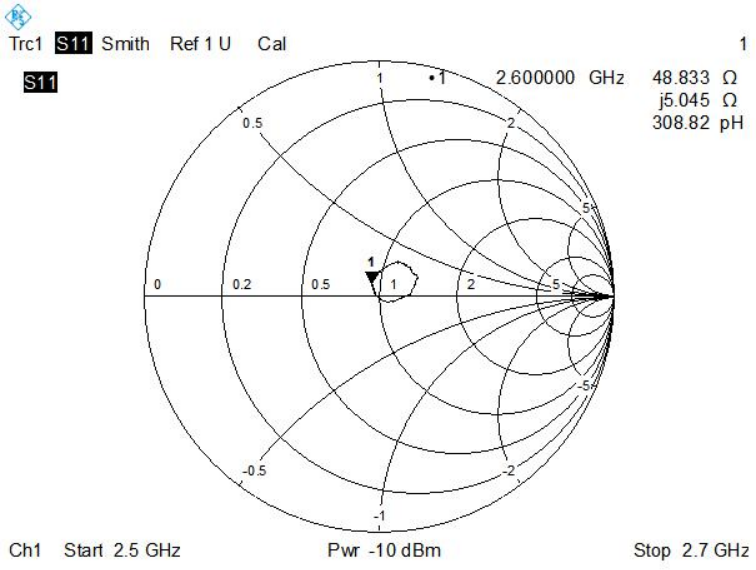

3 WAVEGUIDE IMPEDANCE AND RETURN LOSS

The waveguide are designed to have low return loss when presented against a flat phantom at the specified distance. A Vector Network Analyzer was used to perform a return loss measurement on the specific waveguide when in the measurement location against the phantom and the distance was specified by the manufacturer with a special, low loss and low relative permittivity spacer.
The impedance was measured at the SMA-connector with the network analyzer.

3.1 SWG5500

RETURN LOSS AND IMPEDANCE IN HEAD LIQUID

Frequency (MHz)	Return Loss(dB)	Requirement (dB)	Impedance
5200	-8.6	-8.0	30.6Ω+13.1jΩ
5400	-13.3	-8.0	73.0Ω-6.3jΩ
5600	-14.7	-8.0	36.8Ω-1.1jΩ
5800	-13.0	-8.0	65.2Ω+7.8jΩ

Return Loss

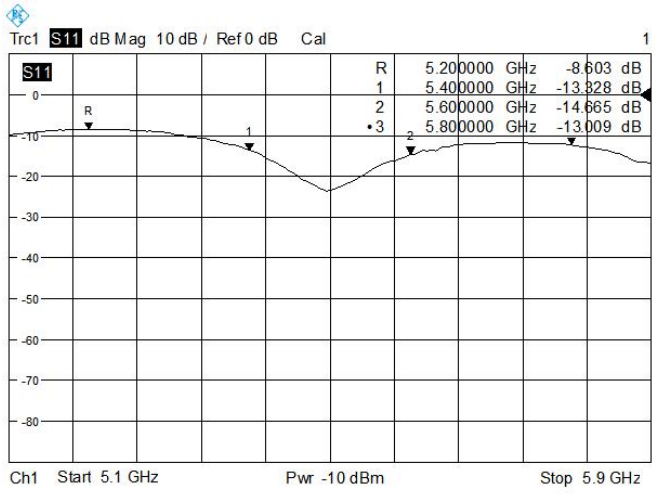

Impedance

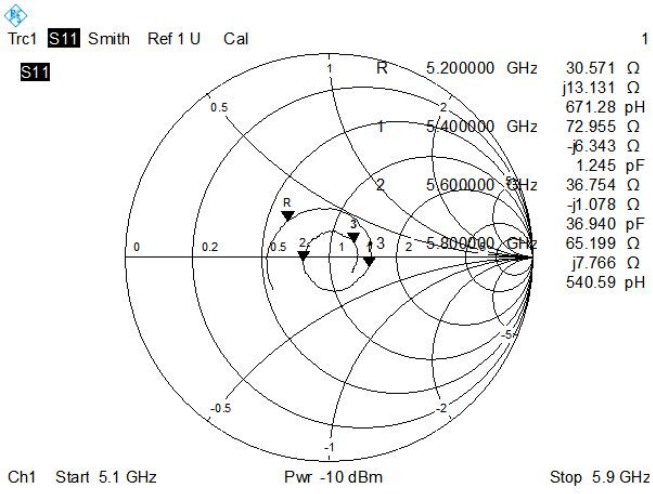

RETURN LOSS AND IMPEDANCE IN BODY LIQUID

Frequency (MHz)	Return Loss(dB)	Requirement (dB)	Impedance
5200	-10.5	-8.0	32.1Ω+14.5jΩ
5400	-12.5	-8.0	78.8Ω-9.9jΩ
5600	-15.4	-8.0	37.9Ω-3.0jΩ
5800	-15.5	-8.0	63.4Ω+13.8jΩ

Return Loss

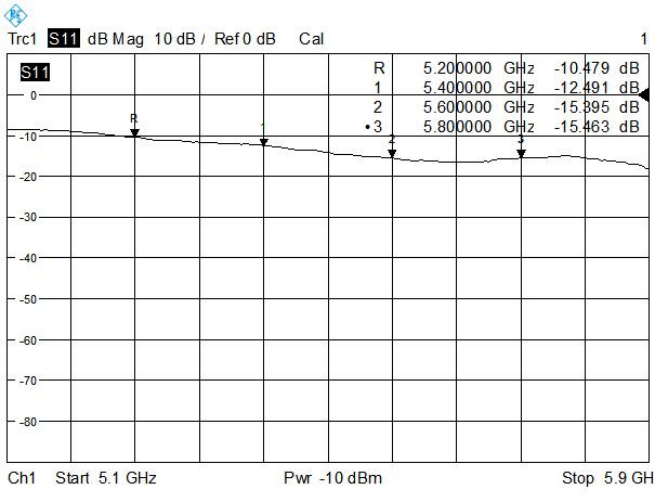

Impedance

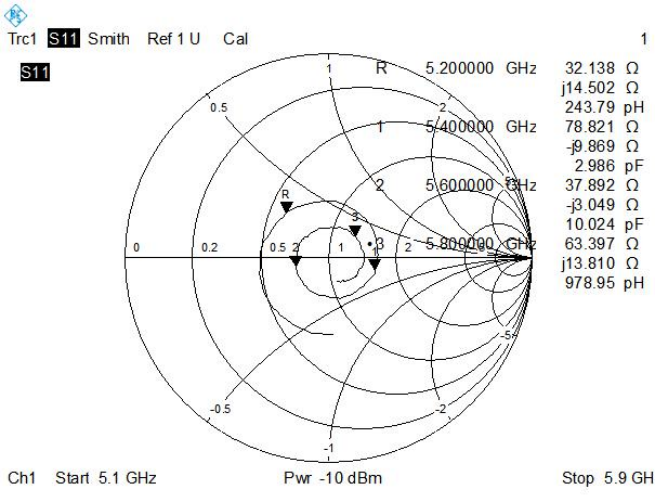

--END OF REPORT--