Warsaw 28.06.2019

Technical documentation

Gateway

type V2

Person responsible

Marcin Bocian

RND team responsible for the design

Piotr Barszczewski, Marcin Bocian

Ubudu SAS

5 rue de Liege

75009 Paris, France

© 2017 Ubudu,Inc. All Rights Reserved

Index

Index	**2**
Device description	**3**
Specification	**3**
Block diagram of the device	**5**
Photos of the product	**6**
Label	**7**
Attachments	**8**

© 2017 Ubudu,Inc. All Rights Reserved

Device description

Gateway (type V2) has been designed to act as a gateway between network (TCP/IP protocol) and USB devices.
Based on submodules:

- Carambola2 (MCU/NETWORK)
- SIlvertel AG9700 (POE)
- USB HUB

Anodised aluminium enclosure is used.
Device is turned off by disconnecting DC plug or ETH connector (when POE powered). Normal work is indicated by orange LED placed on ETH connector, active ethernet connection is indicated by green LED.

Specification

Electrical specification:	• Power source: 5VDC, max output 3A or POE class 0 (48VDC, 15.4W)
	• Power consumption:
	  ○ Without load: 0.4A
	  ○ Witch load: 0.7A
	• Working temperature: 0 : +40 [°C]
	• MIPS 24k 400MHz CPU
	• Memory: 16 MB Flash and 64 MB DDR2 RAM
	• RF interface: WIFI
	  ○ max RF output power < 20dBm
	  ○ working frequency: 2412 : 2484 [MHz], 802.11 b/g/n, 2.4 GHz
	• 7-Port USB Hub

Connectors:	Front panel: • DC (barrel jack 2.5/5.5) • RJ45 (Ethernet) • SMA (dedicated antenna rn-sma-s, gain < 0.6dBi) Back panel: • 7 x USB
Software:	Operating system: • customized OpenWRT based Linux Software options • V1: Python based server • V2: Optimized server written in C

© 2017 Ubudu,Inc. All Rights Reserved

Mechanical specification:	Dimensions: 163,54 x 94,10 x 32 (L x l x H) [mm] 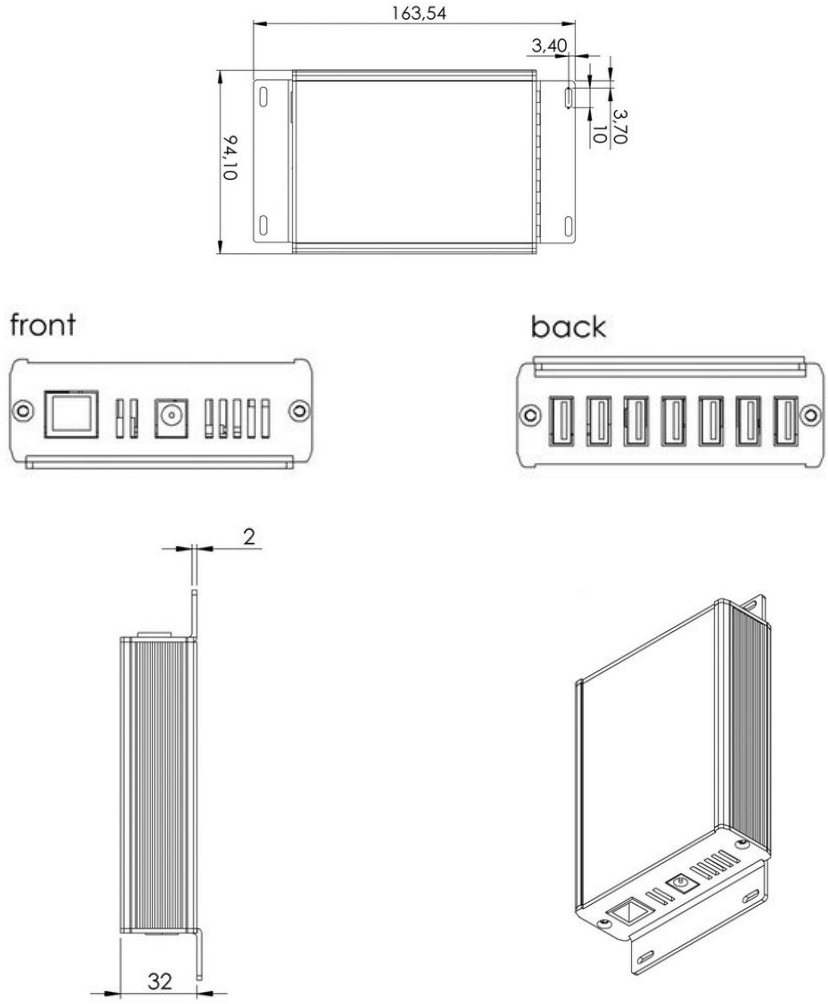

© 2017 Ubudu,Inc. All Rights Reserved

Block diagram of the device

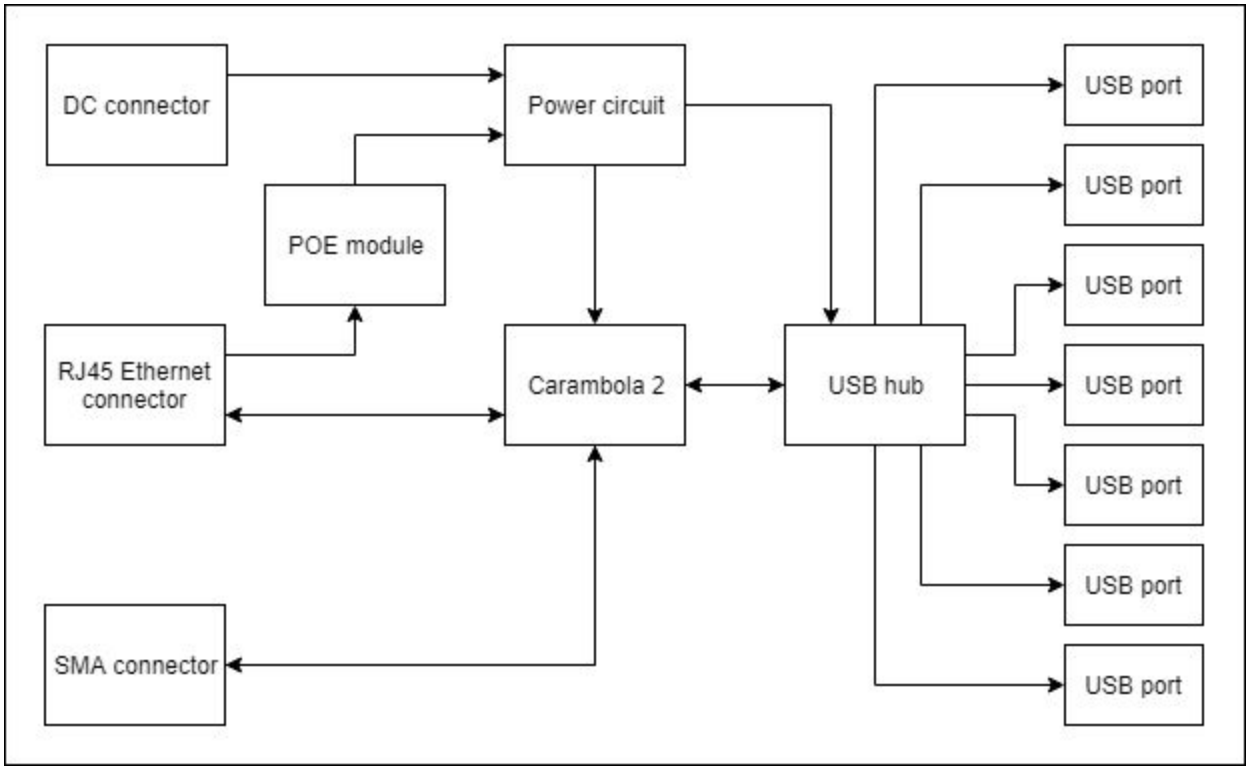

© 2017 Ubudu,Inc. All Rights Reserved

Photos of the product

© 2017 Ubudu,Inc. All Rights Reserved

Label

The device is marked with following label:

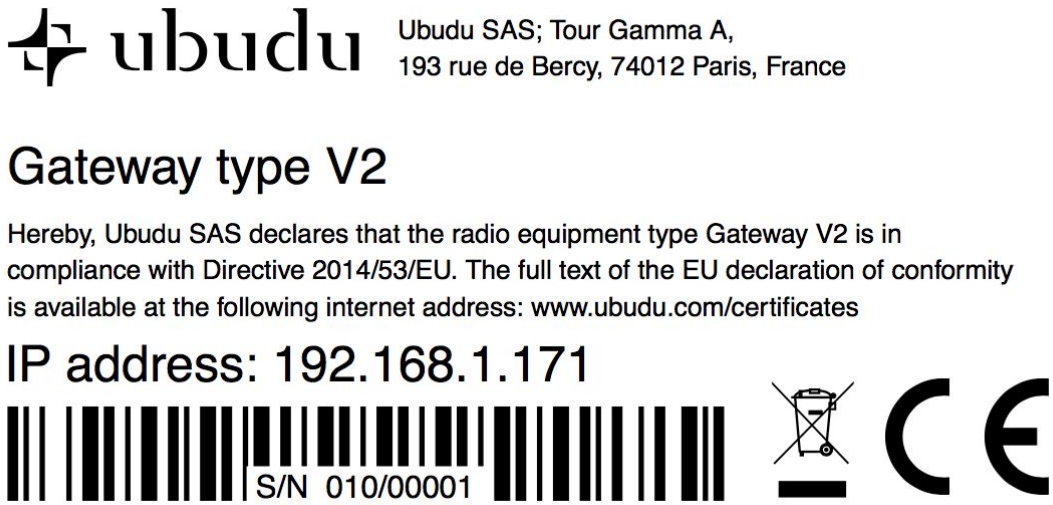

© 2017 Ubudu,Inc. All Rights Reserved

Attachments

1. *filled form* - ETSI_EN_300_328_form_gateway_V2
2. *folder* PCB which contains: electrical schematic, BOM, PCB layout
3. *folder* datasheets which contains: datasheets of used parts and PCB components
4. *folder* pre-CE which contains documents that confirm CE compatibility of used modules

FCC Warnning:
This equipment has been tested and found to comply with the limits for a Class B digital device, Pursuant to part 15 of the FCC Rules. These limits are designed to provide reasonable protection against harmful interference in a residential installation. This equipment generates, uses and can radiate radio frequency energy and, if not installed and used in accordance with the instructions, may cause harmful interference to radio communications. However, there is no guarantee that interference will not occur in a particular installation. If this equipment does cause harmful interference to radio or television reception, which can be determined by turning the equipment off and on, the user is encouraged to try to correct the interference by one or more of the following measures:

• Reorient or relocate the receiving antenna.
• Increase the separation between the equipment and receiver.
• Connect the equipment into an outlet on a circuit different from that to which the receiver is connected.• Consult the dealer or an experienced radio/TV technician for help.

Caution: Any changes or modifications to this device not explicitly approved by manufacturer could void your authority to operate this equipment.

This device complies with part 15 of the FCC Rules. Operation is subject to the following two conditions: (1)This device may not cause harmful interference, and (2) this device must accept any interference received, including interference that may cause undesired operation.
This equipment complies with FCC radiation exposure limits set forth for an uncontrolled environment. This equipment should be installed and operated with minimum distance 20cm between the radiator and your body.

© 2017 Ubudu,Inc. All Rights Reserved