TRUMPET

REAL EAR MEASUREMENTS SYSTEM
AUDIOMETER

USER MANUAL

Read this manual carefully before using the instrument. Pay particular attention to the instructions given in Chapter 1 ("Safety: warnings and information") and in Chapter 3 ("Installation").

Internal inspection and servicing of the instrument must be entrusted entirely to technicians approved by Inventis S.r.l.

Copyright: Inventis S.r.l. is the owner of the copyright on this manual. It is forbidden to copy, reproduce or alter the manual, in its entirety or in part, without the express written authorization of Inventis S.r.l..

Inventis ® is a registered trademark owned by Inventis S.r.l..

CE
0123

Inventis S.r.l.
Corso Stati Uniti, 1/3
35127 Padova, Italia
Tel.: 049.8962844
Fax: 049.8966343
www.inventis.it
info@inventis.it

Revision: **17**

Date: **24/06/2020**

Summary

Summary.....*v*
CHAPTER 1 Safety: warnings and information *1*
1.1 User Manual **1**
1.2 Operator responsibilities **1**
1.3 Intended use of the device **2**
1.4 Indication for use and end users of the device..... **2**
1.5 Precautions **3**
1.6 Disposal **6**
1.7 Conformity..... **7**
1.8 FCC/ISED use restrictions and warnings..... **7**
1.9 Symbols on labels **9**
CHAPTER 2 Introduction *11*
2.1 Description of the product..... **11**
2.2 Accessories **13**
2.3 Preparation for an REM test **19**
CHAPTER 3 Installation..... *31*
3.1 Connections..... **31**
CHAPTER 4 Maintenance *39*
4.1 Calibration and equalization (REM)..... **39**
4.2 Periodic checks **40**
4.3 Cleaning and maintenance of transducers..... **40**

4.4 Replaceable parts 41

4.5 Repairs and technical assistance..... 42

4.6 Enable new licenses..... 42

4.7 Firmware upgrade 43

4.8 Calibration of microphones by code..... 43

APPENDIX A: Technical Specifications..... 45

REM specifications 45

Audiometer specifications..... 47

Other specifications..... 53

APPENDIX B: Specifications of speaker for free field tests 59

APPENDIX C: Troubleshooting 61

APPENDIX D: Electromagnetic emissions 65

CHAPTER 1

Safety: warnings and information

1.1 USER MANUAL

Be sure to read this manual through completely, so that all of the features offered by the Trumpet instrument can be used to their full potential. In particular, be sure to read this chapter in its entirety, as it contains information and warnings that are of fundamental importance in ensuring safe and correct use of the device.

The safety warning symbol illustrated below is used in this manual to draw the attention of the reader to information of particular importance in matters of safety, and to guard against incorrect use.

1.2 OPERATOR RESPONSIBILITIES

The Trumpet device guarantees consistent and dependable performance only when used in accordance with the instructions and procedures described in this manual.

In the event of the device malfunctioning and needing to undergo repair or maintenance work, it must be disconnected from the electrical power supply, and not used again until after this work has been completed. When defective or failed parts must be renewed, accept only original replacement parts supplied by Inventis s.r.l. Any repairs must be entrusted exclusively to Inventis or to service technicians approved by Inventis.

No parts of the device must be modified or replaced without authorization from Inventis.

The user of the device assumes full responsibility for any malfunction resulting from improper use or operation, likewise from maintenance or repair work performed by third parties other than Inventis s.r.l. or Service Centres approved by Inventis. Inventis s.r.l. and approved Service Centres will answer for the performance and reliability of the equipment only if:

1. adjustments, modifications or repairs have been entrusted to persons authorized by Inventis;
2. the electrical system and earthing of the installation are in compliance with the specifications of standards for electro-medical appliances.

1.3 INTENDED USE OF THE DEVICE

Trumpet is a real ear measurement system. A real ear measurement system allows the determination of the intensity of sounds reaching the tympanic membrane of the patient. To this end it uses a couple of microphones, one located at the level of the patient's earlobe (the reference microphone), and one inserted in the patient ear canal through a silicon tube (the probe microphone). The operator, using the system, delivers to the patient sound stimuli different in intensity and in frequency content, and measures the intensity of the sound received by the two microphones. A real ear measurement system is generally used to quantify the gain provided by a hearing aid, when this is worn by the patient.

Trumpet can be also an audiometer. An audiometer is a device that helps the operator in defining the patient's auditory sensitivity by generating and delivering to the patient sound stimuli of different types and intensities for diagnostic purposes.

1.4 INDICATION FOR USE AND END USERS OF THE DEVICE

Trumpet is intended for use by healthcare ENT professionals in hospitals, ENT clinics and audiology offices or by hearing care professionals in conducting hearing evaluations, in assisting in diagnosis of possible otologic disorders, and in performing the verification of fitting of a hearing aid.

There is no patient population restriction in the use of the device; always be sure to perform an otoscopy before using the device.

These tests must be conducted in a quiet environment to avoid artifacts and to ensure that errors are not committed when determining the hearing threshold.

1.5 PRECAUTIONS

To ensure correct and safe use of the device, the following precautions must be observed.

1.4.1 Installation and general precautions

Make certain that the required ambient conditions are met (during transport, storage and operation).

The Trumpet will not be protected if exposed during use to flammable anaesthetic gases or similar products. Risk of explosion.

Avoid installing and using the device near sources of strong electromagnetic fields: these could interfere with the operation of the equipment.

Use only original accessories supplied by Inventis s.r.l., unless specifically indicated otherwise.

Use only the power adapter supplied by Inventis s.r.l.

The Trumpet is a medical device: if connected to a computer (or any external device) located within the "patient area" (as defined in EN 60601-1-1), this likewise must be a medical device, or protected by an isolating transformer, in order to ensure that the combination of computer (external device) + Trumpet is in compliance with EN standard 60601-1-1.

The Trumpet can be used in conjunction with a soundproof booth to conduct tests under optimum acoustic conditions. Before connecting the instrument to a soundproof booth, check that the sockets are compatible with the specifications prescribed for each connector.

The Trumpet has been tested under the following ambient conditions:
Temperature between 18 °C and 28 °C
Relative humidity between 20% and 80%
Atmospheric pressure between 81.3 kPa and 106.3 kPa.

The Trumpet is designed for use after being positioned on a stable work surface (such as a desk) or a suitable supporting structure (such as a stand).

The Trumpet must be installed and operated taking account of the information regarding electromagnetic compatibility (EMC) provided in Appendix D of this manual

The proximity of portable and mobile appliances used for RF communications can affect the operational efficiency of the Trumpet box. Refer to the information regarding electromagnetic compatibility (EMC) provided in Appendix D of this manual.

1.4.2 Calibration

The calibration of the audiometer and the REM probes is dependable only for the transducers supplied with the instrument. If a transducer is replaced, the instrument must be recalibrated.

The calibration of the audiometer and the REM probes is dependable for transducers supplied with the product, if connected directly to the instrument, without any interposition of extension leads and without the passage from connectors to panel (as habitually occurs in soundproof booth installations). If the transducers are not connected directly to the Trumpet , a new calibration procedure will be required before the instrument is used.

Calibration of the output in free field conditions can be considered dependable as long as the acoustic properties of the surroundings are not altered significantly. If this condition cannot be maintained, or the instrument is moved, a fresh calibration procedure will be required.

When conducting audiometry tests, the presence of a transducer that has not be calibrated will be flagged by the software. It will not be possible to present any stimulus to the patient using transducers that have not been calibrated.

Take note of the calibration interval indicated for the audiometer and the REM probes. Use of the instrument beyond the calibration interval expiry date can lead to unreliable diagnoses.

1.4.3 Hygiene and infections

The earpieces of ER-3C earphones are disposable; do not use the same earpiece for different patients. Dispose of earpieces after use.

Disinfect the cushions of headphones between one patient and the next, otherwise there is the risk that infections could be passed on.

The silicone tubes connected to the microphone of REM probes are disposable; do not use the same tubes for different patients, as there is the risk that infections could be passed on. Dispose of tubes after use.

Probe tubes can be reused for the same patient: clean using a cloth moistened lightly with alcohol before inserting into the ear. Check also that there are no obstructions internally of the tube: if the bore is not completely clear, use a new tube.

Use only biocompatible silicone tubes supplied by Inventis srl.

An ear inspection must always be performed before inserting the probe tube, to make certain that the auditory canal is free of any obstruction caused by accumulations of wax, and that there is no inflammation or possible infection.

1.4.4 Avoiding discomfort for the patient

The Trumpet is capable of generating pure tones at an intensity potentially harmful to the patient (up to 90-100 dB SPL). Take particular care over the intensity of the tone before presenting it: studies have shown that exposure to a sound reaching the auditory canal at an intensity greater than or equal to 85 dB SPL for more than 7 hours can result in damage to hearing, but if

these levels are amplified by a hearing aid, the same kind of damage can occur in as little as 30 seconds.

To avoid any such risks when conducting an REM test, make certain that the thresholds of the hearing aid have been set correctly, if necessary after running the MPO (Maximum Power Output) test using the relative function included in the Maestro software application (refer to *Maestro – Fitting and hearing aid test functionalities – User Manual*). At all events, the software includes an option for checking that UCL (UnComfortable loudness Level) values attributed to the patient are not exceeded for a given length of time, which interrupts the sound output if such a situation should occur (refer to *Maestro – Fitting and hearing aid test functionalities – User Manual* for directions on how to enable or disable this option). If the user has an audiometer license, it is possible to determine the UCL thresholds for the patient (refer to *Maestro – Impedance audiometry functionalities - User manual*).

During the course of an audiometry test, the system will prompt for further confirmation before the intensity of the sound emitted can be increased to a level higher than 100 dB HL.

When conducting REM tests at high levels, used to verify the limits of the hearing aid (as in the case of MPO), the duration of the emission must not exceed 15 seconds.

It is important to remain watchful for any adverse reaction of the patient, so that action can be taken swiftly if clear signs of discomfort or pain are shown during the course of the test, either interrupting the signal at source or distancing the transducer from the test area.

1.6 DISPOSAL

Like any other electronic device, the Trumpet contains certain extremely hazardous substances such as cadmium or mercury, albeit in extremely small proportions. If released into the normal refuse collection system without suitable preliminary treatment, these substances can cause serious damage to the environment and to health. At the end of its service life, accordingly, each component of the device must go through a sorted collection process.

This means that the user should deliver (or despatch) waste items to the sorted collection centres set up by local authorities, or alternatively, hand them back to the dealer when purchasing a new appliance of the same or similar type.

Thanks to the sorted collection of waste items and the subsequent processing, recovery and disposal operations they undergo, appliances can be made from recycled materials, and any negative impact of improper waste management on the environment and on health can be suitably limited.

1.7 CONFORMITY

The Inventis Trumpet device is a class II device, in accordance with Annex IX of the medical devices directive 93/42/EEC as amended and supplemented by directive 2007/47/EC.
Inventis s.r.l. is a company certified to ISO 13485.

1.8 FCC/ISED USE RESTRICTIONS AND WARNINGS

With reference to:

FCC ID: 2AVOO-RE1RA
IC: 25857-RE1RA
HVINs: Trumpet REM & AUD Wireless, Trumpet REM, Trumpet AUD, Trumpet REM & AUD, Trumpet REM Wireless

and

FCC ID: 2AVOO-RE1RAWP
IC: 25857-RE1RAWP
HVIN: WPROBE

Changes or modifications not expressly approved by the party responsible for compliance could void the user's authority to operate the equipment.

This device complies with part 15 of the FCC Rules. Operation is subject to the following two conditions: (1) This device may not cause harmful interference, and (2) this device must accept any interference received, including interference that may cause undesired operation.

This equipment has been tested and found to comply with the limits for a Class B digital device, pursuant to part 15 of the FCC Rules. These limits are designed to provide reasonable protection against harmful interference in a residential installation. This equipment generates, uses and can radiate radio frequency energy and, if not installed and used in accordance with the

instructions, may cause harmful interference to radio communications. However, there is no guarantee that interference will not occur in a particular installation. If this equipment does cause harmful interference to radio or television reception, which can be determined by turning the equipment off and on, the user is encouraged to try to correct the interference by one or more of the following measures:

- Reorient or relocate the receiving antenna.
- Increase the separation between the equipment and receiver.
- Connect the equipment into an outlet on a circuit different from that to which the receiver is connected.
- Consult the dealer or an experienced radio/TV technician for help.

Responsible party's contact located in the Canada:

Canadian Certification Consulting, Inc.
2210 Horizon Drive, Suite 17
West Kelowna, BC V1Z 3L4
Tel. No.: 1-250-575-1719
E-mail: info@can-cert.com

This device contains license-exempt transmitter(s)/receiver(s) that comply with Innovation, Science and Economic Development Canada's license exempt RSS(s). Operation is subject to the following two conditions: (1) This device may not cause interference. (2) This device must accept any interference, including interference that may cause undesired operation of the device.

L'emetteur/recepteur exempt de licence contenu dans le present appareil est conforme aux CNR d'Innovation, Sciences et Developpement economique Canada applicables aux appareils radio exempts de licence. L'exploitation est autorisee aux deux conditions suivantes: (1) L'appareil ne doit pas produire de brouillage; (2) L'appareil doit accepter tout brouillage radioelectrique subi, meme si le brouillage est susceptible d'en compromettre le fonctionnement.

ICES-003 Class B Notice -Avis NMB-003 Classe B:

This Class B digital device complies with Canadian ICES-003

Cet appareil numerique classe B est conforme à la norme Canadien NMB-003.

CAN ICES-3(B) /NMB-3(B)

1.9 SYMBOLS ON LABELS

	Name and address of manufacturer.
	Warning: the use of this instrument calls for certain precautions; to ensure safe use, consult the accompanying documentation.
	Read the operator manual.
	This symbol indicates that the product is subject to the requirements of Directive 2012/19/EU on waste electrical and electronic equipment (WEEE). In the event of this product being sold and/or scrapped, it must not be disposed of as ordinary household or industrial waste, but collected separately.
	Device with applied parts, Type B (EN60601-1)
CE 0123	*Mark indicating conformity with Council Directive 93/42/EEC concerning medical devices (as amended and expanded by Directive 2007/47/EC) – Class IIa device, notified body 0123 (TÜV SÜD Product Service GmbH).*
IP20	*IP (Ingress Protection) code: this device is protected against the penetration of objects larger than 12.5 mm; it is not protected against the penetration of liquids.*
Rx only	*Warning: under US federal law, the device can only be sold through or on the instruction of authorized healthcare professionals.*
MODEL	*Model of the device*
REF	*Catalogue code*
SN	*Serial number of the appliance. The number is made up of 13 alphanumeric characters indicating the model, series, year of manufacture and serial number. In particular, the number comprises these segments:* - *first 5 characters: Inventis product code* - *characters 6 and 7: year of manufacture ("16" denotes 2016)* - *character 8: model series* - *characters 9-13: pro serial number*
	UDI code

CHAPTER 2

Introduction

2.1 DESCRIPTION OF THE PRODUCT

The Trumpet is an REM device allowing in-situ evaluation of all the parameters required to ensure optimum fitting of a hearing aid. It is characterized by a small and lightweight set of probes, and a powerful speaker mounted to the front panel of the instrument.

The Trumpet is also a diagnostic audiometer that can be used to perform pure tone and speech audiometry by air or bone conduction.

At least one of the two modules (REM or audiometer) is purchased together with the instrument, with the option of integrating both at a later date by purchasing the relative licence.

The instrument is controlled by way of the Maestro application, which can be installed only on a Windows PC.

The following table summarizes the tests that are available with the REM module of the Trumpet:

Measurements	*Inputs*	*Outputs*
Standard/advanced Real Ear Measurements	Prerecorded files PN, WN, ISTS, ICRA	Built-in speaker
LIVE measurements	Prerecorded files PN, WN, ISTS, ICRA, live speech	Built-in speaker

During an REM test, the instrument can operate only in FF (Free Field) mode, and the power adapter must be connected (see chapter entitled 3 *Installation*).

The following table summarizes the tests that can be conducted in audiometer mode.

Test	*Channel*	*Inputs*	*Outputs*
PURE TONE AUDIOMETRY	Ch. 1	Pure tone, warble, NBN	AC, BC, FF
	Ch. 2	NBN, WN	AC, BC, FF
AUTO-THRESHOLD	Ch. 1	Pure tone	AC
SPEECH AUDIOMETRY	Ch. 1	MIC, (USB1, USB2)	AC, BC, FF
	Ch. 2	SN, WN, MIC (USB1, USB2)	AC, BC, FF
MASTER HEARING AID	Ch. 1	MIC, (USB1, USB2)	AC
	Ch. 2	MIC, (USB1, USB2)	AC
Optional tests			
QuickSIN	Ch. 1	Pure tone, warble	AC, FF
	Ch. 2	NBN	AC, FF

If the power adapter of the Trumpet is disconnected during an audiometry exam, only AC (Air Conduction) and BC (Bone Conduction) modes remain enabled, whereas FF (Free Field) mode is disabled. To enable free field mode, the power adapter must be reconnected (see Chapter 3 *Installation*). If the instrument is powered up only by way of the USB cable, the maximum limits of the enabled outputs will be reduced by 10 dB.

2.2 ACCESSORIES

The Trumpet can be supplied with all or only certain of the accessories described, depending on the module purchased. If a licence is purchased at a later time, then the corresponding accessories will also be supplied (those not included in the version of the instrument purchased initially).

The table below lists the accessories included in the relative modules.

REM version	
Trumpet unit	●
Wired REM probes	●
Set of probe parts (includes probe tubes, insertion guides and spare O-rings)	●
USB cable	●
Monitor headphones with microphone	●
Medical grade power adapter 15V/2A	●
Inventis Software Suite	●
Operator Manuals	●
RECD unit	opt.

Wireless REM version	
Trumpet unit	●
Wireless REM probes	●
Set of probe parts (includes probe tubes, insertion guides and spare O-rings)	●
USB cable	●
Monitor headphones with microphone	●
Medical grade power adapter 15V/2A	●
Inventis Software Suite	●

Operator Manuals	●
RECD unit	opt.

Audiometer version	
Trumpet unit	●
Supra-aural headphones (Telephonics TDH-39 or Radioear DD45)	●
Insert earphones (Etymotics ER-3C)	opt.
Noise-excluding enclosures (Amplivox Audiocups)	opt.
Set of connectors for external speakers	●
Bone vibrator B71	●
Patient response button	●
Monitor headphones with microphone	●
Clip-on talk-back microphone	●
Inventis Software Suite	●
USB cable	●
Medical grade power adapter 15V/2A	●
Operator Manuals	●

Compatibility has been verified only with transducers and accessories supplied by Inventis S.r.l. Do not use other transducers or accessories.

2.2.1 Probes (REM)

Two probes are located at the ends of the REM headset. Detailed description below:

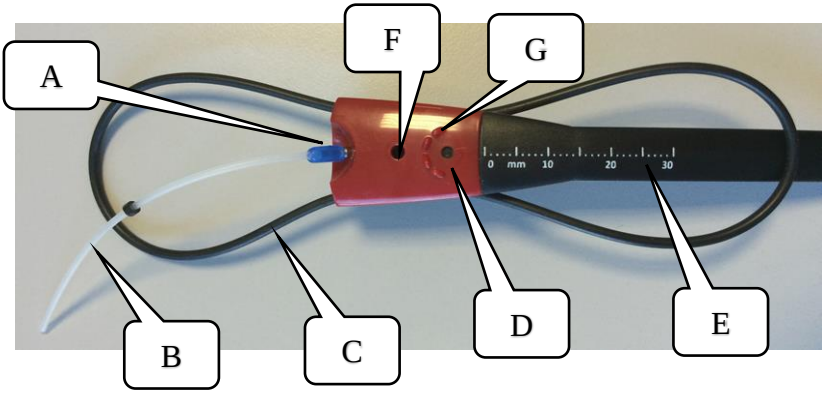

A. Housing for probe tube
B. Probe tube
C. O-ring for attachment to ear
D. Reference microphone
E. Graduated scale
F. Guide housing for insertion of tube
G. Probe calibration guides

It is advisable, where possible, to use the REM probes inserted in the headset

Insertion of probe tube

The Trumpet comes with a set of probe tubes (REM licence). To insert this accessory, position the blue part of the tube over the metal cylinder that provides the housing for the tube (A in the illustration) and push in gently until fully home.

Do not apply excessive force when inserting the tube, as this could damage the actual probe microphone.

2.2.2 Wireless probes (REM)

Alternatively to the wired probes it is possible to use the wireless probes for REM measurements:

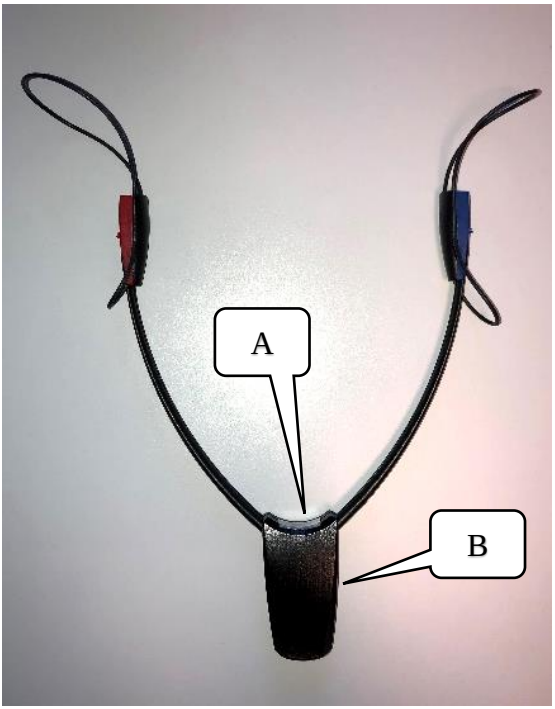

A. Button with status LED

B. Bluetooth transmitter (battery compartment on the back)

To turn the probes on it is sufficient to press the transparent button in the center. The status LED will begin to blink in blue while searching for the Trumpet, and it will become orange when it is connected to it. If the Trumpet is not found (it is necessary that the device is connected to the power supply and to a switched-on PC via USB), the probes will continue to blink in blue and will turn off after some minutes.

To charge the probes battery it is necessary to place them on the stand as shown in the following picture:

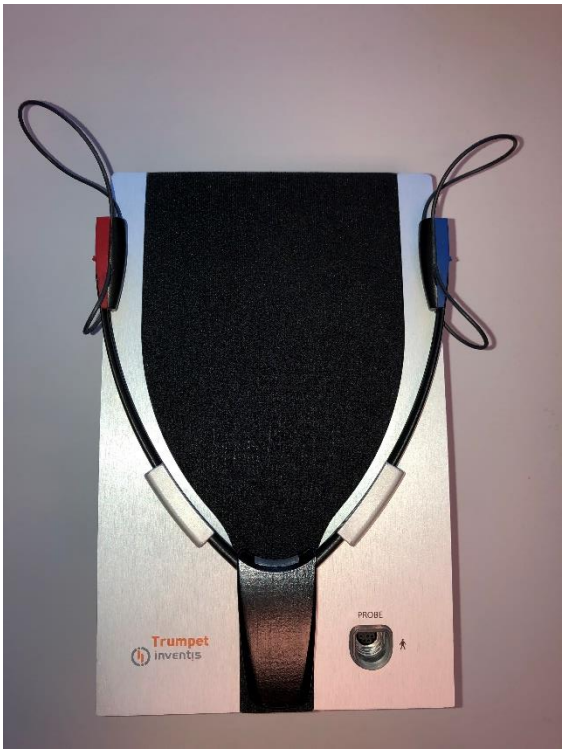

The probes LED will turn green for a short time to confirm the start of the charging phase, then it will turn orange again.
If the LED does not turn green, try to slightly change the position of the probes since they are aligned with the center of the device, or try to put them off charge position, wait 5 seconds then put them back on paying particular attention to the fact that they are correctly placed in the center of the device.
If the probes are turned off they will be automatically turned on when placed in charge position.

It is strongly advised to put the probes on charge when they are not in use, to avoid to reach a low charge level and not being able to complete the exam.

If the probes are sold together with the Trumpet they will already be paired with the device, otherwise before using them it is necessary to perform the pairing procedure:

1. Connect the Trumpet to the power supply and to a USB plug on a turned on PC;
2. Turn on the probes by pressing the transparent button in the center: the LED will blink in blue;
3. Keeping the button on the probes pushed down put them in charge position, then wait 3 seconds and release it;
4. After some seconds the probes LED will turn orange, indicating the correct completion of the procedure. Now it will be possible to use them for the exam.

Ensure that there is no other Trumpet connected to the power plug and to the USB plug in the surroundings, otherwise the probes could pair to the wrong device.

In case of any problemi it is possible to turn off the probes manually by keeping the button pressed for more than 10 seconds. They are however turned off every time that Trumpet is not in use by Maestro, unless they are in charge position.

The following table summarize the possible probes LED statuses:

Color	**Meaning**
Turned off	Probes turned off
Blue blinking	Probes searching for the Trumpet
Orange fixed	Probes connected to the Trumpet
Green (short)	Probes charge start

2.2.3 Equalization of active speaker (REM)

During the speaker equalization procedure, the headset with the REM probes must be placed in front of the speaker, at the same distance and in the same position as will be occupied by the patient's head when the test is actually conducted. For best results, it is advisable to fit the headset directly to the patient before running the equalization procedure. The distance of 1 m from the speaker is the optimum distance both for equalization purposes and for conducting the REM test. Make certain that there are no obstructions (e.g. hair) covering the microphones.
For more details, refer to the manual entitled *Maestro – Fitting and hearing aid test functionalities – User Manual*.

2.2.4 Probe tube calibration (REM)

The position for calibration of the probe microphones is indicated below (refer to *Maestro – Fitting and hearing aid test functionalities – User Manual* for further information on how to proceed with calibration). The tip of the probe tube must be inserted into the relative guides, as near as possible to the reference microphone, and the headset placed at around 1 metre from and in front of the active speaker.

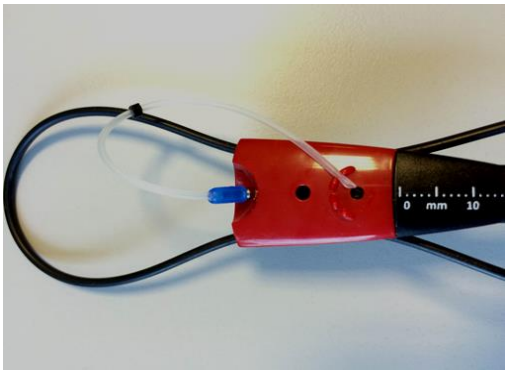

2.3 PREPARATION FOR AN REM TEST

The REM test must be conducted only by a person specialized in and authorized to perform audiology procedures. Use of the instrument by a person without the necessary expertise could result in damage to the hearing of the patient.

Change the probe for each new patient. Reusing the tube on different people could result in the spread of ear infections.

Do not push the tube too far into the patient's ear: there is the risk of perforating the eardrum. Refer to the ruler marked on the headset to determine the depth of insertion.

Always carry out an ear inspection before proceeding with the REM test, to make certain there are no obstructions in the ear that could affect the results of the examination.

2.3.1 Measurements in the ear

When preparing the patient for an REM test, observe the following procedure:

1. Position the patient at around 1 metre from and facing the speaker of the instrument, and in such a way that the ears are placed approximately at the same height as the instrument.
2. Position the black ring of the tube so that the placement corresponds to the required insertion distance (refer to the markings of the ruler on the headset as indicated in the image below). The recommended distances are:
    a. Men: 27 mm
    b. Women: 27 mm
    c. Children: 20-25 mm

NOTE: the distances can vary depending on the patient. To avoid problems, in any event, start with an ear inspection: this will give some idea as to the dimensions of the auditory canal.

3. Position the probe headset on the patient, adjusting the loops (O-rings) so that the probe is positioned just under the ear lobe.
4. Insert the probe tube into the patient's auditory canal, to the point at which the black ring reaches the intertragic notch. If resistance is encountered, do not force the tube further.

    To favour the correct insertion of the probe tube and ensure it does not snag on a wall of the auditory canal, there are insertion guides for this same purpose supplied with the instrument. Insert the guide

in the relative hole (if necessary, refer to heading 2.2.1 *Probes (REM)* for further information) and position the tube as illustrated below:

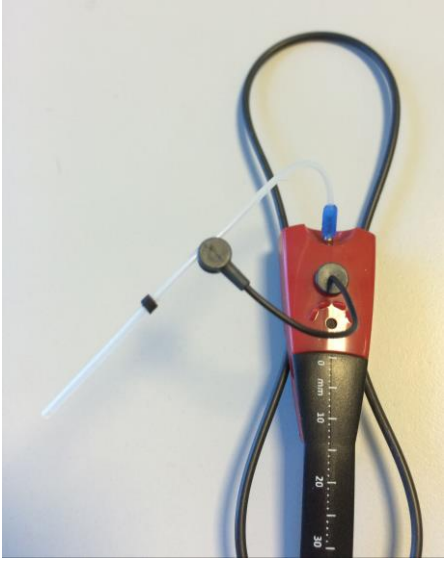

In this way it will be possible to ensure the probe tube is kept straight when inserted into the auditory canal.

5. If required for the measurement (i.e. for REAR measurements), place the hearing aid in the patient's ear, making certain that the probe tube remains in the same position and is not occluded by the hearing aid.

The correct position of the headset and the tube is illustrated in the following image:

It is very important that the probe microphones are correctly calibrated every time a new tube is used. Incorrect or failed calibrations can influence the acquisition of curves and lead to false measurements.

It is advisable, where possible, to use the REM probes inserted in the headset

2.3.2 Measurements using 2cc coupler

Should it be impossible to rely on the cooperation of the patient for the entire duration of an REM test, measurements can be acquired by way of a coupler using the RECD unit, or a Drum instrument connected to the same PC as the Trumpet.

RECD unit

Before proceeding with the test, the speaker of the RECD unit must be equalized and the microphones calibrated. The operation requires that the coupler microphone and the reference microphone, suitably aligned one with another, should be positioned on the speaker of the RECD unit as illustrated in the image below.

For further information, refer to the heading entitled *Coupler measurements* in *Maestro – Fitting and hearing aid test functionalities – User manual*.

To enable correct connection of the coupler to the various types of hearing aid available on the market (e.g., BTE, CIC, ITE, …), the accessories include different types of adapters, illustrated in the image below.

- Adapter (**1**) is designed for use with ITE, ITC and CIC hearing aids. Make certain that hearing aid is securely connected by using adhesive insulating putty.
- Adapter (**2**) allows connection of BTE type hearing aids to coupler using an ear hook.
- Adapter (**3**) is designed for use with RIC hearing aids. Here again, always use adhesive insulating putty to make certain of a secure connection.

Once the hearing aid has been suitably connected to the coupler, the test can be conducted by positioning the device on the RECD unit (aligned centrally with the loudspeaker if possible) and ensuring that the reference microphone is placed as close as possible to the hearing aid microphone, but without actually touching it. Remember also that it is not advisable to use RECD in the case of open fit hearing aids.

An example of correct positioning is shown in the following illustration.

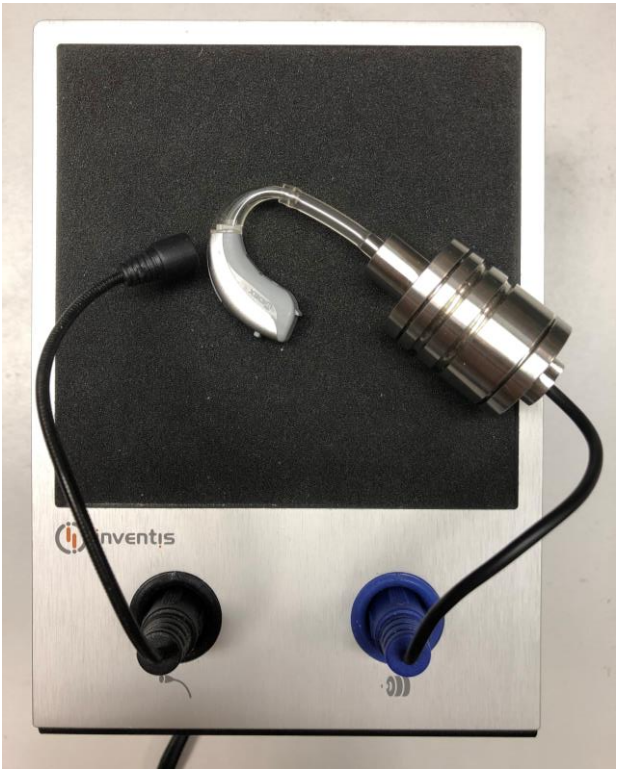

Before a fitting procedure can be carried out using the RECD unit, the operator must always begin with the acquisition of an RECD curve, so that all the measurements made with the coupler can effectively simulate those normally obtainable in the ear.
The software will enable the coupler measurement functionality only after the acquisition of an RECD curve has occurred.
The acquisition of an RECD curve involves two steps: measurement of a response in the ear and measurement of a response in the coupler. In particular, acquisition of the response measurement in the ear can be accomplished in two ways: using a disposable tip or using the earmold of the patient's own hearing aid. If the first option is selected, the probe tube must first be inserted in the auditory canal of the patient as described in Heading 2.3.1, following which the disposable tip, connected previously to the insert transducer, can be placed in the ear. This particular step must be carried out with special care, to ensure that the probe tube inserted previously is not displaced overmuch. The correct position of the tube and the transducer is illustrated in the following image:

Once the measurement in the ear has been obtained, the response in the coupler can be measured. Electing to use a disposable tip for acquisition of the measurement in the ear, the response in the coupler can be measured only with the adapter **(1)**: this situation is identified as the **HA1** configuration. Accordingly, connect the adapter **(1)** to the coupler, and the insert transducer to the tip. Finally, attach the tip to the adapter, if necessary with the aid of adhesive insulating putty to ensure the two parts are securely connected (the insulating putty need not be used if the tip covers the hole sufficiently, without leaving any gaps). The correct position is illustrated in the following image:

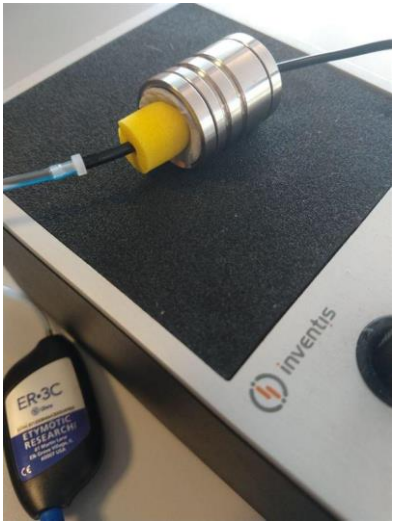

HA1-tip configuration

The response in the auditory canal can also be measured using the earmold of the patient's hearing aid, rather than a disposable tip. Likewise in this instance, the probe tube must first be inserted in the auditory canal of the patient as described in Heading 2.3.1, following which the mold, connected previously to the insert transducer, can be placed in the ear. Here again, special care must be taken during the operation to avoid displacing the probe tube inserted previously from its correct position. An example of the final set-up is illustrated in the following image:

Electing to use the patient's earmold for acquisition of the measurement in the ear, there are two distinct configurations possible for measuring the response in the coupler.
The first configuration, identified as **HA1**, requires the use of the adapter **(1)**. As with the disposable tip, connect the adapter **(1)** to the coupler, and the earmold to the insert transducer. Finally, attach the earmold to the adapter, using adhesive insulating putty to ensure that the two parts are securely connected with no gaps left between them. The correct position is shown in the following image:

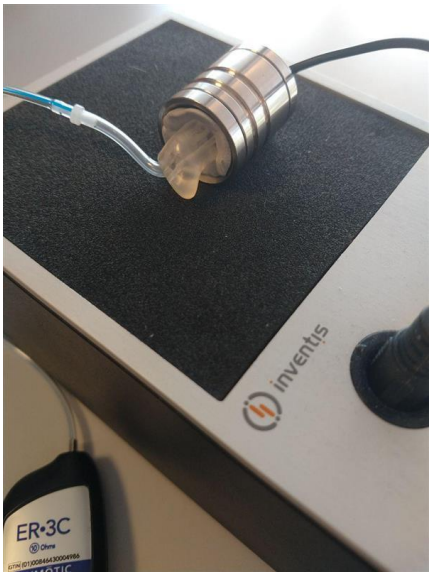

HA1-mold configuration

The second configuration, on the other hand, identified as **HA2**, requires the connection of the adapter **(2)** to the coupler. In this instance, the only action required is to connect the outlet of the adapter **(2)** to the insert transducer using the 25 mm silicone tube, as shown in the following figure:

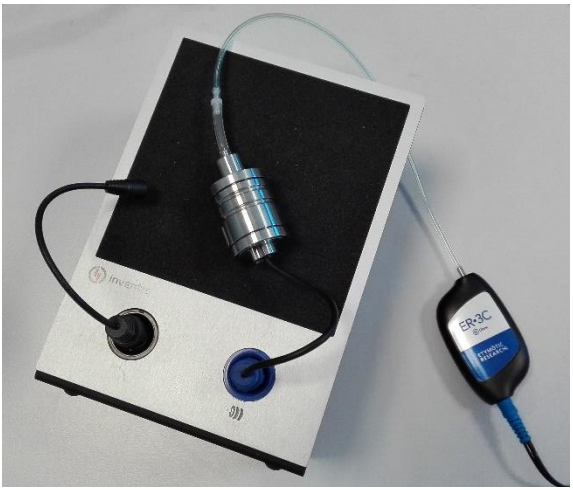

HA2-mold configuration

When both measurements have been taken, in the ear and in the coupler, the difference between them allows automatic calculation of the RECD curve, which will be used during the course of the coupler mode fitting procedure. For further details on using the Maestro software for acquisition of the RECD curve, refer to the heading entitled *RECD* in the Operator manual *Maestro – Fitting and hearing aid test functionalities – User Manual*.

Drum

To enable measurements with the coupler using the Drum instrument, the same considerations apply as for the RECD unit, since the accessories supplied with the product are the same (except for the 25 mm silicone tube, which is bent to a right angle rather than straight, but entirely similar in terms of use). The only action required is to connect the Drum to the same PC as the Trumpet.

For an overview of how the hearing aid is positioned correctly in the Drum instrument, refer to the Heading *Position the hearing aid in the test chamber* of the relative manual: *Drum – User Manual*.

Before performing an RECD measurement with the Drum, the software will check that the alignment of the microphones is still as required; if not, refer to the section on *Calibration and alignment of microphones* in the relative manual: *Drum – User Manual* .

CHAPTER 3

Installation

Whilst the installation of the Trumpet device is a relatively simple procedure, it should be entrusted to a person with the requisite skills. If the installation is not performed correctly, the system could be affected by safety problems when in use.

This chapter describes the procedure for installing the system.

Keep the packaging materials, in case the instrument should need to be sent to the dealer or to Inventis for any reason.

3.1 CONNECTIONS

3.1.1 Back Panel

Illustrated below are the sockets on the back panel of the instrument, used for the connection of accessories and of the power adapter.

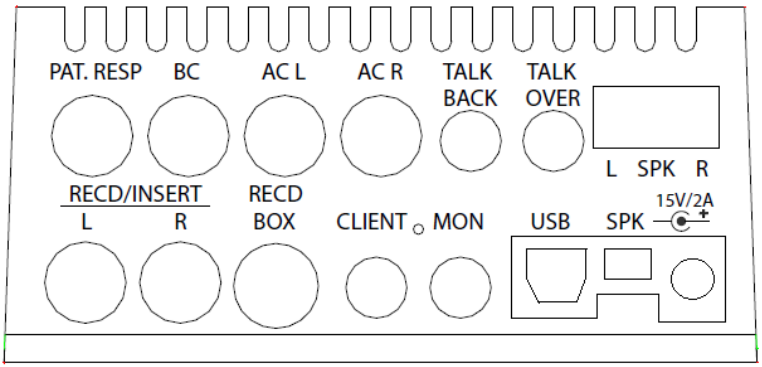

Plug the transducers and accessories into the respective sockets as indicated in the following table:

Connector	Accessory
PAT. RESP	Patient response button
BC	Bone vibrator
AC L and AC R	Supra-aural headphones (TDH-39 or DD45) for Air Conduction: right (AC R) and left (AC L)
TALK BACK	Microphone used by patient
TALK OVER	Microphone used by operator to communicate with patient
SPK L (blue) & R (red)	External speaker for free field tests: right (R, red) and left (L, blue)
RECD/INSERT L & R	RECD transducers, right (R) and left (L) or Insert earphones (ER-3C) for Air Conduction: right (R) and left (L)
RECD BOX	External speaker for coupler measurements
CLIENT	Spare, for future uses
MON	Monitor headphones for operator
USB	USB cable for connection to personal computer
SPK (green)	Spare, for future uses
15V/2A	Power adapter

Connect the power adapter to the input and to the relative power cord, which should be plugged into an a.c. mains socket supplying the voltage indicated on the adapter label.

All connections must be made with the instrument switched off, or at least before plugging in the power cord and the USB cable.

Use only the power adapter supplied by Inventis s.r.l.

Connect the device only to medical equipment or to devices equipped with an isolating transformer.

Connect the device to an electrical power line carrying a voltage between 100 V and 240 V, with frequency between 50 Hz and 60 Hz.

3.1.2 Front Panel

A socket located at the bottom right hand corner of the Trumpet (the only connector on the front panel) is used to plug in the wired probes used for REM measurements.

Connector	Accessory
PROBE	Set of wired probes used for REM measurements

A Led positioned around the connector indicates the communication status between the Trumpet and the computer. Whenever the device is communicating with the PC controlling it, the Led will remain alight.

NOTE:
To conduct an REM test, the operator must connect only the USB cable and the power adapter to the rear panel — also the monitor headphones (optional), to the MON input — and the set of probes to the front panel (in case of wired probes).

3.1.3 Connection diagrams for REM mode

Wired REM probes	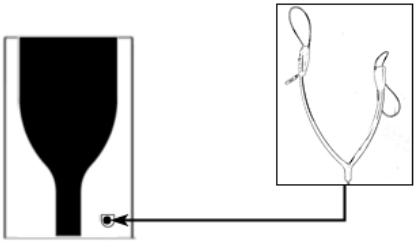
Communication with patient	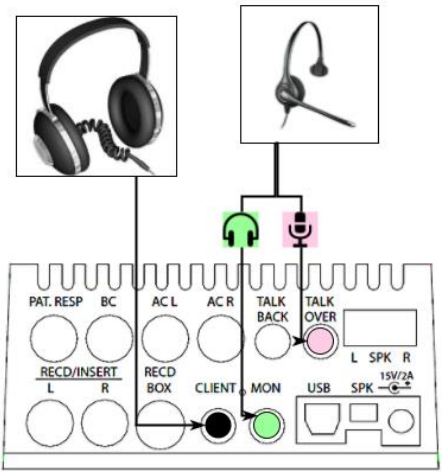
RECD measurements	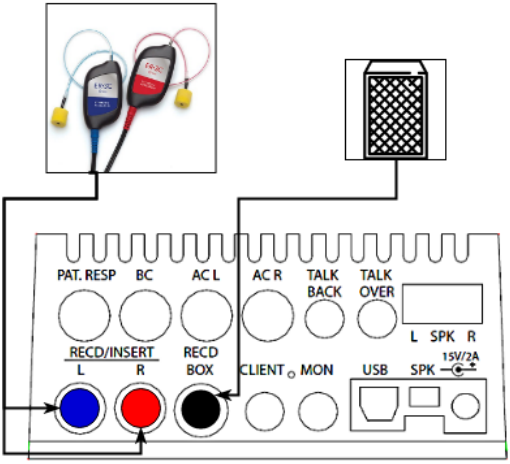

PC/Power supply	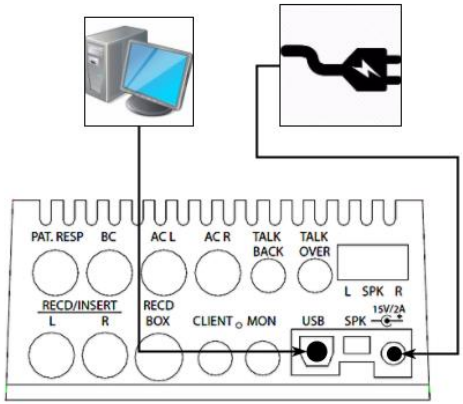

3.1.4 Connection diagrams for audiometry mode

AC/BC transducers	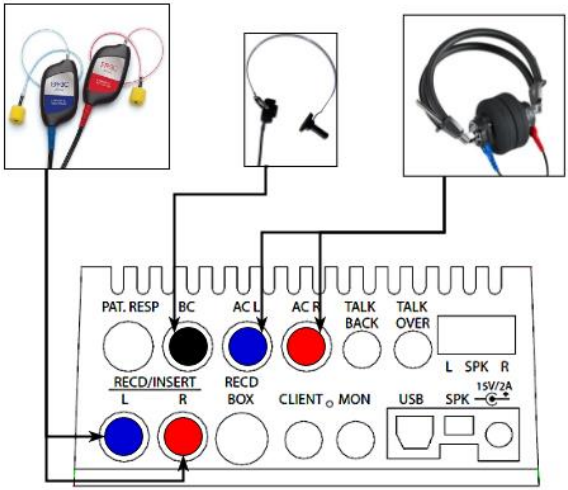

Speakers for free field tests	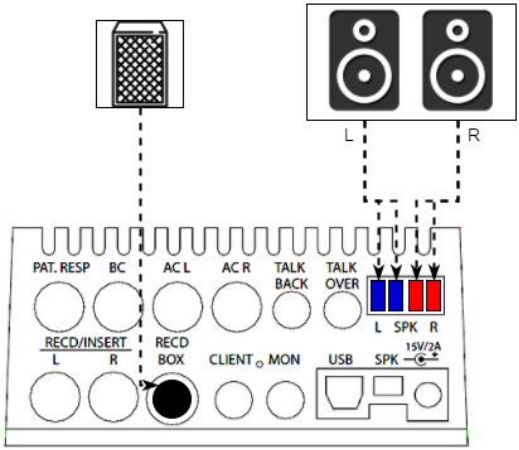 Option 1: External speakers Option 2: RECD speaker + built-in Trumpet speaker (*) Option 3: Built-in Trumpet speaker only (*) In this configuration, the built-in speaker functions as the left hand and the RECD speaker as the right hand. Before using any one of the three options, calibration of the relative speakers in free field conditions is required. Options 1 and 2 must be enabled by an authorized technician during the calibration procedure.
Communication with patient	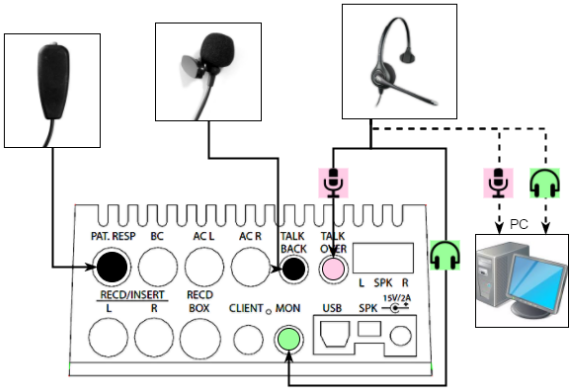

PC/Power supply	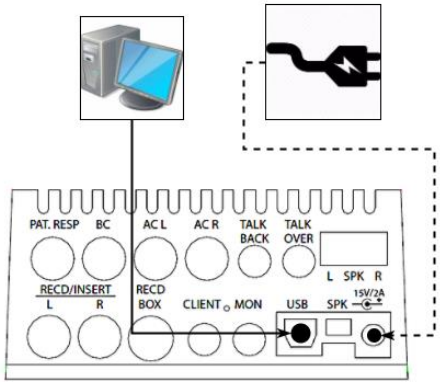

3.1.5 Positioning the device

The Trumpet can be positioned:

- on a table,
- mounted on a stand,
- wall mounted using a standard VESA bracket (optional),
- wall-mounted using a dedicated bracket, which can also house the AUD transducers (optional)

When securing the Trumpet to a VESA wall mount, take care to use M4 screws that penetrate the threaded holes to a depth of no more than 6 mm.

CHAPTER 4

Maintenance

When cleaning operations of any kind are required, the instrument must first be disconnected and switched off by unplugging the power cord and the USB cable.

Internal inspection and servicing of the instrument must be entrusted entirely to technicians approved by Inventis S.r.l.

Transducers are manufactured utilizing ultra-fragile diaphragms that could be damaged in the event of impact. Handle with care during maintenance operations.

The Trumpet device do not require any special periodic maintenance other than calibration and normal cleaning, both of which are described in this chapter.

4.1 CALIBRATION AND EQUALIZATION (REM)

The calibration of the reference microphone must be validated by technicians approved by Inventis S.r.l. The operation should be carried out at least once every 12 months, and whenever the transducer is replaced.

Every time there is a change to the geometry of the surroundings in which the device is used, the operator must run the speaker equalization procedure (for further information, refer to "Maestro – Fitting and hearing aid test functionalities – User Manual").

Every time the probe tube is changed, consequently for each new patient, the probe microphone must be recalibrated (for further information, refer to "Maestro – Fitting and hearing aid test functionalities – User Manual").

If an RECD unit is being used, the calibration of the reference microphone must be validated by technicians approved by Inventis S.r.l. The operation should be carried out at least once every 12 months, and whenever the coupler is replaced.

4.2 PERIODIC CHECKS

To maximize the service life of the instrument and all its accessories, it is advisable that the following tests be carried out on a daily basis:

The tests must be conducted with the instrument positioned for normal use. For more information, refer to the Maestro software manuals.

- Before switching on the instrument, check that all the accessories are properly connected and that the cables and/or connectors, as well as all other components, are neither broken nor damaged externally.
- Run the calibration procedure for the probe microphones with a new probe tube to make certain they are functioning correctly.
- Check subjectively that the outputs when using air conduction and bone conduction are the same for both channels and at all frequencies. Conduct this test at 10 or 15 dB HL, a level sufficient to verify that the stimulus signal has been presented. The person who carries out this test should have optimum hearing.
- Check each frequency at 60 dB HL in AC mode and at 40 dB HL in BC mode: there must be no distortion, noise or parasite signals.
- Check for correct operation of the patient response button.
- Check the voltage of the earphone headset and the bone vibrator
- Check communication with the patient.

4.3 CLEANING AND MAINTENANCE OF TRANSDUCERS

Do not use liquids or sprays to clean the Trumpet. When cleaning the device, use a soft cloth moistened with a mild detergent.

The headphone cushions and the bone vibrator are made of biocompatible material, but are not sterile. To avoid the possible spread of infection when

these items are to be used on a new patient, always wipe the surfaces with a hypoallergenic proprietary disinfectant, following the maker's instructions.

The earpieces of insert earphones are made of biocompatible material and must be used once only, then discarded in compliance with current waste disposal regulations.

Use a cloth moistened slightly with non-caustic medical grade disinfectant to clean the parts of the probe headset that come into contact with the patient (O-ring around the ear, back of probes against the face).

Keep the device — and in particular the microphone components — well away from liquids of whatever nature.

Make certain that moisture cannot form inside the unit. Moisture forming internally of the unit can damage the instrument and expose the user or the patient to the risk of electric shock.

The earpieces of insert earphones are not sterile. The use of unsterilized earpieces can cause ear infections.
The probe tubes are disposable, and accordingly, must not be washed and reused but changed for each new patient.

No part of the Trumpet or of the relative accessories is suitable for sterilization in an autoclave, or for other thermal sterilization or disinfection procedures.

4.4 REPLACEABLE PARTS

The transducers and accessories can be disconnected from the appliance. Should a fault develop in any one of these devices, the unit or accessory must be switched off and isolated from the main unit, having first switched off the instrument and disconnected it from the mains power supply.

All accessories mentioned in the manual are designed especially for use with this instrument. Only accessories supplied by Inventis should be connected to the instrument.

4.5 REPAIRS AND TECHNICAL ASSISTANCE

Before contacting the service department, make certain that all the possible solutions in the "Troubleshooting" appendix C have been tried.

There are no requirements for the sterilization or disinfection of parts being returned to the manufacturer for repair and servicing.

Should the instrument need to be sent to the Inventis service department or returned to the dealer, it is important that the original packing should be used, and that all accessories and transducers are enclosed.

Contact the dealer or the Inventis service department before shipping the product for servicing or repairs. In most instances it will be possible to remedy the problem without resorting to shipment.

4.6 ENABLE NEW LICENSES

When a new license key is purchased from Inventis, this can be used to enable new functionalities of the Trumpet system. The “Licenses Activation Tool” software can be requested from the Inventis Service department. On receiving the zip file, extract and run the RE1LicensesActivationTool.exe.

Be sure to have the license key available. Connect the Trumpet to the PC with the USB cable provided and plug the adapter into the mains power socket (for more information, consult the chapter 3 of the *Trumpet User Manual*). Close Maestro and proceed to run the “RE1LicensesActivationTool” software. The following window will appear:

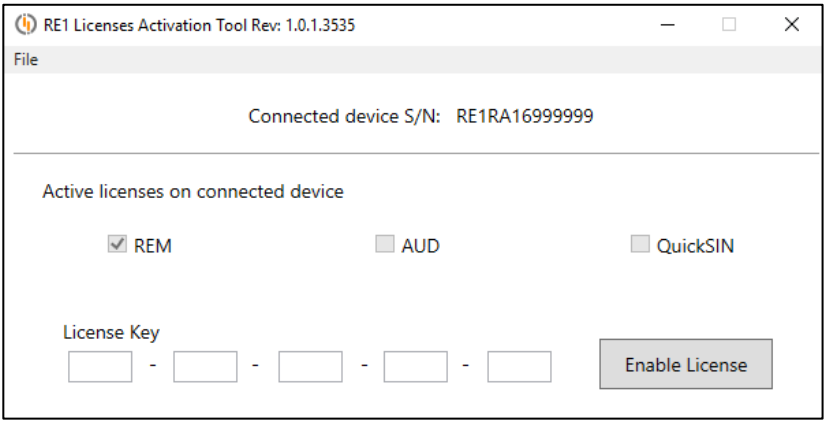

The licenses currently active on the device are shown in the central area of the window.

Enter the license key received from Inventis in the 5 fields (4 characters per field), exactly as written on the license document. Now click the “Enable License” button: if the license has been enabled, a message confirms the success of the operation and the relative check box in the central part of the screen will be ticked. If a message appears warning that the key is not valid, check that it has been entered correctly. Remember that for licenses to be enabled, the device must be connected to the computer by way of the USB cable provided.

If there is no doubt that the key has been entered correctly and the license still cannot be enabled, contact Inventis customer service

4.7 FIRMWARE UPGRADE

The procedure for updating the firmware of the device is described in the manual entitled *Maestro – Fitting and hearing aid test functionalities – User Manual*, and can be implemented using the “Firmware Upgrader” tool stored in the Maestro installation folder under *Service/Trumpet /FirmwareUpgrader*.

4.8 CALIBRATION OF MICROPHONES BY CODE

The procedure for calibrating the reference microphones of REM probes or the RECD coupler microphone by code is described in *Maestro – Fitting and hearing aid test functionalities – User Manual*, and can be carried out using the Maestro software.

APPENDIX A:

Technical Specifications

REM specifications

REM classification

Real Ear Measurement system, class 2a (MDD 93/42)

REM GENERAL SPECIFICATIONS	
Frequency range	125 Hz – 12 kHz
Reference microphones measurement range	40 – 110 dB SPL
Probe microphones measurement range	40 – 130 dB SPL
Stimulus intensity at 1 m	50 dB SPL – 90 dB SPL, steps of 5 dB (+/- 3 dB)
Equalization method	Modified Pressure Method with Concurrent Equalization (Stored Equalization for open fitting)
Analysis	1/3 – 1/24 octave bands (selectable by the user)
Probe tubes	Silicone: nominal diameter 1 mm, nominal length 80 mm

SIGNALS AVAILABLE FOR REM	
Type	
ICRA	●
ISTS	●
The rainbow Passage	●
Speech	●
Assorted ambient sounds	●
Freq. lowering-s	●
Freq. lowering-sh	●

Pink noise (PN)	●
White noise (WN).	●

REM MEASUREMENTS AVAILABLE	
REUR / REUG (single side and bilateral)	●
REOR / REOG (single side and bilateral)	●
REAR / REAG / REIG (single side and bilateral*)	●
RECD	opt
MPO (single side and bilateral*)	●
Advanced (single side and bilateral*)	●
Live (single side and bilateral)	●

*: bilateral available only for ITE measurements

AVAILABLE TARGET CURVE REQUIREMENTS	
NAL-NL1	●
NAL-NL2	●
DSL V5	●

OUTPUTS AND TRANSDUCERS AVAILABLE FOR REM	
In-situ probe microphones (wired or wireless)	●
Insert transducers for RECD	●
Built-in speaker (free field)	●
Coupler base (opt)	●

Audiometer specifications

Audiometer classification

Pure tone audiometer type 2 and speech audiometer class A (IEC 60645-1, ANSI S3.6)

SIGNALS AVAILABLE FOR AUDIOMETRY	
Type	
Tone	●
Warble tone	●
MIC input for speech audiometry (*live speech*)*	●
Narrow band noise (NBN)	●
White noise (WN).	●
Speech noise (SN)	●

*the microphone must be positioned in front of the operator's mouth.

SIGNAL CHARACTERISTICS	
Attenuator step	1, 2 and 5 dB
Presentation mode	Continuous Pulsed at a rate of 0.5 Hz, 1 Hz, 2 Hz, or operator-settable rate

OUTPUTS AND TRANSDUCERS AVAILABLE FOR AUDIOMETRY	
Output	
Air conduction (DD45 or TDH-39 headphones)	●
Air conduction (ER-3C insert earphones)	●
Bone conduction (B-71 vibrator)	●
Free field (built-in speaker, external passive speakers)	●

AUDIOMETRY TESTS AVAILABLE	
Pure tone audiometry	●
Autothreshold	●
Speech audiometry	●
Master Hearing Aid	●
QuickSIN	opt

Stenger	●

PURE TONES AND WARBLE AVAILABLE FREQUENCIES AND MAXIMUM OUTPUTS					
Freq. (Hz)	**AC TDH39 DD45[1] (dB HL)**	**AC ER-3C[1] (dB HL)**	**BC[1] (dB HL)**	**FF Int.[2] (dB HL)**	**FF Ext.[2] (dB HL)**
125	80	90	-	60	65
250	100	105	45	75	80
500	110	110	65	85	90
750	115	115	70	85	90
1.000	120	120	75	85	90
1.500	120	120	80	85	90
2.000	120	120	80	85	90
3.000	120	120	75	85	90
4.000	120	110	75	85	90
6.000	105	100	55	85	90
8.000	95	90	50	75	80

SPEECH AUDIOMETRY MAXIMUM OUTPUTS					
AC TDH-39[1] (dB HL)	**AC DD45[1] (dB HL)**	**AC ER-3C[1] (dB HL)**	**BC[1] (dB HL)**	**FF Int.[2] (dB HL)**	**FF Ext.[2] (dB HL)**
100	100	100	60	70	80

NBN, WN AND SN MASKING AVAILABLE FREQUENCIES AND MAXIMUM OUTPUTS						
Freq. (Hz)	**AC TDH39[1] (dB EM)**	**AC DD45[1] (dB EM)**	**AC ER-3C[1] (dB EM)**	**BC[1] (dB FL)**	**FF Int.[2] (dB HL)**	**FF Ext.[2] (dB HL)**
125	60	60	70	-	55	60
250	80	80	85	105	60	65
500	95	95	95	110	75	80
750	100	100	100	110	80	85
1.000	105	105	105	110	80	85
1.500	105	105	105	110	80	85
2.000	105	105	105	110	80	85
3.000	105	105	105	100	80	85
4.000	105	105	100	100	80	85
6.000	100	100	90	90	75	80
8.000	90	90	80	80	65	70
WN	90 dB EM	90 dB EM	80 dB EM	45 dB EM	70 dB HL	75 dB HL
SN	90 dB EM	90 dB EM	80 dB EM	45 dB EM	70 dB HL	75 dB HL

(1) If the instrument is powered up only by way of the USB cable, the maximum limits will be reduced by 10 dB
(2) With USB power supply only, the FF outputs are disabled

COMPATIBLE TRANSDUCERS			
Type	*Manufacturer*	*Model*	*Impedance*
Supra-aural headphones	Telephonics Corp.	TDH39	10 ohm (1 kHz)
Supra-aural headphones	Radioear Corp.	DD45	10 ohm (1 kHz)
Insert earphones	Etymotic Research Inc.	ER-3C	10 ohm (1 kHz)
Bone vibrator	Radioear Corp.	B71	10 ohm (1 kHz)

AMBIENT NOISE ATTENUATION VALUES FOR TRANSDUCER		
Freq *[Hz]*	*TDH 39 / DD45 with MX41\AR or PN 51 cushions* *[dB]*	*ER-3C* *[dB]*
125	3	33.5
250	5	34.5
500	7	34.5
750	-	-
1000	15	35
1500	-	-
2000	26	33
3000	-	-
4000	32	39.5
6000	-	-
8000	24	43.5

REFERENCE EQUIVALENT THRESHOLD LEVELS					
Freq	**TDH 39**	**DD45**	**ER 3C**	**B71***	**FF**
	ISO 389-1 (ANSI S3.6)	**ISO 389-1**	**ISO 389-2 (ANSI S3.6)**	**ISO 389-3 (ANSI S3.6)**	**ISO 389-7 (ANSI S3.6)**
[Hz]	**[dB] re 20 µPa]**	**[dB] re 20 µPa]**	**[dB] re 20 µPa]**	**[dB] re 1 µPa]**	**[dB] re 20 µPa]**
125	45	47.5	26	-	22.1
250	25.5	27	14	67	11.4
500	11.5	13	5.5	58	4.4
750	7.5 (8)	6.5	2	48.5	2.4
1000	7	6	0	42.5	2.4
1500	6.5	8	2	36.5	2.4
2000	9	8	3	31	-1.3
3000	10	8	3.5	30	-5.8
4000	9.5	9	5.5	35.5	-5.4
6000	15.5	20.5	2	40	4.3
8000	13	12	0	40	12.6

(*) The calibration of the bone vibrator (B71) refers to positioning on the mastoid bone.

Reference standards: ISO 389-1, ISO 389-2, ISO 389-3, ISO 389-5, ISO 389-7, ISO 389-8 and ANSI S3.6
.

SPEECH AUDIOMETRY REFERENCE EQUIVALENT THRESHOLD VALUES IEC 60645-1				
TDH39	**DD45**	**ER 3C**	**B71**	**Free field**
Coupler: ANSI S3.7 (NBS-9A) / IEC 60318-3 (6cc)		IEC 60318-5	IEC 60318-6	Referred to 0 degrees incidence
dB [re 20 µPa]	**dB [re 20 µPa]**	**dB [re 20 µPa]**	**dB [re 1 µN]**	**dB [re 20 µPa]**
20.0	20.0	20.0	55.0	20.0
Applied to USB, MIC, SPEECH NOISE and WHITE NOISE signals				

SPEECH AUDIOMETRY REFERENCE EQUIVALENT THRESHOLD VALUES ANSI S3.6				
TDH39	**DD45**	**ER 3C**	**B71**	**Free field**
Coupler: ANSI S3.7 (NBS-9A) / IEC 60318-3 (6cc)		IEC 60318-5	IEC 60318-6	Referred to 0 degrees incidence
dB [re 20 µPa]	**dB [re 20 µPa]**	**dB [re 20 µPa]**	**dB [re 1 µN]**	**dB [re 20 µPa]**
19.5	18.5	12.5	55.0	14.5
Applied to USB, MIC, SPEECH NOISE and WHITE NOISE signals				

STATIC CALIBRATION FORCE	
Transducer	*Force*
Supra-aural headphones	4.5 N ± 0.5 N
Bone vibrator	5.4 N ± 0.5 N

PATIENT - OPERATOR COMMUNICATION	
Talk-over by way of microphone connected to PC or to device	●
Talk-back by way of headphones connected to PC or to device	●
Patient response button	●

Other specifications

CONTROL OF DEVICE	
By way of Inventis Maestro software installed on PC.	●

POWER SUPPLY	
Consumption	30 Watts
Power supply	15V, 2A d.c. utilizing external adapter rated 100-240 Vac 50/60 Hz (included in the pack), responding to EN 60601-1 standard

RADIO MODULES	
Maximum emitted power	- 10 mW (Bluetooth module) - 37.7 dBµA/m @10 m (Wireless power transmission module)
Operating frequency band	- 2402-2480 MHz (Bluetooth module) - 140 kHz (Wireless power transmission module)

DURATION OF CALIBRATION	
Reference microphone	6-12 months
Transducers	12 months

WIRELESS REM PROBES	
Battery	Type designation: Varta CP 1654 A3, rechargeable Li-Ion cells, 3.7V, 120mAh Type number: 63165 Autonomy: minimum 3h of continuous use Recharge time: max 2h
Operation	Temperature: between +15°C and +35°C Relative humidity: between 30% and 90% (no condensation) Pressure: between 700 hPa and 1060 hPa
Transport and storage	Temperature between 0°C and +45°C Relative humidity: 90% max, no condensation Pressure: between 500 hPa and 1060 hPa

AMBIENT CONDITIONS	
Operation	Temperature between +15°C and +35°C Relative humidity: between 30% and 90% (no condensation) Pressure: between 700 hPa and 1060 hPa
Transport and storage	Temperature between -10°C and +50°C Relative humidity: 90% max, no condensation Pressure: between 500 hPa and 1060 hPa
Warm-up time	1 minute

MECHANICAL	
Dimensions (LxDxH)	15.5 x 10 x 24.5 cm / 6.1 x 3.9 x 9,7 in
Weight of instrument only	1.5 Kg / 3.5 lbs

BACK PANEL CONNECTORS		
Description	*Type*	*Connector*
Power supply	Input	DC socket 2.1/5.5 mm
AC transducers, L and R	Output	2 x mono audio jack, 1/4”
RECD insert transducers / L and R	Output	2 x mono audio jack, 1/4”
Bone vibrator	Output	Mono audio jack, 1/4”
Free field L and R (AUD)	Output	2 x Euro type spring clamp pluggable connector
SPK free field (SPARE, FOR FUTURE USES)	Output	Euro type spring clamp pluggable connector
Monitor earphones	Output	Stereo audio jack, 3.5 mm
Patient headphones	Output	Stereo audio jack, 3.5 mm
RECD external speaker	Input - Output	6 pin mini DIN
Patient response button	Input	Mono audio jack, 1/4”
External operator microphone (talk-forward)	Input	Mono audio jack, 3.5 mm
Patient microphone (talk-back)	Input	Mono audio jack, 3.5 mm
USB	Input - Output	USB type B
FRONT PANEL CONNECTORS		
REM probe	Input	8 pin DIN connector

HEARING SAFETY FEATURES	
Audiometer	Alert situations: audible signal levels higher than 100 dB HL (IEC 60645-1) Safety measures: 1) Activation of “higher dB” button required to raise intensity beyond 100 dB HL 2) Warning on test screen 3) Activation of channel "Norm. ON" function inhibited
REM	Alert situations: audible signal levels above UCL thresholds, or above a customized value between 110 and 130 dB SPL, registering in the auditory canal Safety measures: 1) Warning of level higher than UCL threshold and interruption of measurement (if threshold set at UCL) 2) Warning of level above customized threshold (between 110 and 130 dB SPL) in the auditory canal and interruption of measurement (if threshold set at customized value) 3) Warning if control is deactivated

SPECIFICATIONS OF INPUT TRANSDUCERS		
Input	*Type of connector*	*Electrical specifications*
Power supply	DC plug 2.5mm	Centre pin +15V, outer collar negative
Patient response button	Mono jack, 6.3mm	Switches 3V at logic input (switching current: 10mA) Impedance: 10KΩ
RECD speaker	6 pin DIN connector	-
Talk over	Mono jack, 3.5mm	Dynamic microphone, Electret or 200 Ω Impedance: 47KΩ Frequency response: 100-12KHz +/- 3dB Electret bias: 2.2V with 2.2KΩ
Talk back	Mono jack, 3.5mm	
REM probe	8 pin DIN connector	4 x omnidirectional microphone, Back Electret Condenser Impedance 2.2KΩ Frequency range: 20 – 16000 Hz Standard working voltage: 2 V Maximum working voltage: 10V Current draw: 0.5 mA max

SPECIFICATIONS OF OUTPUT TRANSDUCERS		
Output	*Voltage available*	*Nominal impedance*
TDH 39	16Vpp	10 Ω
DD45	16Vpp	10 Ω
ER 3C / RECD	16Vpp	10 Ω
B 71	16Vpp	10 Ω
Free field (SPKF),	16Vpp	4-8 Ω
Monitor	1Vrms with 32 Ω load	

SPECIFICATIONS OF SIGNALS AVAILABLE	
WN	Pure random noise, filtered Low cut-off frequency: 50 Hz High cut-off frequency: 20 kHz
SN	As specified in IEC 60645-1
PN	Pure random noise, filtered Low cut-off frequency: 50 Hz High cut-off frequency: 20 kHz
Warble tone	Frequency of modulation signal: 10 Hz Modulation waveform: triangular Modulation coefficient: ±10%
NBN	Band: ½ octave
ISTS	International Speech Test Signal. See Holube, I., Fredelake, S., Vlaming, M. & Kollmeier, B. (2010). Development and analysis of an international speech test signal (ISTS). International Journal of Audiology, 49, 891-903 for further details.
ICRA	International Collegium of Rehabilitative Audiology. See website “icra-audiology.org” for further details.

APPLICABLE STANDARDS	
REM measurements	IEC 61669 / ANSI S3.46
Audiometry	IEC 60645-1 / ANSI S3.6, Type 2 (pure tone), Class A (speech)
Autothreshold	Amended by ISO 8253-1
Calibration	AC: ISO 389-1 (TDH 39, DD 45), ISO 389-2 (ER 3C) BC: ISO 389-3 FF: ISO 389-7
Electrical safety	EN 60601-1 Class I Type B
EMC	EN 60601-1-2

CE CERTIFICATE	
93/42 classification (DDM)	Class IIa
Classification rules (Annex IX of 93/42)	10
Notified body	TÜV SÜD Product Service GmbH Ridlerstrasse 65 D-80339 Műnchen
Notified body number	0123

Inventis will make available on request circuit diagrams, component part lists, descriptions, calibration instructions or other information that will help service personnel to repair those parts of the device that are designed by Inventis as repairable by service personnel.

APPENDIX B:

Specifications of speaker for free field tests

To produce the intensity levels in free field conditions specified in Appendix A, the speaker utilized must meet the specifications indicated below.

Speaker specifications:

Minimum input power	25 W
Nominal impedance	4-8 Ω
Sensitivity (at 1 m for 1 W, 1 kHz)	> 93 dB SPL
Pass band	105 Hz – 20 kHz

APPENDIX C:

Troubleshooting

Problem	Possible cause	Solution
No signal from a transducer	Transducer not connected to correct output	Connect the transducer to the correct output
	Transducer damaged	Contact Inventis service department or dealer
No signal from patient response button when pressed	Wrong connection	Connect the patient response button to the correct socket
	Patient response button damaged	Contact Inventis service department or dealer
No signal from monitor earphones	Wrong connection	Check that the monitor headphones are plugged into the correct socket, according to the selected type of connection (instrument or PC)
	Headphone volume too low	Increase the audio volume by way of the Maestro control
Patient's voice cannot be heard	Problems with TALKBACK input connection	Check the connection to the TALKBACK input

	TALKBACK volume too low	Adjust the TALK BACK volume by way of the Maestro control
Connection between PC and device cannot be established	USB port of the computer not working	Connect the instrument to a different USB port
	USB cable damaged	Replace the USB cable (standard USB cable, type A/B)
Results of test not credible	REM: Reference microphones not calibrated	Request calibration of reference microphones
	REM: Equalization not valid	Run speaker equalization procedure
	REM: Probe microphones not calibrated	Calibrate probe microphones
	REM: Auditory canal obstructed by wax	Conduct an ear inspection and proceed to remove wax
	AUD: Transducers not calibrated	Run transducer calibration procedure
	AUD: Incorrect type of AC transducer selected (headphone or earphone)	Change the selected type of AC transducer in use by way of the Maestro control
Speaker equalization procedure not successful	Probes not suitably positioned	Check that the probes are placed correctly on the patient, and that the patient is positioned facing the instrument, at a distance of around one metre
	Background noise level too high	Move the instrument to a quieter room or take steps to reduce background noise as much as possible

	REM reference microphone not functioning properly	If the problem persists after several attempts, contact customer service
Probe tube calibration procedure not successful	Probe tube blocked or worn	Change the probe tube
	Probe tube not inserted to the correct position for calibration purposes	See heading 2.2.2 *Probe tube calibration*
	REM probes too far from speaker	Bring the REM probes nearer, to around 0.5 m
	REM probes or reference microphone not functioning properly	If the problem persists after several attempts, contact customer service
A test cannot be accessed	Optional test not activated	Contact the Inventis technical service department to obtain the license, supplying the serial number of the instrument
FF (free field) output cannot be selected	Power adapter not connected	Connect the power adapter supplied with the instrument
No sound from the required speaker in FF mode	FF output not correctly configured	Check that the correct configuration was selected during the calibration procedure
Sound produced by speaker is distorted	Patient not positioned facing the device	Position the patient directly in front of the device, at a distance of around one metre

	Speaker faulty	Contact customer service

When using the instrument in conjunction with a soundproof booth, check that the connections both inside the booth and between the booth and the instrument are correct and secure.

APPENDIX D:

Electromagnetic emissions

The instrument has been tested and been found to comply with the limits for electromedical devices imposed by EN 60601-1-2 standard. These limits guarantee a reasonable level of protection against harmful interference in a typical medical installation.

The instrument generates, utilizes and radiates energy at radio frequency, and if not correctly installed and used as indicated in the instructions, can cause harmful interference to other devices located in the immediate vicinity. At all events, there can be no guarantee that interference will not occur in certain situations.

The Trumpet must not be used in close proximity to other equipment or stacked together with other equipment. If this cannot be avoided, check the operation of the instrument carefully to ensure that it is able to deliver normal levels of performance in the configuration adopted.

Should the instrument appear to interfere with other devices — this can be verified by switching off the instrument and then switching on again — it may be possible to remedy the problem by adopting one or more of the following solutions:

- change the orientation and/or the position of the device affected by interference;
- distance the devices one from another;
- consult the manufacturer or a service centre for assistance.

Cables, transducers and accessories

Inventis declares compliance with EN 60601-1-2 standard using the following cables, transducers and accessories:

1) Power cord (maximum length: 1.8 m)
2) Medical grade power adapter, model n° MPU31-106-P01K002-B1F4-15V (L5)
3) REM probe (made by Inventis for the Trumpet)
4) TDH39 or DD-45 supra-aural headphones, 2 m shielded cable, dual signal (same as supplied with the device)

5) B-71 bone vibrator, 2 m braided cable, not shielded, dual signal (same as supplied with the device)
6) Patient headphones, manufacturer: Sennheiser, model: HD201
7) Monitor headphones with microphone, manufacturer: Sennheiser, model: PC3 (same as supplied with the device)
8) Clip-on talk-back microphone, 1 m shielded cable (same as supplied with the device)
9) Patient response button (made by Inventis), 2 m shielded cable
10) Insert earphones, manufacturer: Etymotic, model: ER-3C (same as supplied with the device)
11) Speaker cable, not shielded, maximum length: 5 m
12) Shielded USB cable, maximum length: 2 m

The use of accessories, transducers and cables other than those specified, with the exception of transducers and cables sold by Inventis as replacement parts for internal components, can have the effect of increasing emissions from the device and reducing its immunity.

Anyone connecting other items of equipment must ensure that the overall system complies with EN 60601-1-2 standard.

Manufacturer's indications and declaration - electromagnetic emissions		
The Trumpet is designed for use in an electromagnetic environment as specified below. The user of the Trumpet must ensure that the instrument is operated in ambient conditions as specified.		
Emission tests	**Conformity**	**Electromagnetic environment - guidelines**
RF emissions CISPR11	Group 1	The Trumpet utilizes RF energy solely for internal functions of the instrument. Consequently, the RF emissions generated are minimal and unlikely to interfere with other equipment operating nearby.
RF emissions CISPR11	Class B	The Trumpet is suitable for use in any structure, including dwellings, and in environments connected directly to the public low voltage grid supplying electrical power to residential buildings.
Harmonic emissions IEC 61000-3-2	Class A	
Fluctuations in voltage/emissions (flicker) IEC 61000-3-3	Compliant	

Manufacturer's indications and declaration - electromagnetic immunity			
The Trumpet is designed for use in an electromagnetic environment as specified below. The user of the Trumpet must ensure that the instrument is operated in ambient conditions as specified.			
Immunity tests	**Test level to EN 60601**	**Level of Compliance**	**Electromagnetic environment - guidelines**
Electrostatic discharges (ESD) IEC 61000-4-2	± 6kV contact ± 8 kV air	± 6kV contact ± 8 kV air	The floor must be wood, concrete or ceramic tile. If floors are covered with materials that present synthetic coatings, relative humidity must be at least 30%.
Electrical fast transients / bursts IEC 61000-4-4	± 2 kV for electrical power supply lines ± 1 kV for input/output lines	± 2 kV for electrical power supply lines ± 1 kV for input/output lines	The quality of the electricity supply from the grid must be the same as for typical commercial or hospital premises.
Overcurrent IEC 61000-4-5	± 1 kV from line(s) to line(s) ± 2 kV from line(s) to earth	± 1 kV from line(s) to line(s) ± 2 kV from line(s) to earth	The quality of the electricity supply from the grid must be the same as for typical commercial or hospital premises.
Voltage dips, short interruptions and fluctuations affecting voltage on incoming electrical power supply lines IEC 61000-4-11	< 5% U_T (dip >95% in U_T) for half cycle. 40% U_T (dip >60% in U_T) for 5 cycles. 70% U_T (dip >30% in U_T) for 25 cycles. <5% U_T (dip >95% in U_T) for 5 s.	< 5% U_T (dip >95% in U_T) for half cycle. 40% U_T (dip >60% in U_T) for 5 cycles. 70% U_T (dip >30% in U_T) for 25 cycles. <5% U_T (dip >95% in U_T) for 5 s.	The quality of the electricity supply from the grid must be the same as for typical commercial or hospital premises. If the user of the Trumpet needs to rely on uninterrupted operation of the unit even in the absence of mains power, the instrument must be connected either to a UPS or to a battery.
Magnetic field at power frequency (50/60 Hz) IEC 61000-4-8	3 A/m	3 A/m	Power frequency magnetic fields must correspond to the levels characteristic of sites located typically in standard commercial or hospital premises.
Note: U_T is the a.c. supply voltage prior to application of the test level.			

Manufacturer's indications and declaration - electromagnetic immunity
The Trumpet is designed for use in an electromagnetic environment as specified below. The user of the Trumpet must ensure that the instrument is operated in

ambient conditions as specified.			
Immunity tests	**Test level to EN 60601**	**Level of Compliance**	**Electromagnetic environment - guidelines**
Conducted RF IEC 61000-4-6 Radiated RF IEC 61000-4-3	3 Vrms From150 kHz to 80 Mhz 3 V/m From 80 Mhz to 2.5 Ghz	3 Vrms 3 V/m	In the event that there are portable and mobile RF communication appliances operating in the vicinity of the Trumpet, and the relative cables, be sure to maintain at least the recommended separation distance, calculated on the basis of the equation pertinent to the transmitter frequency. **Recommended separation distance** $d = 1.2\sqrt{P}$ $d = 1.2\sqrt{P}$ from 80 MHz to 800MHz $d = 2.3\sqrt{P}$ from 800 MHz to 2.5 GHz where *P* is the nominal maximum power output from the transmitter, expressed in watts (W) and indicated by the maker of the transmitter, and *d* is the recommended separation distance, expressed in metres (m). The field strengths of fixed RF transmitters, established by way of an electromagnetic survey on site, *a)* must be lower than the level of compliance within each range of frequencies, *b)* may be associated with instances of interference near appliances bearing the symbol indicated below
Note 1: At 80 MHz and at 800 MHz, the higher frequency range is applied. *Note 2:* These indications may not be valid in all situations. Electromagnetic propagation is affected by absorption and reflection on encountering structures, objects and persons.			
a) It is not possible to make a theoretical prediction with absolute certainty as to the field strengths of fixed transmitters, such as base radio stations (cell/cordless), terrestrial mobile telephones and radio, ham radio, AM and FM radio or TV transmissions. To evaluate the electromagnetic environment created by fixed RF transmitters, it may be necessary to conduct an electromagnetic survey on site. If the field strength measured at the point where the Trumpet is in use exceeds the applicable RF level of compliance indicated above, check the operation of the instrument closely, to ensure that its performance levels meet the required standards. If abnormalities are observed, then additional measures may be necessary, such as changing the			

directional position or the location of the Trumpet.

b) In the frequency range from 150 kHz to 80 MHz, field strengths must be lower than 3 V/m.

Recommended separation distances between portable and mobile RF communication appliances and the device			
The Trumpet is designed for use in electromagnetic environments where radiated RF interference phenomena are kept under control. The user of the Trumpet can help to prevent electromagnetic interference by ensuring that a minimum recommended distance is maintained between portable and mobile RF communication appliances (transmitters) and the Trumpet device, as indicated in the table below, according to the maximum power output from the appliances in question.			
Nominal maximum power output from transmitter (W)	**Separation distance based on transmitter frequency (m)**		
	from 150 kHz to 80 MHz $d = 1.2\sqrt{P}$	from 80 MHz to 800 MHz $d = 1.2\sqrt{P}$	from 800 MHz to 2.5 GHz $d = 2.3\sqrt{P}$
0.01	0.12	0.12	0.23
0.1	0.38	0.38	0.73
1	1.2	1.2	2.3
10	3.8	3.8	7.3
100	12	12	23
For transmitters with a nominal maximum power output not included in the table above, the recommended separation distance *d* in metres (m) can be estimated from an equation applicable to the transmitter frequency, where *P* is the nominal maximum power output from the transmitter in watts (W) specified by the manufacturer. *Note 1:* At 80 MHz and at 800 MHz, the separation distance for the higher frequency range is applied. *Note 2:* These indications may not be valid in all situations. Electromagnetic propagation is affected by absorption and reflection on encountering structures, objects and persons.			

RF RADIATION EXPOSURE STATEMENT

This product complies with FCC and ISED radiation exposure limits set forth for an uncontrolled environment. The antenna should be installed and operated with minimum distance of 20 cm between the radiator and your body.

Cet appareil est conforme aux limites d'exposition aux rayonnements de l’ISED pour un environnement non contrôlé. L'antenne doit être installé de façon à garder une distance minimale de 20 centimètres entre la source de rayonnements et votre corps.