TEST REPORT

Product	:	WMS2 Wireless Microsensor
Trade mark	:	N/A
Model/Type reference	:	WMS2(VLSW2)
Serial Number	:	N/A
Report Number	:	EED32N80400301
FCC ID	:	2AVOR-WMS2
Date of Issue	:	Nov. 19, 2021
Test Standards	:	47 CFR Part 15 Subpart C
Test result	:	PASS

Prepared for:

Retail Aware, Inc
808 Conagra Dr ; Ste 401 ; Omaha, Ne 68102

Prepared by:

Centre Testing International Group Co., Ltd.
Hongwei Industrial Zone, Bao'an 70 District,
Shenzhen, Guangdong, China
TEL: +86-755-3368 3668
FAX: +86-755-3368 3385

Compiled by: Frazer. Li — Frazer Li

Reviewed by: Aaron Ma — Aaron Ma

Approved by: David Wang — David Wang

Date: Nov. 19, 2021

Check No.: 8807260521

CENTRE TESTING INTERNATIONAL GROUP CO.,LTD. CTI Report Seal

2 Content

1 COVER PAGE 1
2 CONTENT 2
3 VERSION 3
4 TEST SUMMARY 4
5 GENERAL INFORMATION 5
5.1 CLIENT INFORMATION 5
5.2 GENERAL DESCRIPTION OF EUT 5
5.3 TEST CONFIGURATION 6
5.4 TEST ENVIRONMENT 6
5.5 DESCRIPTION OF SUPPORT UNITS 7
5.6 TEST LOCATION 7
5.7 MEASUREMENT UNCERTAINTY (95% CONFIDENCE LEVELS, K=2) 7
6 EQUIPMENT LIST 8
7 TEST RESULTS AND MEASUREMENT DATA 10
7.1 ANTENNA REQUIREMENT 10
7.2 MAXIMUM CONDUCTED OUTPUT POWER 11
7.3 DTS BANDWIDTH 13
7.4 MAXIMUM POWER SPECTRAL DENSITY 15
7.5 BAND EDGE MEASUREMENTS AND CONDUCTED SPURIOUS EMISSION 17
7.6 RADIATED SPURIOUS EMISSION & RESTRICTED BANDS 20
PHOTOGRAPHS OF TEST SETUP 26
PHOTOGRAPHS OF EUT CONSTRUCTIONAL DETAILS 28

3 Version

Version No.	Date	Description
00	Nov. 19, 2021	Original

4 Test Summary

Test Item	Test Requirement	Result
Antenna Requirement	47 CFR Part 15 Subpart C Section 15.203/15.247 (c)	PASS
AC Power Line Conducted Emission	47 CFR Part 15 Subpart C Section 15.207	N/A
DTS Bandwidth	47 CFR Part 15 Subpart C Section 15.247 (a)(2)	PASS
Maximum Conducted Output Power	47 CFR Part 15 Subpart C Section 15.247 (b)(3)	PASS
Maximum Power Spectral Density	47 CFR Part 15 Subpart C Section 15.247 (e)	PASS
Band Edge Measurements	47 CFR Part 15 Subpart C Section 15.247(d)	PASS
Conducted Spurious Emissions	47 CFR Part 15 Subpart C Section 15.247(d)	PASS
Radiated Spurious Emission & Restricted bands	47 CFR Part 15 Subpart C Section 15.205/15.209	PASS

Remark:

1.Company Name and Address shown on Report, the sample(s) and sample Information were provided by the applicant who should be responsible for the authenticity which CTI hasn't verified.

2.N/A:Only DC power supply is supported and this item is not considered.

5 General Information

5.1 Client Information

Applicant:	Retail Aware, Inc
Address of Applicant:	808 Conagra Dr ; Ste 401 ; Omaha, Ne 68102
Manufacturer:	Retail Aware, Inc
Address of Manufacturer:	808 Conagra Dr ; Ste 401 ; Omaha, Ne 68102
Factory:	Retail Aware, Inc
Factory of Manufacturer:	808 Conagra Dr ; Ste 401 ; Omaha, Ne 68102

5.2 General Description of EUT

Product Name:	WMS2 Wireless Microsensor
Mode No.(EUT):	WMS2(VLSW2)
Trade mark:	N/A
Product Type:	☐ Mobile ☐ Portable ☒ Fix Location
Operation Frequency:	902 MHz~928MHz
Device Type:	DTS
Number of Channel:	1
Antenna Type:	Internal antenna
Antenna Gain:	-3dBi
Power Supply:	DC 3V Lithium battery
Test Voltage:	DC 3V
Sample Received Date:	Oct. 14, 2021
Sample tested Date:	Oct. 14, 2021 to Oct. 17, 2021

Operation Frequency each of channel

Channel	Frequency
Only Channel	915MHz

5.3 Test Configuration

EUT Test Software Settings:	
Software:	RF test
EUT Power Grade:	Power level is built-in set parameters and cannot be changed and selected
This EUT was set to transmit in a worse-case scenario with modulation on. For duty cycle, the highest possible duty cycle was used. For other transmitter testes, the transmitter was set to transmit continuously.	

5.4 Test Environment

Operating Environment:	
Radiated Spurious Emissions:	
Temperature:	22~25.0 °C
Humidity:	50~55 % RH
Atmospheric Pressure:	1010mbar
Conducted Emissions:	
Temperature:	22~25.0 °C
Humidity:	50~55 % RH
Atmospheric Pressure:	1010mbar
RF Conducted:	
Temperature:	22~25.0 °C
Humidity:	50~55 % RH
Atmospheric Pressure:	1010mbar

5.5 Description of Support Units

The EUT has been tested with associated equipment below.

Associated equipment name		Manufacturer	model	S/N serial number	Supplied by	Certification
AE	/	/	/	/	/	/

5.6 Test Location

All tests were performed at:

Centre Testing International Group Co., Ltd
Building C, Hongwei Industrial Park Block 70, Bao'an District, Shenzhen, China
Telephone: +86 (0) 755 33683668 Fax:+86 (0) 755 33683385
No tests were sub-contracted.
FCC Designation No.: CN1164

5.7 Measurement Uncertainty (95% confidence levels, k=2)

No.	Item	Measurement Uncertainty
1	Radio Frequency	7.9×10^{-8}
2	RF power, conducted	0.46dB (30MHz-1GHz)
		0.55dB (1GHz-18GHz)
3	Radiated Spurious emission test	3.3dB (9kHz-30MHz)
		4.3dB (30MHz-1GHz)
		4.5dB (1GHz-18GHz)
		3.4dB (18GHz-40GHz)
4	Conduction emission	3.5dB (9kHz to 150kHz)
		3.1dB (150kHz to 30MHz)
5	Temperature test	0.64°C
6	Humidity test	3.8%
7	DC power voltages	0.026%

6 Equipment List

RF test system					
Equipment	**Manufacturer**	**Mode No.**	**Serial Number**	**Cal. Date (mm-dd-yyyy)**	**Cal. Due date (mm-dd-yyyy)**
Spectrum Analyzer	Keysight	N9010A	MY54510339	12-28-2020	12-27-2021
Signal Generator	Keysight	N5182B	MY53051549	12-28-2020	12-27-2021
Temperature/ Humidity Indicator	biaozhi	HM10	1804186	06-23-2021	06-22-2022
High-pass filter	Sinoscite	FL3CX03WG18 NM12-0398-002	---	---	---
High-pass filter	MICRO-TRONICS	SPA-F-63029-4	---	---	---
DC Power	Keysight	E3642A	MY56376072	12-28-2020	12-27-2021
PC-1	Lenovo	R4960d	---	---	---
Power unit	R&S	OSP120	101374	12-28-2020	12-27-2021
RF control unit	JS Tonscend	JS0806-2	158060006	12-28-2020	12-27-2021
BT&WI-FI Automatic test software	JS Tonscend	JS1120-3	---	---	---

3M Semi/full-anechoic Chamber					
Equipment	**Manufacturer**	**Model No.**	**Serial Number**	**Cal. date (mm-dd-yyyy)**	**Cal. Due date (mm-dd-yyyy)**
3M Chamber & Accessory Equipment	TDK	SAC-3	---	05-24-2019	05-23-2022
TRILOG Broadband Antenna	Schwarzbeck	VULB9163	9163-618	05-16-2021	05-15-2022
Loop Antenna	Schwarzbeck	FMZB 1519B	1519B-076	04-15-2021	04-14-2024
Receiver	R&S	ESCI7	100938-003	10-16-2020 10-16-2021	10-15-2021 10-15-2022
Multi device Controller	maturo	NCD/070/10711 112	---	---	---
Temperature/ Humidity Indicator	Shanghai qixiang	HM10	1804298	06-24-2021	06-23-2022
Cable line	Fulai(7M)	SF106	5219/6A	---	---
Cable line	Fulai(6M)	SF106	5220/6A	---	---
Cable line	Fulai(3M)	SF106	5216/6A	---	---
Cable line	Fulai(3M)	SF106	5217/6A	---	---

3M full-anechoic Chamber					
Equipment	**Manufacturer**	**Model No.**	**Serial Number**	**Cal. date (mm-dd-yyyy)**	**Cal. Due date (mm-dd-yyyy)**
RSE Automatic test software	JS Tonscend	JS36-RSE	10166	---	---
Receiver	Keysight	N9038A	MY57290136	03-04-2021	03-03-2022
Spectrum Analyzer	Keysight	N9020B	MY57111112	03-04-2021	03-03-2022
Spectrum Analyzer	Keysight	N9030B	MY57140871	03-04-2021	03-03-2022
TRILOG Broadband Antenna	Schwarzbeck	VULB 9163	9163-1148	04-28-2021	04-27-2024
Horn Antenna	Schwarzbeck	BBHA 9170	9170-832	04-15-2021	04-14-2024
Horn Antenna	ETS-LINDGREN	3117	00057407	07-04-2021	07-03-2024
Preamplifier	EMCI	EMC184055SE	980596	05-20-2021	05-19-2022
Preamplifier	EMCI	EMC001330	980563	04-15-2021	04-14-2022
Preamplifier	JS Tonscend	980380	EMC051845 SE	12-31-2020	12-30-2021
Temperature/ Humidity Indicator	biaozhi	GM1360	EE1186631	04-16-2021	04-15-2022
Fully Anechoic Chamber	TDK	FAC-3	---	01-09-2021	01-08-2024
Filter bank	JS Tonscend	JS0806-F	188060094	04-09-2021	04-08-2022
Cable line	Times	SFT205-NMSM-2.50M	394812-0001	---	---
Cable line	Times	SFT205-NMSM-2.50M	394812-0002	---	---
Cable line	Times	SFT205-NMSM-2.50M	394812-0003	---	---
Cable line	Times	SFT205-NMSM-2.50M	393495-0001	---	---
Cable line	Times	EMC104-NMNM-1000	SN160710	---	---
Cable line	Times	SFT205-NMSM-3.00M	394813-0001	---	---
Cable line	Times	SFT205-NMNM-1.50M	381964-0001	---	---
Cable line	Times	SFT205-NMSM-7.00M	394815-0001	---	---
Cable line	Times	HF160-KMKM-3.00M	393493-0001	---	---

7 Test results and Measurement Data

7.1 Antenna Requirement

Standard requirement:	47 CFR Part 15C Section 15.203 /247(c)
15.203 requirement: An intentional radiator shall be designed to ensure that no antenna other than that furnished by the responsible party shall be used with the device. The use of a permanently attached antenna or of an antenna that uses a unique coupling to the intentional radiator, the manufacturer may design the unit so that a broken antenna can be replaced by the user, but the use of a standard antenna jack or electrical connector is prohibited. 15.247(b) (4) requirement: The conducted output power limit specified in paragraph (b) of this section is based on the use of antennas with directional gains that do not exceed 6 dBi. Except as shown in paragraph (c) of this section, if transmitting antennas of directional gain greater than 6 dBi are used, the conducted output power from the intentional radiator shall be reduced below the stated values in paragraphs (b)(1), (b)(2), and (b)(3) of this section, as appropriate, by the amount in dB that the directional gain of the antenna exceeds 6 dBi.	
EUT Antenna:	Please see Internal photos
The antenna is Internal antenna. The best case gain of the antenna is -3dBi.	

7.2 Maximum Conducted Output Power

Test Requirement:	47 CFR Part 15C Section 15.247 (b)(3)
Test Method:	ANSI C63.10 2013
Test Setup:	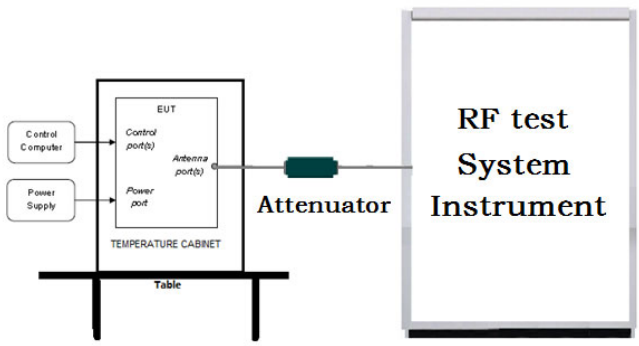 Remark: Offset=Cable loss+ attenuation factor.
Test Procedure:	a) Set the RBW ⩾ DTS bandwidth. b) Set VBW ⩾ 3 × RBW. c) Set span ⩾ 3 x RBW d) Sweep time = auto couple. e) Detector = peak. f) Trace mode = max hold. g) Allow trace to fully stabilize. h) Use peak marker function to determine the peak amplitude level.
Limit:	30dBm
Test Mode:	Transmitting
Test Results:	Pass

Test Frequency (MHz)	Peak Output Power (dBm)	Limit (dBm)	Result
915	12.20	30.00	Pass

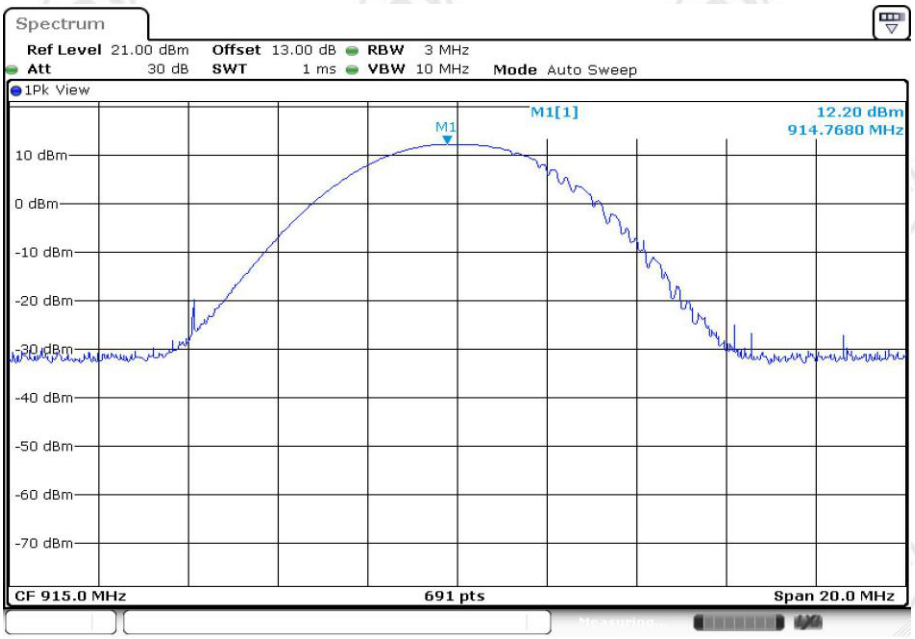

Date: 17.OCT.2021 10:03:37

7.3 DTS Bandwidth

Test Requirement:	47 CFR Part 15C Section 15.247 (a)(2)
Test Method:	ANSI C63.10 2013
Test Setup:	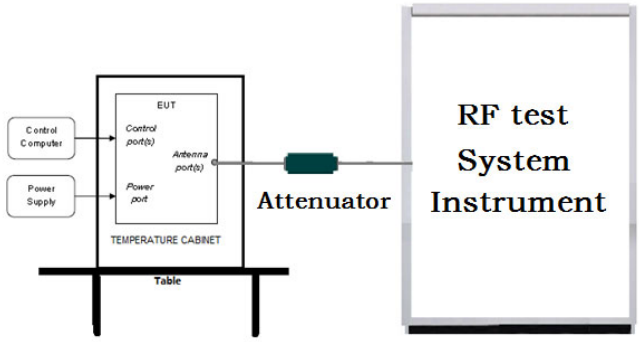 Remark: Offset=Cable loss+ attenuation factor.
Test Procedure:	a) Set RBW = 100 kHz. b) Set the VBW ⩾[3 × RBW]. c) Detector = peak. d) Trace mode = max hold. e) Sweep = auto couple. f) Allow the trace to stabilize. g) Measure the maximum width of the emission that is constrained by the frequencies associated with the two outermost amplitude points (upper and lower frequencies) that are attenuated by 6 dB relative to the maximum level measured in the fundamental emission.
Limit:	≥ 500 kHz
Test Mode:	Transmitting
Test Results:	Pass

Test Frequency (MHz)	6dB Occupy Bandwidth (kHz)	Limit (kHz)	Result
915	503.60	≥500	Pass

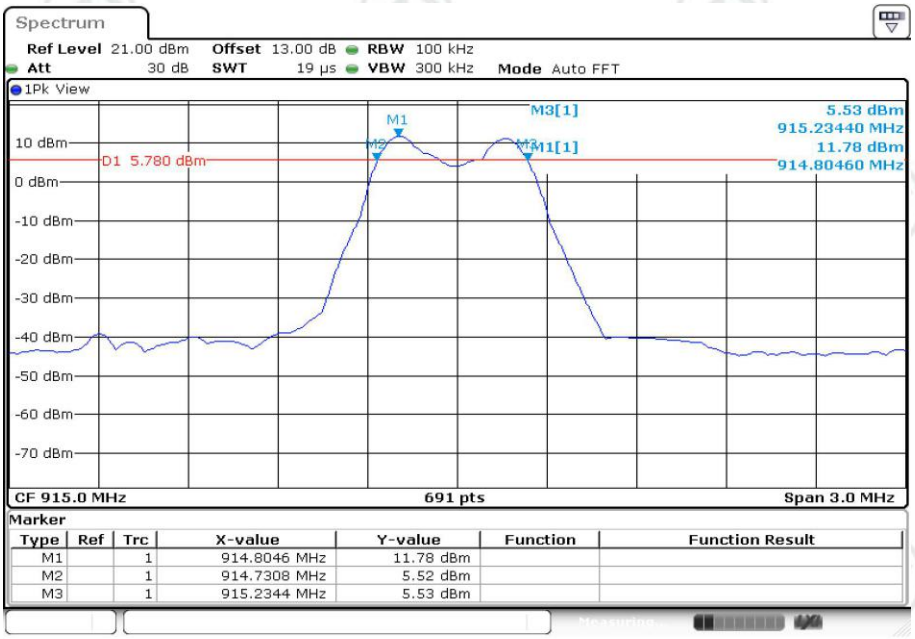

Date: 17.OCT.2021 13:59:43

7.4 Maximum Power Spectral Density

Test Requirement:	47 CFR Part 15C Section 15.247 (e)
Test Method:	ANSI C63.10 2013
Test Setup:	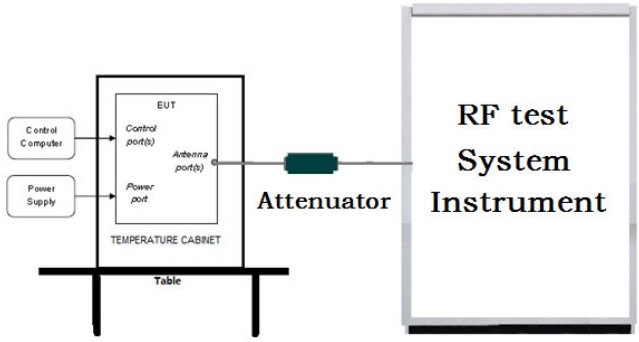 Remark: Offset=Cable loss+ attenuation factor.
Test Procedure:	a) Set analyzer center frequency to DTS channel center frequency. b) Set the span to 1.5 times the DTS bandwidth. c) Set the RBW to 3 kHz ＜ RBW ＜ 100 kHz. d) Set the VBW ＞ [3 × RBW]. e) Detector = peak. f) Sweep time = auto couple. g) Trace mode = max hold. h) Allow trace to fully stabilize. i) Use the peak marker function to determine the maximum amplitude level within the RBW. j) If measured value exceeds requirement, then reduce RBW (but no less than 3 kHz) and repeat.
Limit:	≤8.00dBm/3kHz
Test Mode:	Transmitting
Test Results:	Pass

Test Frequency (MHz)	Power Spectral Density (dBm/3kHz)	Limit (dBm/3kHz)	Result
915	7.65	≤8.00	Pass

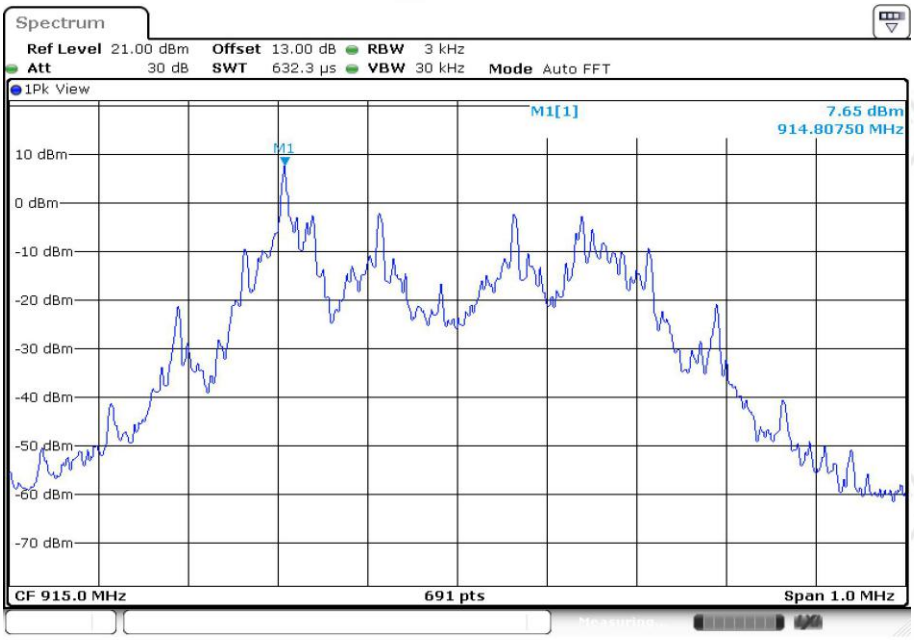

Date: 17.OCT.2021 10:48:28

7.5 Band Edge measurements and Conducted Spurious Emission

Test Requirement:	47 CFR Part 15C Section 15.247 (d)
Test Method:	ANSI C63.10 2013
Test Setup:	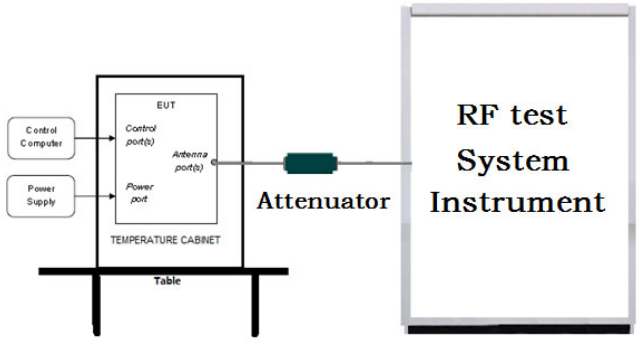 Remark: Offset=Cable loss+ attenuation factor.
Test Procedure:	a) Set RBW =100KHz. b) Set VBW = 300KHz. c) Sweep time = auto couple. d) Detector = peak. e) Trace mode = max hold. f) Allow trace to fully stabilize. g) Use peak marker function to determine the peak amplitude level.
Limit:	In any 100 kHz bandwidth outside the frequency band in which the spread spectrum intentional radiator is operating, the radio frequency power that is produced by the intentional radiator shall be at least 20 dB below that in the 100 kHz bandwidth within the band that contains the highest level of the desired power, based on either an RF conducted or a radiated measurement.
Test Mode:	Transmitting
Test Results:	Pass

Test Frequency(MHz)	Emission Level(dBm)	Limit(dBm)	Result
614	-46.41	-8.89	Pass
960	-44.77	-8.89	Pass

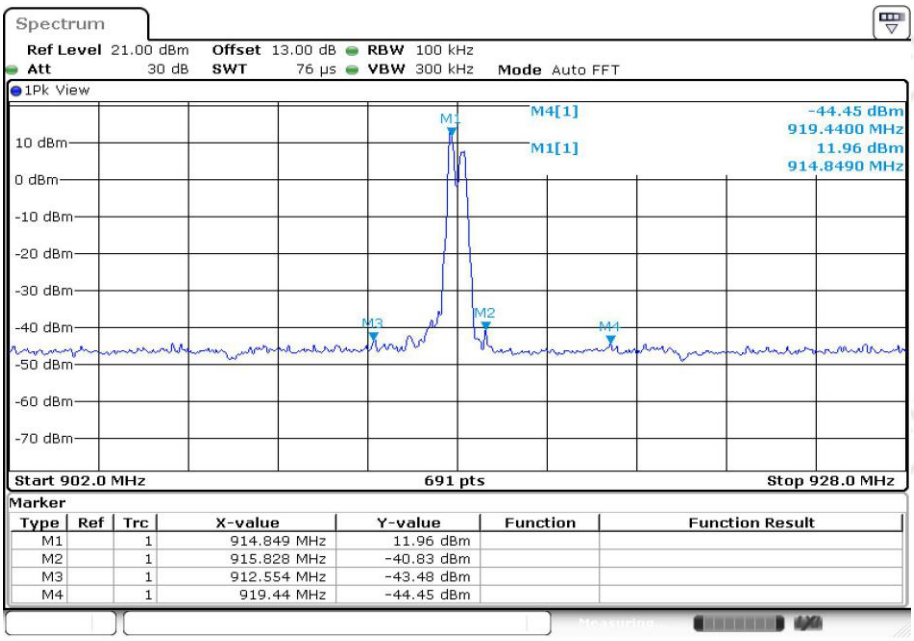

Date: 17.OCT.2021 12:33:51

Band-edge Measurement, Fundamental

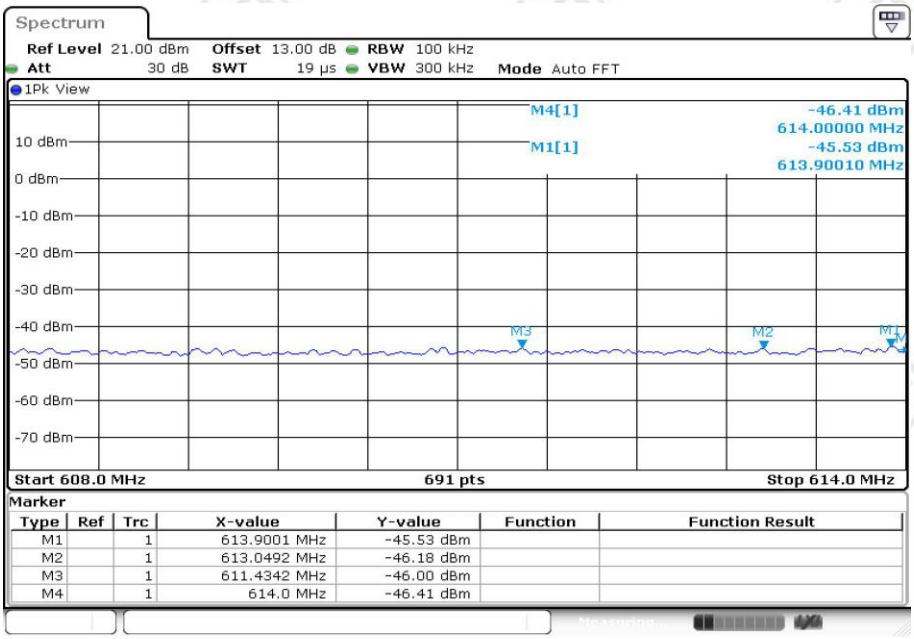

Marker

Type	Ref	Trc	X-value	Y-value	Function	Function Result
M1		1	613.9001 MHz	-45.53 dBm		
M2		1	613.0492 MHz	-46.18 dBm		
M3		1	611.4342 MHz	-46.00 dBm		
M4		1	614.0 MHz	-46.41 dBm		

Date: 17.OCT.2021 12:38:01

Band-edge Measurement, Low Channel, Restricted Frequency

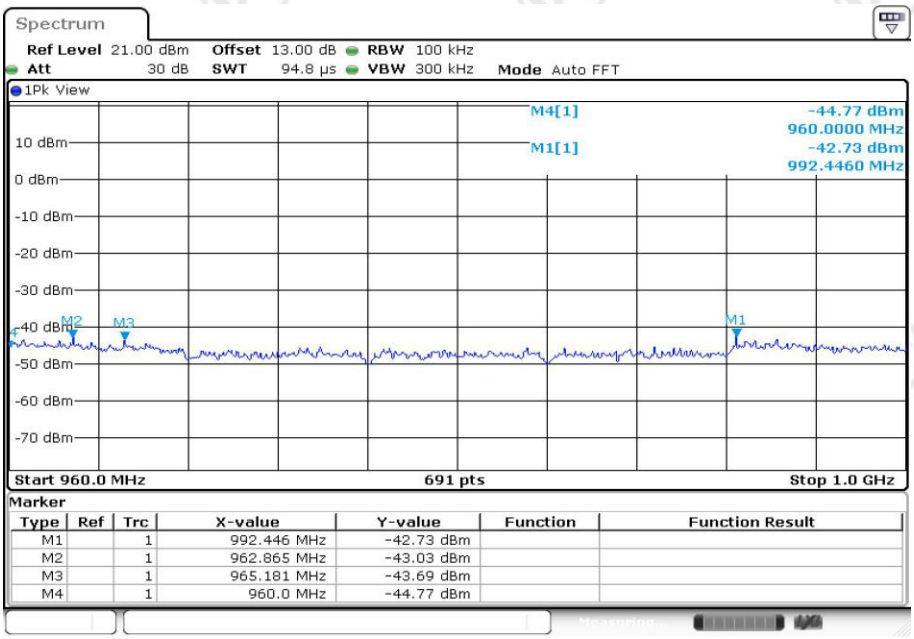

Marker

Type	Ref	Trc	X-value	Y-value	Function	Function Result
M1		1	992.446 MHz	-42.73 dBm		
M2		1	962.865 MHz	-43.03 dBm		
M3		1	965.181 MHz	-43.69 dBm		
M4		1	960.0 MHz	-44.77 dBm		

Date: 17.OCT.2021 12:40:37

Band-edge Measurement, High Channel, Restricted Frequency

7.6 Radiated Spurious Emission & Restricted bands

Test Requirement:	47 CFR Part 15C Section 15.209 and 15.205
Test Method:	ANSI C63.10 2013
Test Site:	Measurement Distance: 3m (Semi-Anechoic Chamber)
Receiver Setup:	

Frequency	Detector	RBW	VBW	Remark
0.009MHz-0.090MHz	Peak	10kHz	30kHz	Peak
0.009MHz-0.090MHz	Average	10kHz	30kHz	Average
0.090MHz-0.110MHz	Quasi-peak	10kHz	30kHz	Quasi-peak
0.110MHz-0.490MHz	Peak	10kHz	30kHz	Peak
0.110MHz-0.490MHz	Average	10kHz	30kHz	Average
0.490MHz -30MHz	Quasi-peak	10kHz	30kHz	Quasi-peak
30MHz-1GHz	Quasi-peak	100 kHz	300kHz	Quasi-peak
Above 1GHz	Peak	1MHz	3MHz	Peak
	Peak	1MHz	10kHz	Average

Limit:

Frequency	Field strength (microvolt/meter)	Limit (dBuV/m)	Remark	Measurement distance (m)
0.009MHz-0.490MHz	2400/F(kHz)	-	-	300
0.490MHz-1.705MHz	24000/F(kHz)	-	-	30
1.705MHz-30MHz	30	-	-	30
30MHz-88MHz	100	40.0	Quasi-peak	3
88MHz-216MHz	150	43.5	Quasi-peak	3
216MHz-960MHz	200	46.0	Quasi-peak	3
960MHz-1GHz	500	54.0	Quasi-peak	3
Above 1GHz	500	54.0	Average	3

Note: 15.35(b), Unless otherwise specified, the limit on peak radio frequency emissions is 20dB above the maximum permitted average emission limit applicable to the equipment under test. This peak limit applies to the total peak emission level radiated by the device.

Test Setup:	

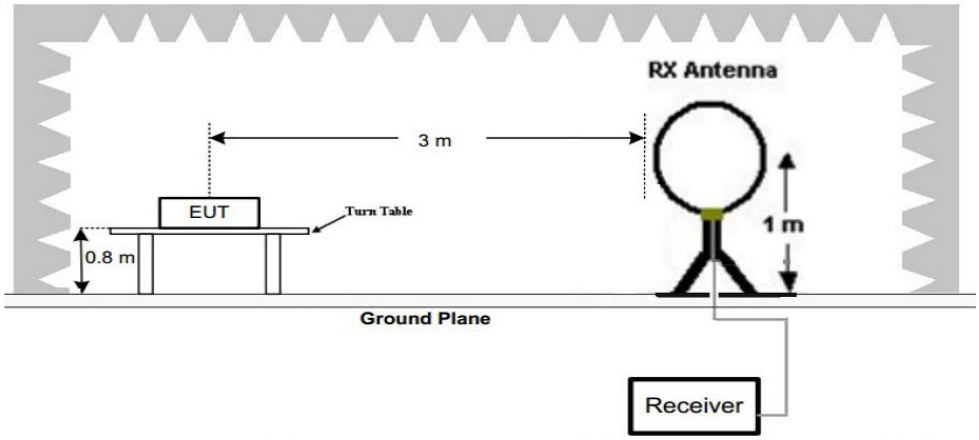

Figure 1. Below 30MHz

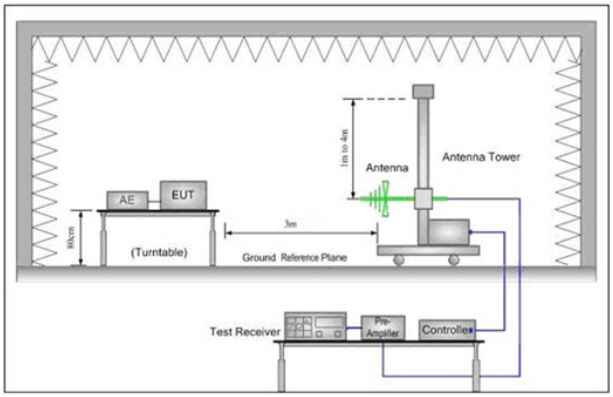

Figure 2. 30MHz to 1GHz

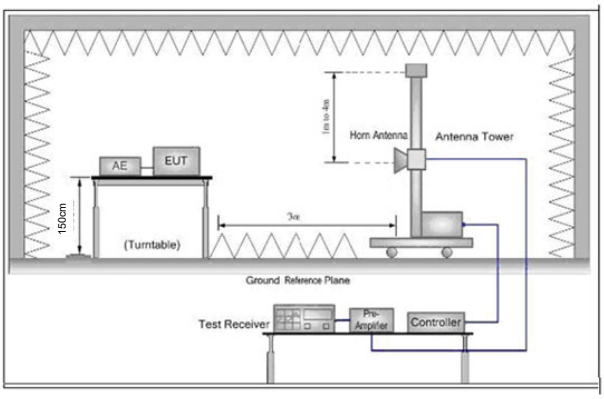

Figure 3. Above 1 GHz

Test Procedure:	a. 1) Below 1G: The EUT was placed on the top of a rotating table 0.8 meters above the ground at a 3 meter semi-anechoic camber. The table was rotated 360 degrees to determine the position of the highest radiation. 2) Above 1G: The EUT was placed on the top of a rotating table 1.5 meters above the ground at a 3 meter semi-anechoic camber. The table was rotated 360 degrees to determine the position of the highest radiation. Note: For the radiated emission test above 1GHz: Place the measurement antenna away from each area of the EUT determined to be a source of emissions at the specified measurement distance, while keeping the measurement antenna aimed at the source of emissions at each frequency of significant emissions, with polarization oriented for maximum response. The measurement antenna may have to be higher or lower than the EUT, depending on the radiation pattern of the emission and staying aimed at the emission source for receiving the maximum signal. The final measurement antenna elevation shall be that which maximizes the emissions. The measurement antenna elevation for maximum emissions shall be restricted to a range of heights of from 1 m to 4 m above the ground or reference ground plane. b. The EUT was set 3 meters away from the interference-receiving antenna, which was mounted on the top of a variable-height antenna tower. c. The antenna height is varied from one meter to four meters above the ground to determine the maximum value of the field strength. Both horizontal and vertical polarizations of the antenna are set to make the

	measurement. d. For each suspected emission, the EUT was arranged to its worst case and then the antenna was tuned to heights from 1 meter to 4 meters (for the test frequency of below 30MHz, the antenna was tuned to heights 1 meter) and the rotatable table was turned from 0 degrees to 360 degrees to find the maximum reading. e. The test-receiver system was set to Peak Detect Function and Specified Bandwidth with Maximum Hold Mode. f. If the emission level of the EUT in peak mode was 10dB lower than the limit specified, then testing could be stopped and the peak values of the EUT would be reported. Otherwise the emissions that did not have 10dB margin would be re-tested one by one using peak, quasi-peak or average method as specified and then reported in a data sheet. g. Test the EUT in the lowest channel (2402MHz),the middle channel (2440MHz),the Highest channel (2480MHz) h. The radiation measurements are performed in X, Y, Z axis positioning for Transmitting mode, and found the X axis positioning which it is the worst case. i. Repeat above procedures until all frequencies measured was complete.
Test Mode:	Transmitting
Test Results:	Pass

Radiated Spurious Emission below 1GHz:

Test Graph

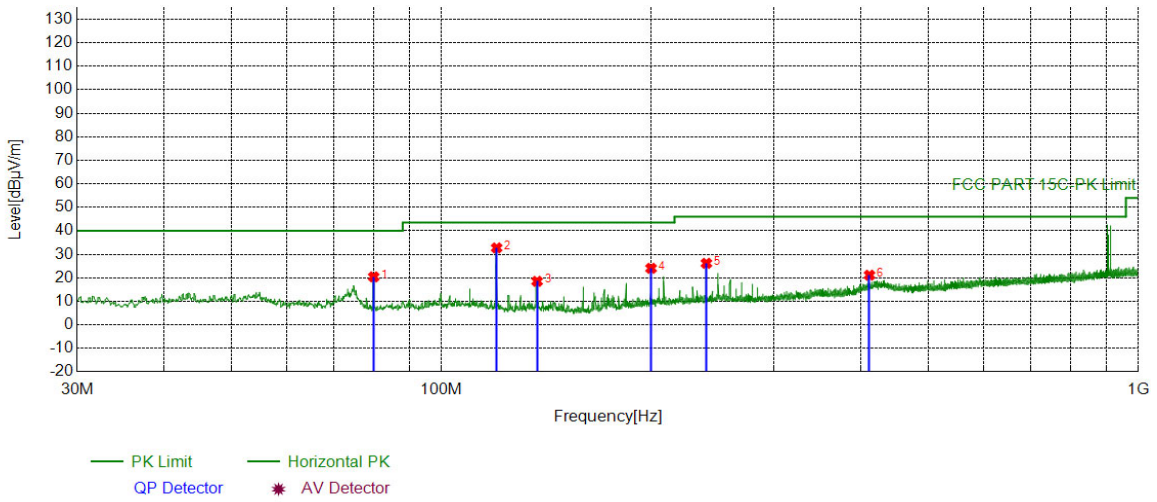

Suspected List									
NO	Freq. [MHz]	Factor [dB]	Reading [dBµV]	Level [dBµV/m]	Limit [dBµV/m]	Margin [dB]	Result	Polarity	Remark
1	79.9600	-22.56	42.97	20.41	40.00	19.59	PASS	Horizontal	PK
2	120.0250	-20.08	52.81	32.73	43.50	10.77	PASS	Horizontal	PK
3	137.1957	-21.90	40.41	18.51	43.50	24.99	PASS	Horizontal	PK
4	199.9610	-17.84	41.89	24.05	43.50	19.45	PASS	Horizontal	PK
5	240.0260	-16.77	42.95	26.18	46.00	19.82	PASS	Horizontal	PK
6	411.4421	-12.69	33.81	21.12	46.00	24.88	PASS	Horizontal	PK

Test Graph

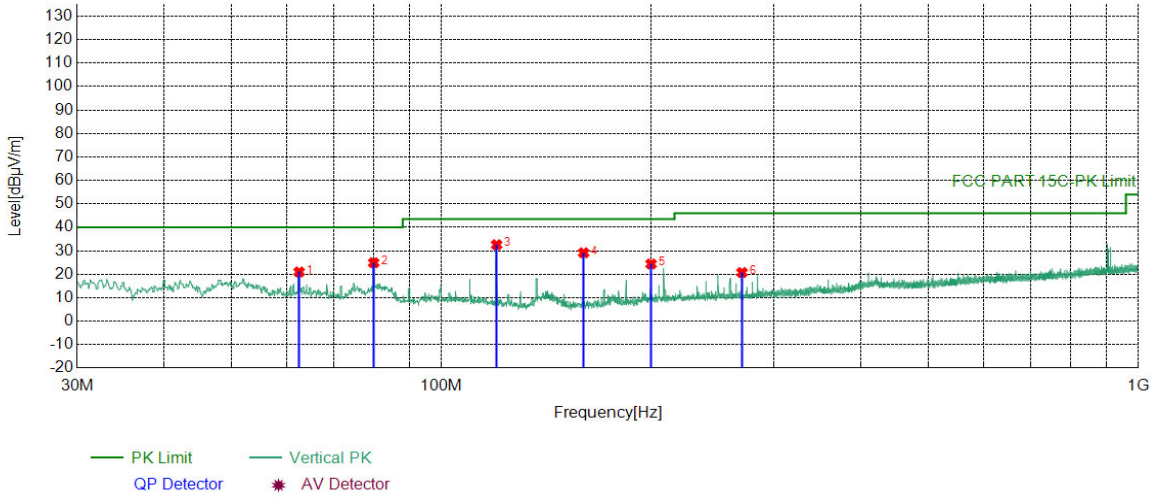

Suspected List									
NO	Freq. [MHz]	Factor [dB]	Reading [dBμV]	Level [dBμV/m]	Limit [dBμV/m]	Margin [dB]	Result	Polarity	Remark
1	62.4983	-19.07	40.04	20.97	40.00	19.03	PASS	Vertical	PK
2	79.9600	-22.56	47.46	24.90	40.00	15.10	PASS	Vertical	PK
3	120.0250	-20.08	52.66	32.58	43.50	10.92	PASS	Vertical	PK
4	159.9930	-21.15	50.29	29.14	43.50	14.36	PASS	Vertical	PK
5	199.9610	-17.84	42.22	24.38	43.50	19.12	PASS	Vertical	PK
6	270.0020	-16.15	36.88	20.73	46.00	25.27	PASS	Vertical	PK

Radiated Spurious Emission above 1GHz:

Mode:		Transmitting					Channel:	914.88 MHz	
NO	Freq. [MHz]	Factor [dB]	Reading [dBμV]	Level [dBμV/m]	Limit [dBμV/m]	Margin [dB]	Result	Polarity	Remark
1	1181.6182	0.81	43.95	44.76	74.00	29.24	PASS	Horizontal	PK
2	1955.8956	4.32	42.32	46.64	74.00	27.36	PASS	Horizontal	PK
3	2681.9682	5.35	41.41	46.76	74.00	27.24	PASS	Horizontal	PK
4	5010.1340	-15.81	57.48	41.67	74.00	32.33	PASS	Horizontal	PK
5	7380.2920	-11.55	54.60	43.05	74.00	30.95	PASS	Horizontal	PK
6	10397.4932	-6.28	53.02	46.74	74.00	27.26	PASS	Horizontal	PK
7	1102.6103	0.85	44.25	45.10	74.00	28.90	PASS	Vertical	PK
8	1293.6294	1.04	43.77	44.81	74.00	29.19	PASS	Vertical	PK
9	2870.5871	6.09	41.17	47.26	74.00	26.74	PASS	Vertical	PK
10	5002.1335	-15.82	57.36	41.54	74.00	32.46	PASS	Vertical	PK
11	7040.2694	-11.72	55.09	43.37	74.00	30.63	PASS	Vertical	AV
12	10176.4784	-7.10	52.61	45.51	74.00	28.49	PASS	Vertical	PK

Remark:

1) The field strength is calculated by adding the Antenna Factor, Cable Factor & Preamplifier. The basic equation with a sample calculation is as follows:

   Final Test Level =Receiver Reading + Antenna Factor + Cable Factor – Preamplifier Factor

2) Scan from 9kHz to 18GHz, the disturbance above 13GHz and below 30MHz was very low. As shown in this section, for frequencies above 1GHz, the field strength limits are based on average limits. However, the peak field strength of any emission shall not exceed the maximum permitted average limits specified above by more than 20 dB under any condition of modulation. So, only the peak measurements were shown in the report.