RETAILAWARE

USER MANUAL

WIRELESS VISIBLE LIGHT SENSOR
VLSW2

NOTE: Changes or modifications not expressly approved by Retail Aware Inc. could void the user's authority to operate the equipment.

NOTE: This equipment has been tested and found to comply with the limits for a Class A digital device, pursuant to part 15 of the FCC Rules. These limits are designed to provide reasonable protection against harmful interference when the equipment is operated in a commercial environment. This equipment generates, uses, and can radiate radio frequency energy and, if not installed and used in accordance with the instruction manual, may cause harmful interference to radio communications. Operation of this equipment in a residential area is likely to cause harmful interference in which case the user will be required to correct the interference at his own expense.

NOTE: This device complies with Part 15 of the FCC Rules. Operation is subject to the following two conditions:

1. This device may not cause harmful interference, and
2. This device must accept any interference received, including interference that may cause undesired operation.

To comply with RF exposure requirements, Please maintain 20cm separation from the device.

NOTE: Changes or modifications made by the user and not expressly approved by the party responsible for compliance could void the user's authority to operate the equipment.

NOTE: This equipment has been tested and found to comply with the limits for a Class B digital device, pursuant to part 15 of the FCC Rules. These limits are designed to provide reasonable protection against harmful interference in a residential installation. This equipment generates, uses and can radiate radio frequency energy and, if not installed and used in accordance with the instructions, may cause harmful interference to radio communications. However, there is no guarantee that interference will not occur in a particular installation. If this equipment does cause harmful interference to radio or television reception, which can be determined by turning the equipment off and on, the user is encouraged to try to correct the interference by one or more of the following measures:

- Reorient or relocate the receiving antenna.
- Increase the separation between the equipment and receiver.
- Connect the equipment into an outlet on a circuit different from that to which the receiver is connected.
- Consult the dealer or an experienced radio/TV technician for help

VLSW2 - WIRELESS VISIBLE LIGHT SENSOR

Parameter	Value	Units
Battery (non-rechargable)	CR2354	-
Battery Capacity	530	mAh
Operating Voltage	3	VDC
Peak Power Consumption	60	mW
Peak Current Draw	20	mA
Average Power Consumption	15	uW
Average Current Draw	5	uA
Typical Battery Life	5 milliion	Triggers
Radio Broadcast Range[1,2]	250	ft
Minimum Light Threshold Setting	17	lux
Maximum Light Threshold Setting	115	lux
Operating Temperature	-10° to 40°	C
Weight	35	grams
Length	61	mm
Width	36	mm
Height	25	mm

[1] when paired with a RAIS2.1 model base station
[2] practical range varies by placement

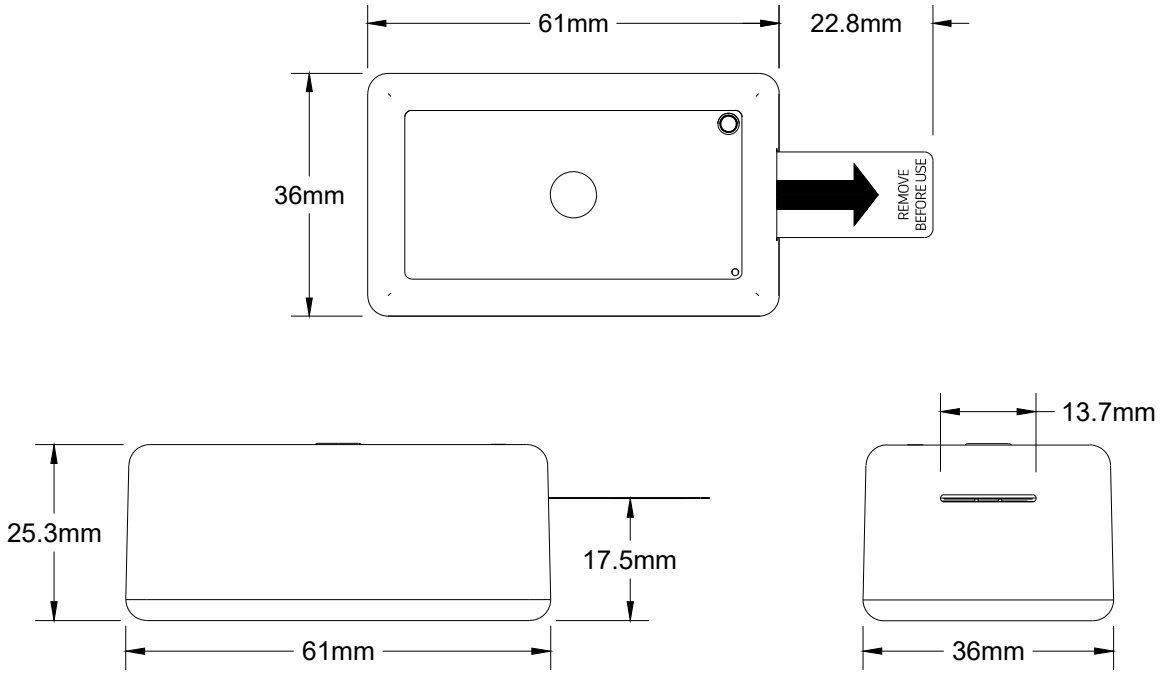

Installation and Operation Instructions:

1. Use the Retail Aware install app to select the desired sensor placement.
2. Use the install app to scan the sense device into the sensor placement.
3. Remove the battery tab from the sense device.
4. Mount to the physical placement with the included foam tape, wedge, or other method.
5. Wait for the device to show as "online" in the Retail Aware portal.
6. If needed, click the button to reset the sense device.