KEYLESS-SYSTEM

USE, INSTALLATION AND MAINTENANCE MANUAL

ENG

TABLE OF CONTENTS

1 GENERAL INFORMATION 3
1.1 Aim of the document 3
1.2 Recipients 3
1.3 Symbols and safety warnings used in the document 3
1.4 Regulations 4
2 SAFETY INSTRUCTIONS 6
3 FUNCTIONAL SAFETY 6
4 FEATURES AND FUNCTIONALITIES 7
4.1 Intended uses 8
4.2 Communication scheme 9
4.3 Connector and pinout 10
4.3.1 Ecu Keyless 10
4.3.2 Antenna-ext 11
4.4 Ecu Keyless electrical connection with the button 12
5 SOFTWARE PROGRAMMING AND DEVELOPMENT 13
5.1 VT3 application software development tool 13
5.2 CUST programming tool 14
5.2.1 KEYLESS_Calibration 14
6 INSTALLATION 15
6.1 Ecu Keyless Installation 15
6.1.1 Accessories 15
6.1.2 Procedure 16
6.2 Antenna-ext installation 18
6.2.1 Accessories 18
6.2.2 Procedure 18
7 TECHNICAL DATA 20
7.1 Ecu Keyless 20
7.2 Keyfob 21
7.3 Wallet 22
7.4 Antenna-ext 22
8 BATTERY REPLACEMENT 23
8.1 Accessories 23
8.2 Procedure 23
9 KEYFOB RECOGNITION WITH LOW BATTERY 23
10 MAINTENANCE AND DISPOSAL 25
10.1 Maintenance 25
10.2 Repairing 25
10.3 Disposal 25
10.4 Product Environmental Compliance 25

Copyright Cobo Spa. All rights reserved. Contents subject to change without notice.

ENG

1 GENERAL INFORMATION

1.1 Aim of the document

This manual applies to the Keyless-System.

It provides installation and set-up instructions.

1.2 Recipients

Qualified technicians for mechanical assembly and electrical connection.

1.3 Symbols and safety warnings used in the document

The symbols and graphic indications used in this document are compliant to the ANSI Z535 standard. It corresponds to the international standards ISO 3864-1 and ISO 3864-2.

Safety Warning Levels

	⚠ WARNING
	It identifies a safety warning whose failure to comply may result in death or serious injury.
	⚠ CAUTION
	It identifies a safety warning whose failure to comply may result in minor or moderate injury.
	NOTICE
	It identifies a safety warning whose failure to comply may result in material damage to the device and/or interconnected equipment.

Other panels

	INFORMATION NOTE
	It identifies an information note.

Copyright Cobo Spa. All rights reserved. Contents subject to change without notice.

1.4 Regulations

Standard

Mechanical and climatic standards	
Regulation	**Description**
IEC 60068-2	Environmental testing Part 2: Tests - ALL PARTS
IEC 60529:1989 + AMD1:1999 + AMD2:2013 + COR1:2019	Degrees of protection provided by enclosures (IP Code)

Chemical standards	
Regulation	**Description**
ISO 16750-5:2023	Road vehicles — Environmental conditions and testing for electrical and electronic equipment. Part 5: Chemical loads

Electrical standards	
Regulation	**Description**
ISO 16750-2:2012	Road vehicles — Environmental conditions and testing for electrical and electronic equipment. Part 2: Electrical loads
ISO 7637-2:2011	Road vehicles — Electrical disturbances from conduction and coupling Part 2: Electrical transient conduction along supply lines only

EMC standard	
Regulation	**Description**
UNI EN ISO 14982:2009	Agricultural and forestry machinery - Electromagnetic compatibility - Test methods and acceptance criteria

Valid only for the Ecu Keyless:

EMC standard	
Regulation	**Description**
ISO 13766-1:2018	Earth-moving and building construction machinery Electromagnetic compatibility (EMC) of machines with internal electrical power supply Part 1: General EMC requirements under typical electromagnetic environmental conditions
ISO 13766-2:2018	Earth-moving and building construction machinery Electromagnetic compatibility (EMC) of machines with internal electrical power supply Part 2: Additional EMC requirements for functional safety

Functional safety		
Regulation	**Level**	**Description**
EN ISO 13849-1:2015	PL d	Safety of machinery - Safety-related parts of control systems - Part 1: General principles for design
EN ISO 13849-2:2012	PL d	Safety of machinery - Safety-related parts of control systems - Part 2: Validation

Markings

CE marking	
Directive	**Description**
2014/53/EU	Radio Equipment Directive (RED)
2006/42/EC	Machinery Directive

Copyright Cobo Spa. All rights reserved. Contents subject to change without notice.

FCC marking	
Regulation	**Description**
CFR Title 47 Part 15B[1]	Code of Federal Regulations Title 47 - Part 15 – Radio Frequency Devices[2]

ISED marking	
Regulation	**Description**
ICES-003[3]	Interference-Causing Equipment Standard 003[4]

E marking	
Regulation	**Description**
UN/ECE-R10 Rev. 6	Uniform provisions concerning the approval of vehicles with regard to electromagnetic compatibility

1 FCC Idetification:

- Ecu Keyless: 2AVOV-KEYLESSECU
- Antenna-ext: 2AVOV-KEYLESSEXT

2 This device complies with Part 15 of the FCC Rules. Operation is subject to the following two conditions: (1) this device may not cause harmful interference, and (2) this device must accept any interference received, including interference that may cause undesired operation.

“No changes shall be made to the equipment without the manufacturer’s permission as this may void the user’s authority to operate the equipment.”

3 ISED Identification:

- Ecu Keyless: 25864-KEYLESSECU
- Antenna-ext: 25864-KEYLESSEXT

4 This device contains licence-exempt transmitter(s)/receiver(s) that comply with Innovation, Science and Economic Development Canada’s licence-exempt RSS(s). Operation is subject to the following two conditions:

1. This device may not cause interference.
2. This device must accept any interference, including interference that may cause undesired operation of the device.

Cet appareil contient des émetteurs/récepteurs exemptés de licence conformes aux RSS (RSS) d’Innovation, Sciences et Développement économique Canada. L’exploitation est autorisée aux deux conditions suivantes:

1. L’appareil ne doit pas produire de brouillage.
2. L’utilisateur de l’appareil doit accepter tout brouillage radioélectrique subi, même si le brouillage est susceptible d’en compromettre le fonctionnement.

Copyright Cobo Spa. All rights reserved. Contents subject to change without notice.

ENG

2 SAFETY INSTRUCTIONS

NOTICE

Risk of permanent loss of advanced system functionality caused by loss or misplacement of the wallet.

The wallet is non-replaceable and cannot be recovered.

1) Store the wallet securely and maintain appropriate backup procedures, if applicable.

NOTICE

Risk of material damage and/or malfunction due to improper use, incorrect installation or configuration of the device

1) Ensure that only the personnel listed under 'Recipients' perform the installation and maintenance procedures described in the manual.
2) Check that the use of the device is included in the chapter “Intended Uses”.
3) Read this manual and follow the instructions carefully.

INFORMATION NOTE

Be sure to follow the instructions in the manual to avoid invalidating the warranty.

3 FUNCTIONAL SAFETY

INFORMATION NOTE

For Safety Relevant applications please refer to the respective Safety Manual.

Copyright Cobo Spa. All rights reserved. Contents subject to change without notice.

4 FEATURES AND FUNCTIONALITIES

The Keyless-System is an electronic system that recognizes the authorized operator and allows vehicle start-up without the need for a mechanical key or manual actions.

It can be configured with different devices according to project requirements and can be fully customized.

The system architecture is based on the following interacting elements:

- Basic system, consisting of a central unit (ECU Keyless), a key device (Keyfob) and a pairing device (Wallet)
- External antenna, optional

Keyless ECU

The Keyless ECU is the programmable electronic control unit that serves as the core of the system and provides the following features:

- Vehicle start/stop control via a customisable RGB LED-backlit button[5]
- CAN interface for communication with the external Antenna and other vehicle ECUs
- NFC and BLE interfaces to enable communication with the Keyfob and the Wallet
- 2 complementary outputs of the pushbutton certified for Functional Safety[6]
- Mechanical interchangeability with COBO starter switches[5]
- Vehicle functions configurable via ECU/machine SW[6]
- Programmable with VT3 Visual Tool[6]

Keyfob

The Keyfob is a wireless key designed for user identification, featuring:

- NFC and BLE technologies for communication and user recognition
- Unique identifier ensuring reliable identification
- Replaceable battery power supply[6]
- Three customisable buttons with ideograms and logos[5] for system interaction

Wallet

The Wallet is a passive NFC-based device permanently bound to the Keyless ECU, featuring:

- Pairing of the Keyfob or the external Antenna with the ECU
- Customizable logo[5]

[5] View the dedicated chapter in the document "Keyless-System-ENG-SP".
[6] View the dedicated chapter in this document.

Copyright Cobo Spa. All rights reserved. Contents subject to change without notice.

Antenna-ext

The external Antenna extends the BLE range of the system, features:

- Crypted CAN communication with the Ecu Keyless
- NFC user recognition for door unlocking with depleted Keyfob battery

4.1 Intended uses

The device is designed for application on:

- Off-highway vehicles

Copyright Cobo Spa. All rights reserved. Contents subject to change without notice.

4.2 Communication scheme

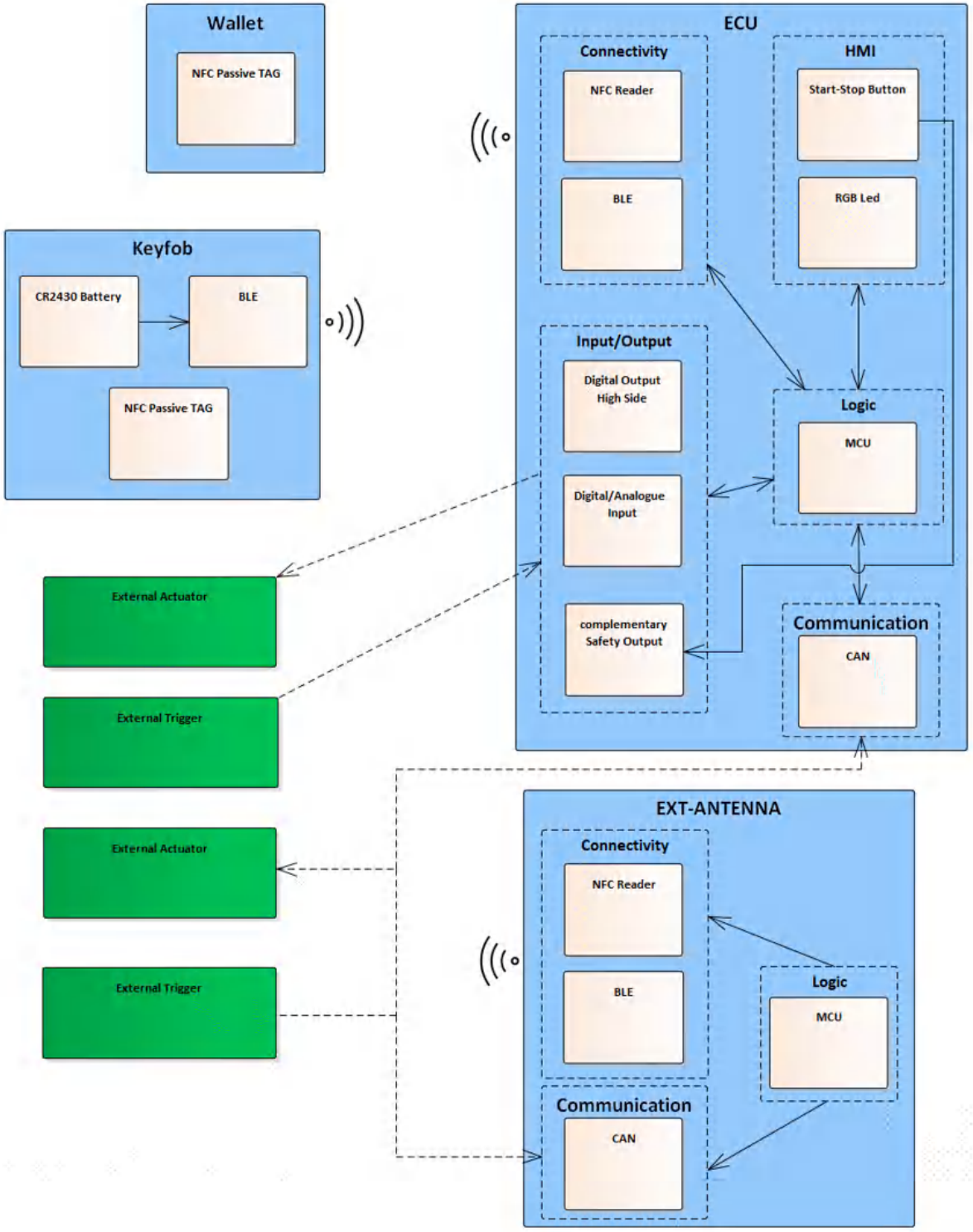

Copyright Cobo Spa. All rights reserved. Contents subject to change without notice.

4.3 Connector and pinout

NOTICE

Risk of damage to the connector and/or its counterpart if disconnected and not protected

The connector's IP protection grade is only guaranteed when connected to its counterpart.

Exposure of connector and counterpart contacts to air and moisture can cause an oxide layer to accumulate on their surface. This can lead to a reduction in electrical performance, loss of efficiency and malfunctions.

1) To ensure IP protection grade, keep the connector connected to its counterpart
2) Do not disconnect the connector counterpart unless it is necessary to remove the device from its housing
3) In the case of a disconnection, protect the connection and the connector counterpart

4.3.1 Ecu Keyless

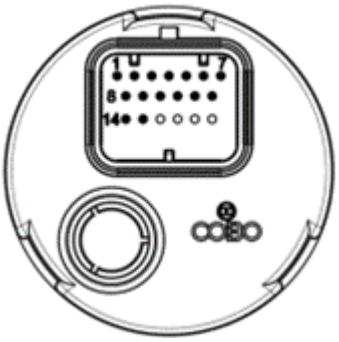

26-pin Superseal connector (5-6447223-0) integrated directly into the plastic case.

The first 15 pins of the connector are used (see figure).

The counterpart connector to be used is the SuperSeal 26-pin Series Connector (PN 3-1437290-7), use pins and cross section cable appropriate to the current applied on it.

Use sealing plug (PN 4-1437284-3) on the non-wired pins to ensure IP protection of the core unit.

Pin	Name	Description	Type
1	VBAT	Positive power supply	A
2	GND	Negative power supply	B
3	IN0	Digital/analogue input 0	F
4	DOH0	High side digital output configurable as Input/ Output 0	C
5	IN1	Digital/analogue input 1	F
6	DOH1	High Side digital output configurable as input/ output 1	C
7	IN2	Digital/analogue input 2	F
8	DOH2	High Side digital output configurable as input/ output 2	C
9	CANH	CAN Bus High	E
10	DOH3	High Side digital output configurable as input/ output 3	C
11	CANL	CAN Bus Low	E
12	BUTTON 0**Ecu Keyless [▸ 11]**	Button output 0	D
13	BUTTON 1**Ecu Keyless [▸ 11]**	Button output 1	D
14	IN3	Digital/analogue input 3	F
15	-	-	-

Copyright Cobo Spa. All rights reserved. Contents subject to change without notice.

Pin configuration table

Pin type A	
Max. input voltage	+33.7V
Max. pin current	Continuous use: 5A Impulsive use: 10A (max 300ms)
Pin type B	
Max. pin current	200mA
Pin type C	
Operating input voltage range	0V..+32V
Minimum input impedance	60kΩ
Operating output voltage range	0V..+32V
Max. output current	1A
Pin type D	
Certified for Functional Safety, PL d, according to ISO 13849-1/-2	
Operating voltage range	0V..+VB
Max. current	0.01A
Impedance	View chapter **Ecu Keyless electrical connection with the button [▶ 12]** to know the button internal connection
Pin type E	
Physical layer	ISO11898 Standard Hi-Speed CAN
Input pin protection	±36V
Transient protection (ESD)	±30kV Human body model (150pF per 330Ω)
Pin type F	
Redundant digital/ analogue input	
Max. input voltage	Nominal voltage: 0V..32V
Minimum impedance	200kΩ

Functional Safety certified.

INFORMATION NOTE

For further information on VT3 Visual Tool software programming (Software Installation), please refer to the 'Specific Supplement' of the device.

4.3.2 Antenna-ext

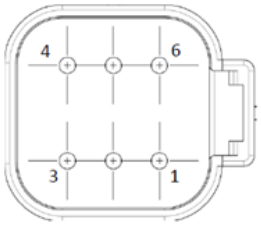

Deutsch 6 pin connector (DT13-6P) integrated directly into the plastic case.

The counterpart connector to be used is the DEUTSCH 6-pin Series Connector (DT06-6S-C015), use pins and cross section cable appropriate to the current applied on it.

The use of a sealing plug (4-1437284-3) on the unwired pins ensures the IP protection of the central unit.

Pin	Name	Description	Type
1	VBAT	Positive power supply	A
2	GND	Negative power supply	B
3	-	-	-
4	-	-	-
5	CANH	CAN-BUS High	C
6	CANL	CAN-BUS Low	C

Copyright Cobo Spa. All rights reserved. Contents subject to change without notice.

Pin configuration table

Pin type A	
Max. input voltage	+36V
Max. pin current	Continuous use: 2A Impulsive use: 10A (max 300ms)
Pin type B	
Max. pin current	2A
Pin type C	
Physical layer	ISO11898 Standard Hi-Speed CAN
Input pin protection	±36V
Transient protection (ESD)	±6kV Human body model (100pF per 1.5kΩ)

INFORMATION NOTE

For further information on VT3 Visual Tool software programming (Software Installation), please refer to the 'Specific Supplement' of the device.

4.4 Ecu Keyless electrical connection with the button

In the following figure it is reported the redundant button schematic to allow a better integration of the system in the vehicle.

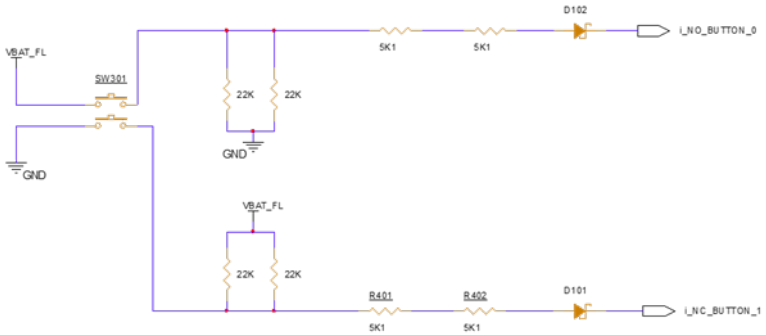

Copyright Cobo Spa. All rights reserved. Contents subject to change without notice.

ENG

5 SOFTWARE PROGRAMMING AND DEVELOPMENT

The basic system requires software deployment via VT3 Visual Tool to operate.

Parameter customization is performed via CUST.

The required parameters depend on the vehicle type and must be derived from field measurements.

INFORMATION NOTE

For information on system calibration, refer to chapter “Calibration” in the document “Keyless-System-ENG-QS”.

5.1 VT3 application software development tool

The use of the product is based on programming that must be carried out before the device can be used.

For this purpose, the product is supplied with the preparation for loading the application software, which the customer can implement independently via the VT3 Visual Tool programming system, owned by COBO.

VT3 Visual Tool is a comprehensive suite for programming devices that control mobile vehicles. It allows the graphics and logic of the device to be programmed via a WYSIWYG graphical interface that applies the IEC61131 and C standard languages.

⚠ WARNING

The customer is responsible for the implementation of its own software.

1) Carry out approval tests by the competent bodies according to the regulations in force.

⚠ WARNING

Risk of injury and/or material damage due to the development of functional safety applications with VT3 Visual Tool

VT3 Visual Tool is not suitable for the development of functional safety applications with this device.

INFORMATION NOTE

To view the Terms of use refer to the EULA, which is accessible from the VT3 Visual Tool menu.

Documentation

INFORMATION NOTE

For the correct use of the programming system, please refer to the VT3 Visual Tool manual and its specific supplement, available within the software under File>vt3 manual.

INFORMATION NOTE

For further information, contact COBO customer service.

Copyright Cobo Spa. All rights reserved. Contents subject to change without notice.

ENG

	INFORMATION NOTE
	Programming and/or diagnostic tools can be provided on request.

5.2 CUST programming tool

CUST is a multi-protocol software, developed by COBO, which aims to communicate with ECUs (Electronic Control Units) and HMIs (Human Machine Interfaces).

The main objective of the CUST project is to offer the user software with a simple graphical interface that allows communication, interaction and data analysis of all COBO devices on the vehicle, through the use of a PC and a CAN PC interface.

CUST allows you to:

- Load devices with various COBO protocols and standards
- Diagnose devices with their protocols
- Downloading/uploading parameter files and event logs
- Other Features...

	INFORMATION NOTE
	For further information, please refer to the “CUST_User_Manual” available in the COBO public FTP at the following address: CUST manual

5.2.1 KEYLESS_Calibration

System parameter configuration and calibration by the user is possible via a dedicated CUST plugin.

	INFORMATION NOTE
	For more information, see the document “‘COBO-CUST KEYLESS Plugin User Manual”.

Copyright Cobo Spa. All rights reserved. Contents subject to change without notice.

ENG

6 INSTALLATION

⚠ CAUTION

Risk of exceeding FCC/ISED RF exposure limits if the radio devices are installed too close to the operator.

1) Install the radio devices at least 50 mm away from the operator's body.

NOTICE

Risk of reduced BLE communication performance due to shielding by metallic surfaces.

Metallic structures can attenuate or block the BLE signal of the system.

1) Do not install the devices behind or enclosed by metal panels or structures.

NOTICE

Risk of property damage and/or malfunction caused by the falling of the device

1) Handle the device with care

NOTICE

Risk of material damage due to modification of fixing holes

1) Do not change fixing hole dimensions

NOTICE

Risk of material damage and/or malfunction due to heat sources, strong vibrations or electromagnetic disturbances

1) Do not mount the device near sources of heat, vibration or electrical/magnetic disturbances

INFORMATION NOTE

The standard units of measurement in drawings are mm for linear dimensions and degrees for angles.

6.1 Ecu Keyless Installation

6.1.1 Accessories

Use only the components supplied with the control unit:

- Ecu Keyless
- Gasket
- Nut
- Nut cover

Copyright Cobo Spa. All rights reserved. Contents subject to change without notice.

6.1.2 Procedure

NOTICE

Risk of device malfunction due to battery disconnection

If the battery is accidentally disconnected, the device is without power.

1) Connect the device directly to the battery.
2) Do not route power through fuses or other devices.

- Identify an ECU installation location inside the cabin that ensures optimal orientation of the BLE reception lobes toward the cabin entry and the operator approach to the vehicle.

INFORMATION NOTE

For information on ECU antenna radiation lobes, see the chapter “ECU radiation lobes” in the document “Keyless-System-ENG-QS”.

- The dashboard must meet the following requirements:
  - Thickness between 1.5mm and 4mm.
  - The panel must have a flatness of 0.4mm in the mounting area to allow for an optimal seal.
  - The two parts of the plane (top and bottom) must have a parallelism of 0.2mm between them. Panels with different characteristics do not allow sealing.
  - Prefer a plastic panel for maximum system functionality. Avoid mounting the device in a metal box or similar.

- Provide the application hole pattern shown in the figure.

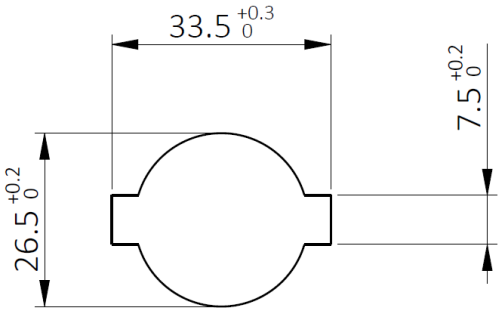

Copyright Cobo Spa. All rights reserved. Contents subject to change without notice.

3. Insert the gasket on top of the Ecu Keyless.

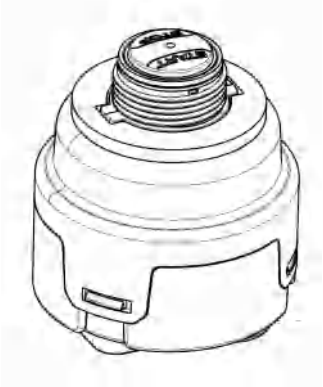

4. Insert Ecu Keyless+gasket into the panel. The gasket must remain on the inside part of the panel.

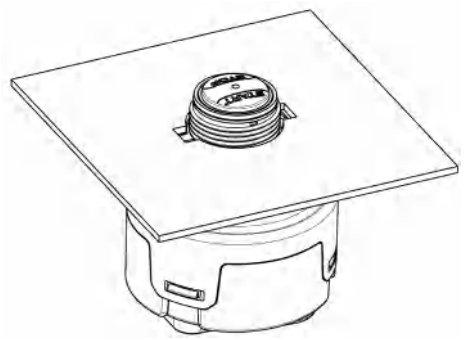

5. Screw the nut with 5Nm torque.

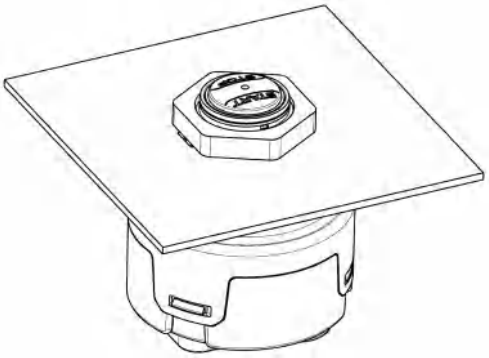

6. Push the nut cover onto the nut, paying attention to position it with the ribs along the straight side of the nut.

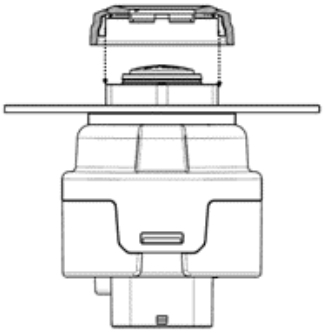

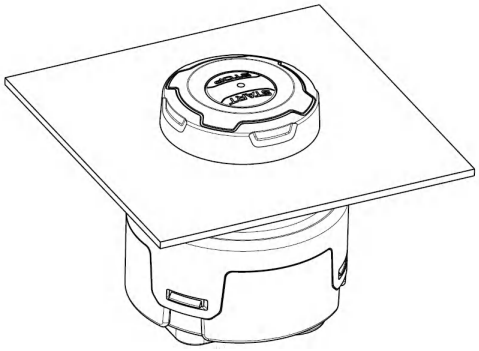

Copyright Cobo Spa. All rights reserved. Contents subject to change without notice.

7. Connect the wiring harness to the device connector.

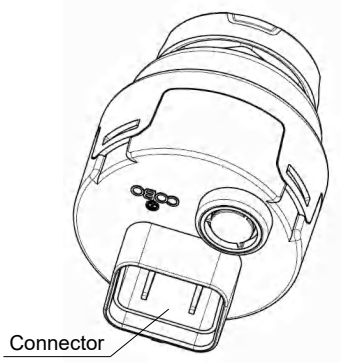

8. Start system configuration on the machine.

	INFORMATION NOTE
	System configuration depends on the specific installation on the vehicle. View Software programming and development [▶ 13].

6.2 Antenna-ext installation

6.2.1 Accessories

Use only the components supplied with the antenna:

- Antenna
- Gasket

Provide screws with these characteristics:

- n.4 M4
- Sufficient length considering the thickness of the mounting panel and 9mm length of the threaded insert

6.2.2 Procedure

- A model/characterisation on where to mount the device will be available. Contact COBO salesmen for further information.
- To determine the number of devices and the position on the vehicle contact COBO.
- Identify external antenna installation locations that maximize the system BLE signal coverage.
  - Prefer elevated mounting positions.
  - Orient the antenna to exploit the Y and Z radiation lobes for improved coverage.

	INFORMATION NOTE
	For information on external antenna radiation lobes, see the chapter “External Antenna Radiation Lobes” in the document “Keyless-System-ENG-QS”.

- If door unlocking is controlled by the Keyless-System, identify an external antenna installation position near the door or in a user-accessible area to allow NFC unlocking with the Keyfob.
- The panel must have a flatness of 0.4mm and maximum roughness of Ra3.2 in the mounting area to allow for an optimal seal.

Copyright Cobo Spa. All rights reserved. Contents subject to change without notice.

- Provide the application hole pattern shown in the figure.

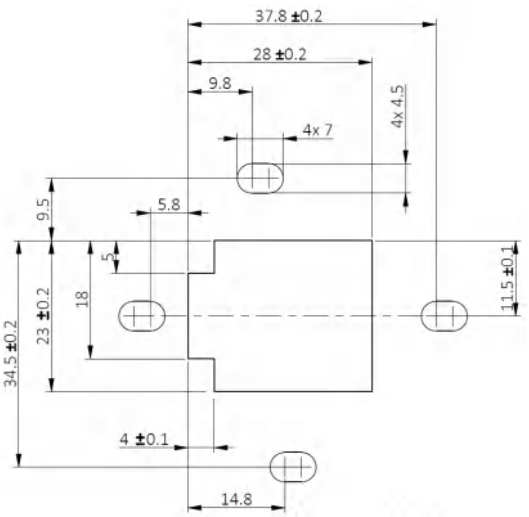

1. Insert gasket into the appropriate location.

2. Connect the polarised wiring to the connector shown in the figure.
3. Place the antenna on the surface.
4. Insert the 4 screws from below into the holes shown in the figure.

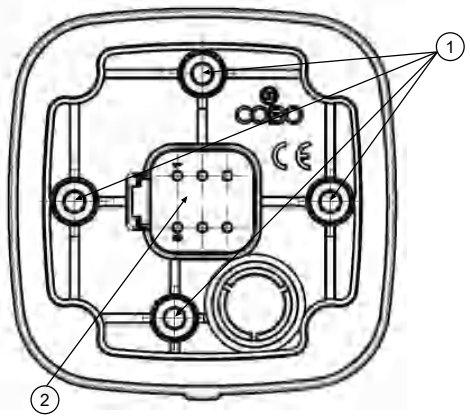

1	M4 threaded inserts 9 mm deep	2	Connector

5. Torque the screws (tightening torque: 4Nm).
6. Start system configuration on the machine.

Copyright Cobo Spa. All rights reserved. Contents subject to change without notice.

INFORMATION NOTE

System configuration depends on the specific installation on the vehicle. View Software programming and development [▶ 13].

7 TECHNICAL DATA

7.1 Ecu Keyless

Control system	
Microprocessor	Arm 32-bit Cortex-M33
Space for the available for the VT3 Software	192kB

Electrical characteristics	
Power supply voltage range	Operating: +6..+32VDC Cold Cranking 4.5VDC Device must be connected to power supply
Power supply current	Run Mode: <200mA @12V Sleep Mode: <5mA, @12V all wake-up sources active Run Mode: <200mA @24V Sleep Mode: <5mA, @24V all wake-up sources active
Total power output current max	1A on each DOH pin 4A on the total of the 4 DOH pins

Inputs and outputs		
Digital high side outputs	n. 4	Configurable as analogue/digital inputs 0V..32V
Digital/Analogue redundant inputs	n. 4	0V..+32V

Interfaces		
CAN-BUS line	n. 1	2.0B high speed, (11 or 29 bit identifier), ISO 11898-2 compliant
Bluetooth	n. 1	Version: 5.2 Frequency: 2400..2483MHz Maximum Power Output: 8dBm
NFC	n. 1	Type: NFC-V, ISO15693 compliant Frequency: 13.56MHz Magnetic field strength (H) <0.73A/m @ 10m

Mechanical and environmental characteristics	
Dimensions (DxH)	57x75mm (without connector)
Push button life	200000 Cycles
Clamping system	Plastic nut, M25
Panel sealing system	Gasket
Operating temperature	-40°C..+80°C, compliant to ISO IEC60068
Storage temperature	-40°C..+85°C, compliant to ISO IEC60068
Ecu Keyless protection grade	IP66, IP67, compliant to IEC 60529
Protection grade expected with proper installation	IP66, compliant to IEC 60529
Weight	97g

Other features		
Max number of associable keys	n. 16	

Copyright Cobo Spa. All rights reserved. Contents subject to change without notice.

Other features		
Max number of associable antennas	n. 4[7]	
Start/stop button	n. 1	Backlight button, configurable color via software
		Button stroke: 1.5mm
		Button activation force: 10.5N
Maximum BLE signal reception distance		15m in passive mode in open field
		15m in active mode in open field
NFC signal reception distance with Wallet		3cm
NFC signal reception distance with Keyfob		1cm
Digital/Analogue inputs		Configurable as wake up sources

Information about materials	
Case material	PA6 30%GF, POM, ABS
Sealing material	EPDM

7.2 Keyfob

Control system	
Microprocessor	Cortex M0

Electrical characteristics	
Battery	Replaceable battery CR2430, +3.3VDC

Interfaces		
Bluetooth	n. 1	Version: 5.2 Frequency: 2400..2483MHz Maximum Power Output: 8dBm
NFC	n. 1	Type: NFC-V, ISO15693 Frequency: 13.56MHz

Mechanical and environmental characteristics	
Dimensions (WxHxD)	79x43x17.5mm
Operating temperature	-20°C..+60°C, ISO IEC60068 compliant
Storage temperature	-30°C..+70°C (without battery), ISO IEC60068 compliant
KEYFOB Protection grade	IP64, IP67, compliant to IEC 60529
Weight	38g

Other features		
Max number of associable ECUs	n. 12	
Buttons	n. 3	Customizable ideogram
		Stroke for activation: 0.33mm
		Maximum stroke: 0.5mm
		Activation trigger force: 3.8N
		Push button life: 100000 cycles
Battery state		Viewed on display (only possible if configured by the customer via software)

Information about materials	
Key holder material	ZAMAK
Body material	ABS

[7] The multiple association of keyfobs, if 4 antennas are installed on the vehicle, may cause a pairing delay.

Copyright Cobo Spa. All rights reserved. Contents subject to change without notice.

7.3 Wallet

Electrical characteristics		
Power supply		Passive

Interfaces		
NFC	n. 1	NFC-V, 13.56MHz, ISO15693

Mechanical and environmental characteristics	
Dimensions (WxHxD)	50x46x9.7mm
Operating temperature	-40°C..+80°C, ISO IEC60068 compliant
Storage temperature	-40°C..+85°C, ISO IEC60068 compliant
Protection grade	IP64, IP67, compliant to IEC 60529
Weight	13g

Information about materials	
Body material	ABS

7.4 Antenna-ext

Control system	
Microprocessor	Arm 32-bit Cortex-M33

Electrical characteristics	
Power supply voltage range	Operating +6..+32VDC Cold Cranking 4.5VDC Device must be connected to power supply
Power supply current	Run Mode: <50mA @12V (no NFC) Sleep Mode: <5mA, @12 V Run Mode: <50mA @24V Sleep Mode: <5mA, @24V

Interfaces		
CAN-BUS line	n. 1	2.0B high speed, (11 or 29 bit identifier), ISO 11898-2 compliant
Bluetooth	n. 1	Version: 5.2 Frequency: 2400..2483MHz Maximum Power Output: 8dBm
NFC	n. 1	Type: NFC-V, ISO15693 compliant Frequency: 13.56MHz Magnetic field strength (H) <0.73A/m @ 10m

Mechanical and Environmental characteristics	
Dimensions (WxHxD)	70x70.5x30mm
Panel sealing system	Gasket
Operating temperature	-40°C..+85°C, compliant to ISO IEC60068
Storage temperature	-40°C..+85°C, compliant to ISO IEC60068
Antenna protection grade	IP66, IP67, IP69K, compliant to ISO 60529
Protection grade expected with proper installation	IP66, compliant to ISO 60529
Weight	85.6g

Other features	
Maximum BLE signal reception distance	15m in passive mode in open field
	15m in active mode in open field
NFC signal reception distance with Wallet	3cm

Copyright Cobo Spa. All rights reserved. Contents subject to change without notice.

Other features	
NFC signal reception distance with Keyfob	1cm

Information about materials	
Body material	ABS
Sealing material	EPDM

8 BATTERY REPLACEMENT

INFORMATION NOTE

The system reads and monitors the battery status.
Low battery warning must be implemented using the VT3 Visual Tool.

8.1 Accessories

The product is equipped with a battery: In case of low battery, buy a new battery (CR2430).

8.2 Procedure

1. Remove the battery cover by pressing into the slot with a slotted screwdriver (0.4x2.4mm tip), without removing the red gasket
2. Lift the battery cover
3. Replace the CR2430 battery, taking care not to remove the red gasket
4. Relocate the battery cover

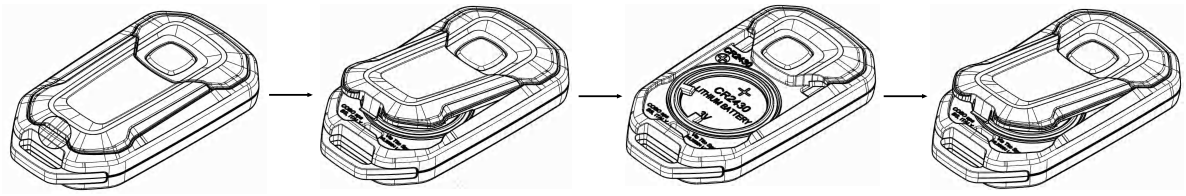

9 KEYFOB RECOGNITION WITH LOW BATTERY

If the Keyless Keyfob battery is depleted, BLE identification is not possible and related functions (e.g., vehicle unlock and start) cannot be authorized.

NOTICE

Risk of system malfunction if NFC is not enabled via the VT3 Visual Tool library function

1) Implement NFC management function in the application software using the specific VT3 Visual Tool library function vt3_customer_app

INFORMATION NOTE

For further information, see the relevant chapter in the “Library” section in the document “Keyless-system specific supplement”

Copyright Cobo Spa. All rights reserved. Contents subject to change without notice.

Keyfob recognition via external antenna (for vehicle access — if supported)

	INFORMATION NOTE
	Follow this procedure only if vehicle door unlocking is controlled by the Keyless system (function implemented via VT3 visual tool).

1. Place the button side of the Keyfob associated with the vehicle close to the top side of the external antenna

2. Wait 2s seconds. The external antenna detects the Keyfob via NFC and sends a CAN message to the ECU. The ECU forwards the event to the application, where the related actions (e.g., door unlock) can be implemented using the VT3 Visual Tool..

   If the key is not detected, remove the key and repeat the operation.

Keyfob recognition via ECU for vehicle start up

	INFORMATION NOTE
	Follow this procedure only if vehicle start is controlled by the Keyless system (function implemented via VT3 Visual Tool).

3. Place the button side of the Keyfob associated with the vehicle close to the ECU pushbutton.

4. Wait 2s seconds. The ECU detects the Keyfob via NFC and forwards the event to the application, where the related actions (e.g., vehicle start up) can be implemented using the VT3 Visual Tool.

   If the key is not detected, remove the key and repeat the operation.
5. Start the vehicle ~~within xx seconds~~ before the ECU loses the association.

   The association time depends on a timer that must be implemented using the VT3 Visual Tool.

Copyright Cobo Spa. All rights reserved. Contents subject to change without notice.

10 MAINTENANCE AND DISPOSAL

10.1 Maintenance

This device is maintenance-free.

10.2 Repairing

In the event of a malfunction, take the reference contacts indicated in the supply contract and activate the complaints handling procedure by sending an e-mail.

10.3 Disposal

Dispose of the device in accordance with current regulations: The device must not be disposed of in the municipal waste collection, but must be handled as special waste.

COBO spa actively manages/transmits the information required for end-of-life management and assesses the compliance of its products in relation to the requirements of:

- Regulation (EC) No 1907/2006 REACH and SCIP notification required by the Directive 2008/98/EC “Waste Framework Directive”, Article 9(1)(i), as amended by Dir. 2018/851/EU
- Regulation (EU) 2019/1021 (POPs)
- Directive 2000/53/EC (ELV), where applicable
- Regulation (EU) 2023/1542 and, until its complete repeal, Directive 2006/66/EC (for the parts not conflicting with the Regulation), where applicable

This product contains one or more batteries, which must be handled according to Regulation (EU) 2023/1542 and, until its complete abrogation, according to Directive 2006/66/EC, for those parts not conflicting with the Regulation.

10.4 Product Environmental Compliance

COBO Spa is committed to ensuring the compliance of its products with mandatory regulations, with particular reference to European ones.

To this end, COBO Spa does not systematically perform chemical analyses on its products, but requires evidence of conformity from all suppliers and undertakes to assess their reliability and correctness to the best of its knowledge.

For more information, contact **compliance@it.cobogroup.net** .

Copyright Cobo Spa. All rights reserved. Contents subject to change without notice.

C.O.B.O. SpA
Via Tito Speri 10,
Leno, 25024 (BS)
Tel: +39 030 90451
Fax: +39 030 9045330
info@cobogroup.net
www.cobogroup.net