Zora P1 DEVELOPMENT BOARD

Zora P1 V1.0

電波法により5GHz帯は屋内使用に限ります

目录

Orbbec Pi 2（A311D）Development board help document.....1
1. Orbbec Pi P2（A311D-4G-01 ）Introduction of Development Board Interface..... 3
1.1 Front picture of development board..... 3
1.2 Back picture of development board..... 3
1.3 Introduction to hardware interface..... 3
1.4 42Pin GPIO introduction (form 01 to 42).....5
1.5 Uart introduction（from 01 to 04）..... 5
1.6 PMD introduction（from 01 to 04）..... 5
1.7 RTC introduction.....5
2. Preparation for firmware burning.....7
2.1 Long press “update” button enter burn mode..... 7
2.2 Use hardware interface uart-debug enter burning mode:.....9
2.3 Use ADB tool to enter burning mode.....10
3. Detailed method and operation steps of disassembling and burning firmware..... 11
3.1 Configuration requirements for computers：..... 11
3.2 Using the update button to burn the firmware..... 11
3.4 Use hardware interface uart-debug enter burning mode..... 16
3.5 Burn firmware with ADB tool..... 17
3.6 Burn the firmware to multiple development boards at the same time..... 19
3.7 Download burning tools.....19
5. Set ADB debugging..... 20
6. EMMC extension module instructions..... 20
7. POE Module introduction.....21
8. NPU help..... 23
9. Hardware data of development board..... 24
10. Firmware Download.....26
11. Accessories around development board.....27

1. Zora P1（A311D-4G-01 ）Introduction of Development Board Interface

1.1 Front picture of development board

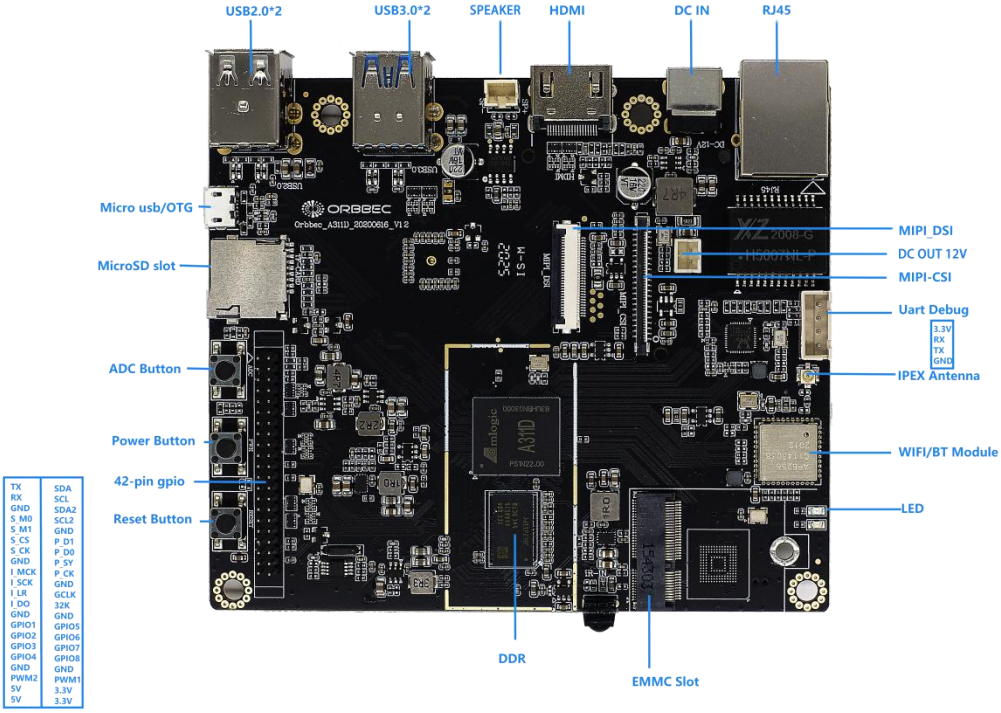

TX	SDA
RX	SCL
GND	SDA2
S_M0	SCL2
S_M1	GND
S_CS	P_D1
S_CK	P_D0
GND	P_SY
I_MCK	P_CK
I_SCK	GND
I_LR	GCLK
I_DO	32K
GND	GND
GPIO1	GPIO5
GPIO2	GPIO6
GPIO3	GPIO7
GPIO4	GPIO8
GND	GND
PWM2	PWM1
5V	3.3V
5V	3.3V

1.2 Back picture of development board

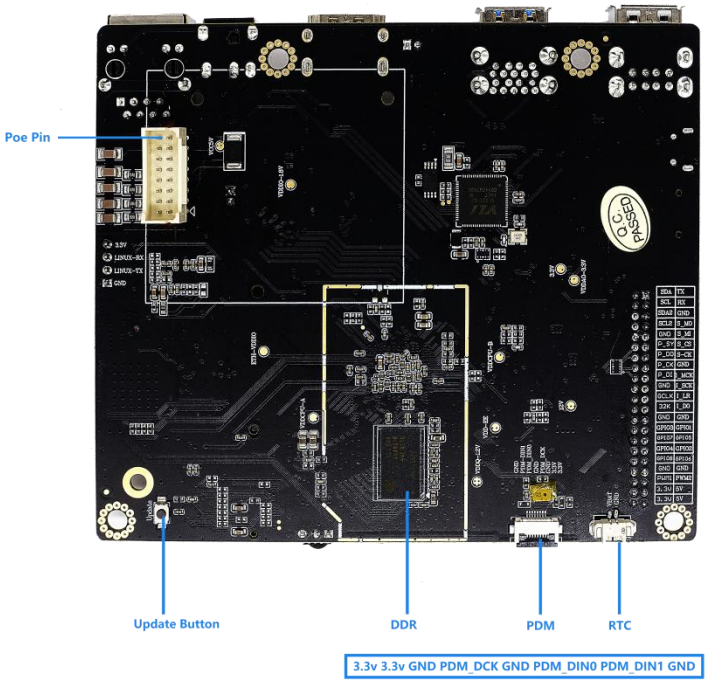

1.3 Introduction to hardware interface

processor	Amlogic, Quad A73+ Dual A53

RAM	2GB DDR4*2
storage	32GB EMMC
EMMC extension	Pluggable EMMC module(8GB,16GB,32GB)
Storage-Micro SD	Up to 128Gb
MIPI-CSI	1 CSI + 8M HDR ISP
MIPI-DSI	Support
USB	2xUSB 3.0 + 2xUSB 2.0 + 1USB XHCI OTG 2.0
HDMI	HDMI 2.1
Wifi/BT	WIFI 2.4/5G 802.11a/b/g/n/ac, 2x2 MIMO， BT5.0 10m
Ethernet	RJ45 GigE Vision
POE	Pin + Extra Cap
Microphone	On-board
PDM	PDM interface microphone
Debug	Micro USB
Buttons	Power ,Reset,ADC ,Update and act
	OPEX Wifi
LED	Power status indicator
42Pin GPIO	Detail in 42Pin GPIO introduction
UART	1
I2C	2
SPI	2
I2S	1
PWM	2
ADC	1
DC-OUT	1x5V+1x3.3V
GPIO	8
Ground	8
PMU	YK613
DC-IN	12V 2.1mm
OS	Android 9， Ubuntu 18.04， Linux 4.9
Replace firmware	By replacing the EMMC module
Upgrade mode	USB update，

1.4 42Pin GPIO introduction (form 01 to 42)

TX（01）	SDA
RX	SCL
GND	SDA2
S_M0	SCL2
S_M1	GND
S_CS	P_D1
S_CK	P_D0
GND	P_SY
I_MCK	P_CK
I_SCK	GND
I_LR	GCLK
I_DO	32K
GND	GND
GPIO1	GPIO5
GPIO2	GPIO6
GPIO3	GPIO7
GPIO4	GPIO8
GND	GND
PWM2	PWM1
5V	3.3V
5V	3.3V（42）

1.5 Uart introduction（from 01 to 04）

3.3V（01）
RX
TX
GND（04）

1.6 PMD introduction（from 01 to 04）

3.3v（01）	3.3v	GND	PDM_DCK	GND	PDM_DIN0	PDM_DIN1	GND（07）

1.7 RTC introduction

GND（01）	VBAT（02）

1.8 Product size description

116*100mm

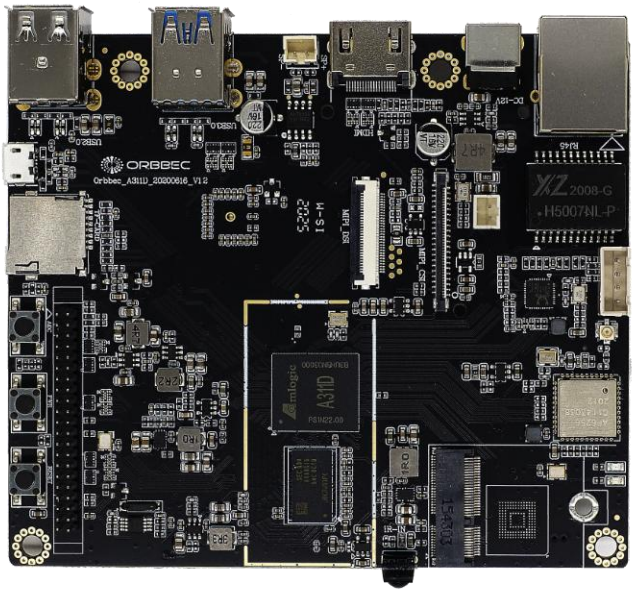

2. Preparation for firmware burning

There are three ways to enter burn mode:

2.1 Long press “update” button enter burn mode

a . Long press update button

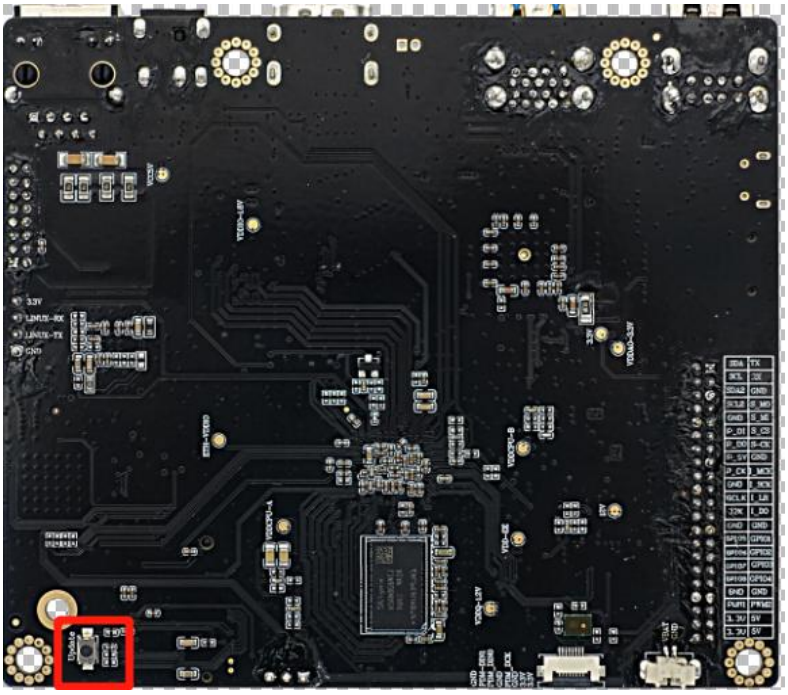

b.Connect the OTG interface of development board through windows(win 10 or win7) system computer

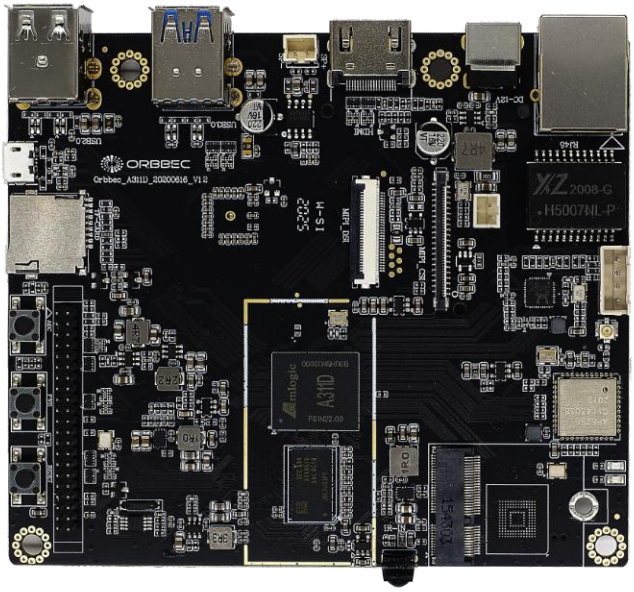

c.Link power 12V-2A adapter through DC-in interface

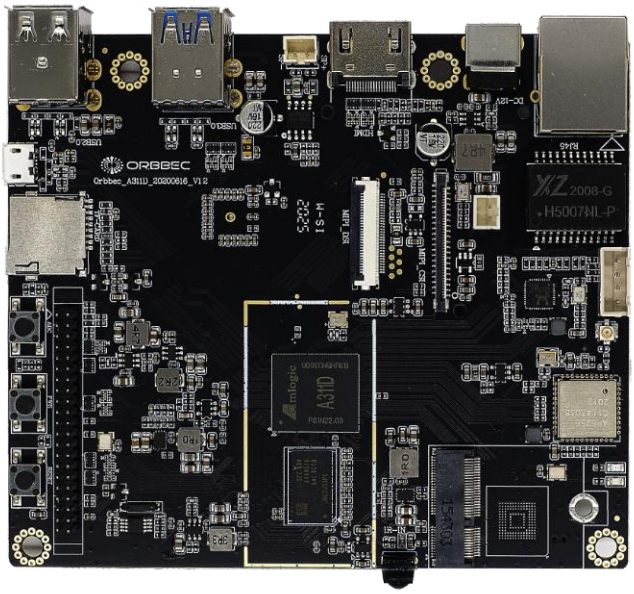

d.Successfully linked the burning software。

2.2 Use hardware interface uart-debug enter burning mode:

a. Using USB to UART serial port tool connect the UART-debug interface

b. Through serial protocol tool software ,type in “reboot”

c. When the development board is restarted， Press enter continuously and ente uboot mode

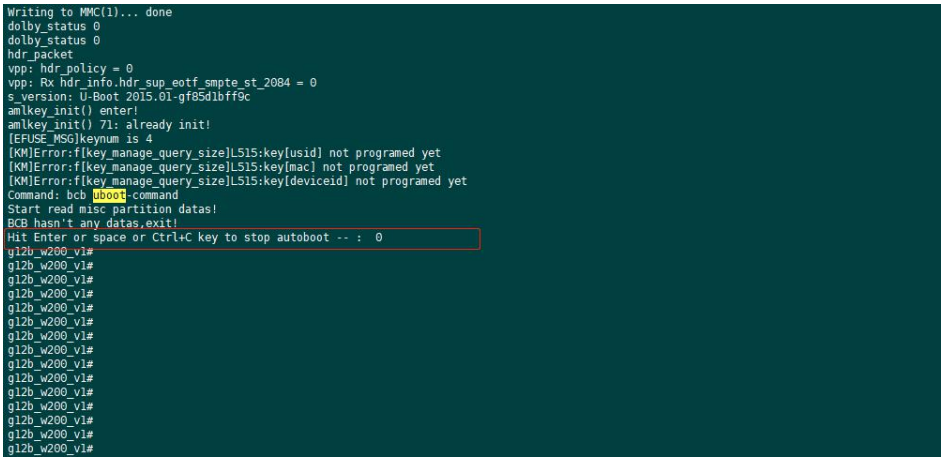

d.type in “update”

e. Successfully linked the burning software

2.3 Use ADB tool to enter burning mode

a. Power on the development board by connecting the power adapter
b. Open the computer CMD console
c. Connecting computer and development board with the otg interface
d.CMD console type in “adb reboot update “

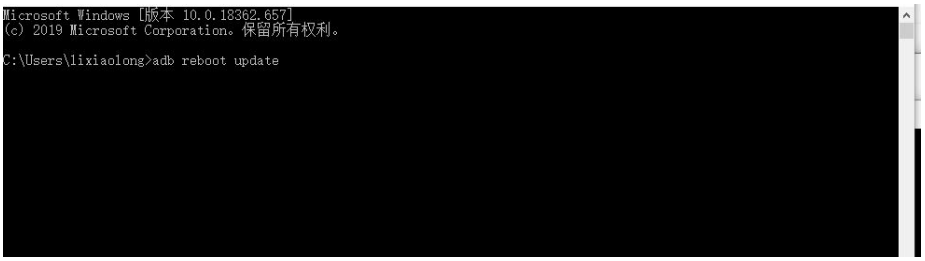

e. Successfully linked the burning software

3. Detailed method and operation steps of disassembling and burning firmware

3.1 Configuration requirements for computers：

a. Windows 7 or windows 10 operating system
b．Turn off antivirus software
c．has a high-speed USB 2.0 or USB 3.0 interface

3.2 Using the update button to burn the firmware

a．Long press the update button development board
b．Using micro USB cable to connect OTG hardware interface
c．Open the software “USB burning 2.2. X”

c.1 software interface(English)

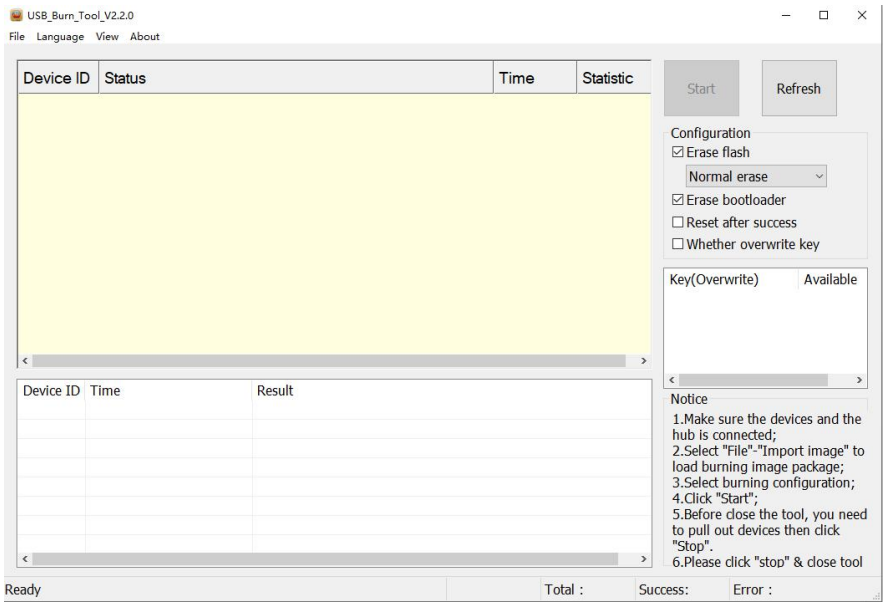

d. Supply power to development board through power supply adaptation

e. Burning tool successfully connected to development board

e.2 Software interface（English）

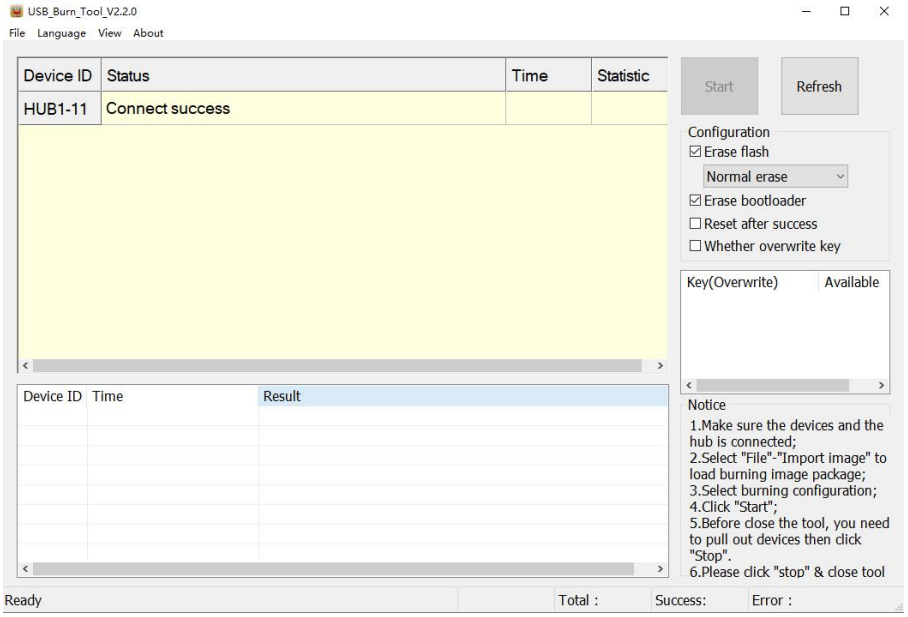

f. Import firmware（x.img）

f.2 Software interface（English）

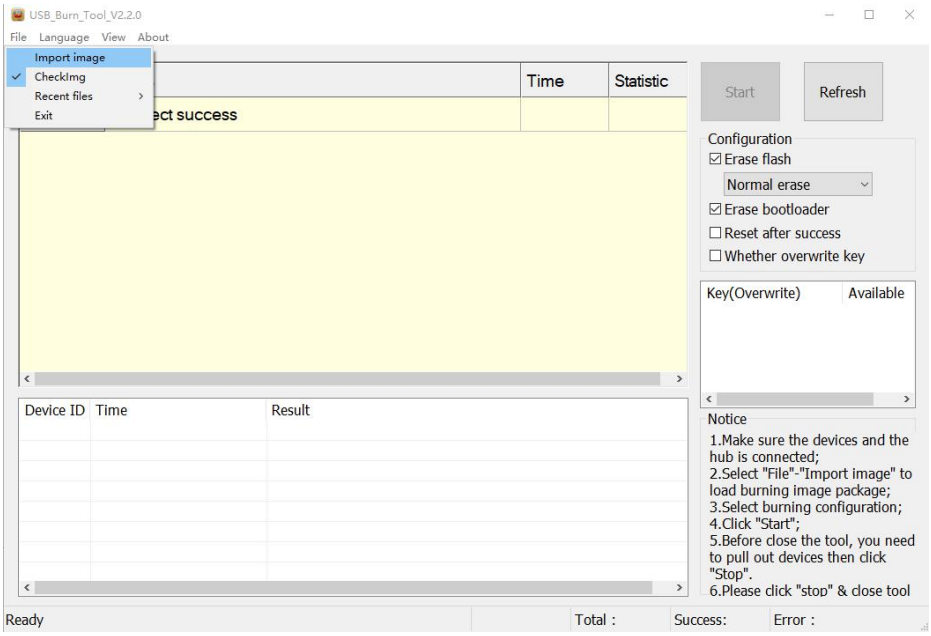

g. Click the start button，enter burning state

g.2 Software interface（English）

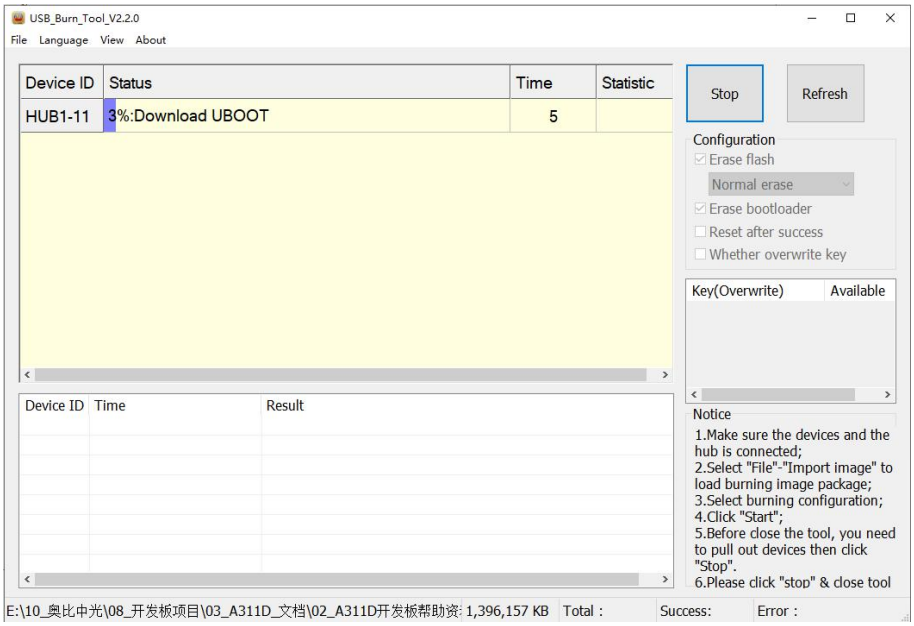

h. Complete firmware burning

h.2 software interface （English）

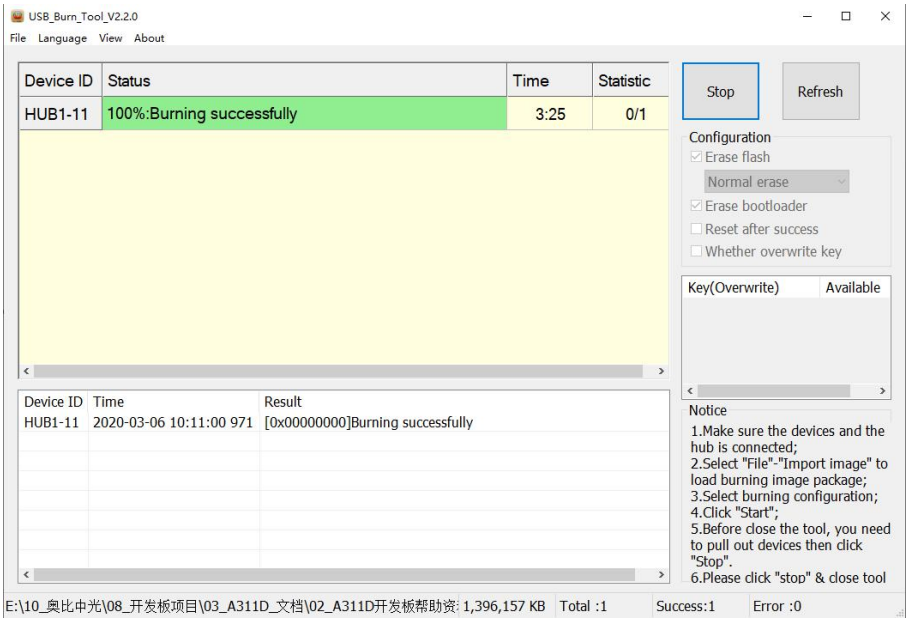

i.Clike the stop button then close the software

3.4 Use hardware interface uart-debug enter burning mode

a. Using USB to UART serial port tool connect the UART-debug interface

b. Through serial protocol tool software ,type in “reboot”

c. When the development board is restarted， Press enter continuously and ente uboot mode

d.Type in “update”

e. Burning tool successfully connected to development board

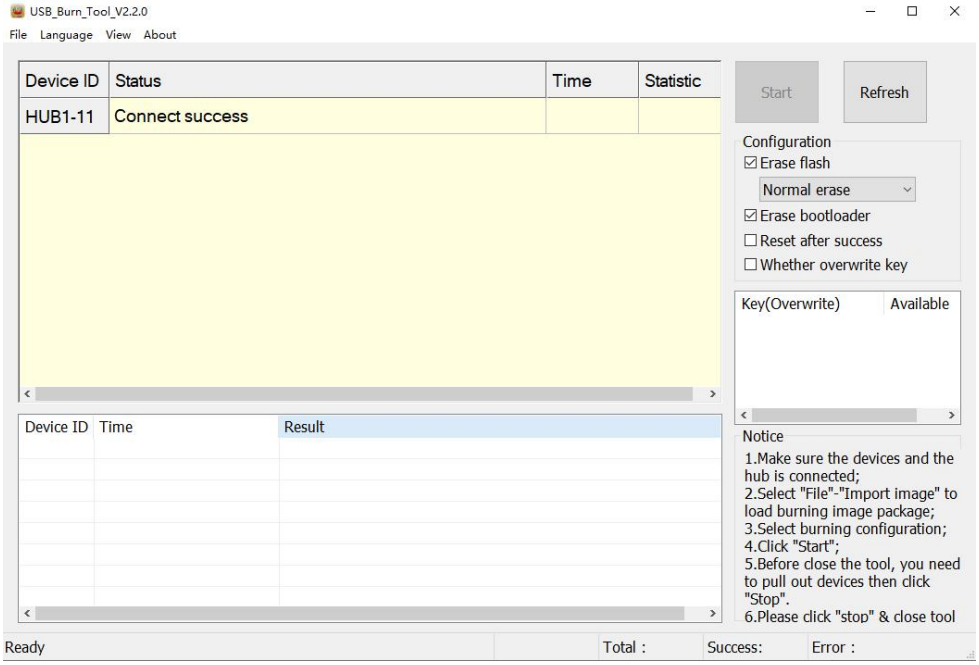

f.import the firmware

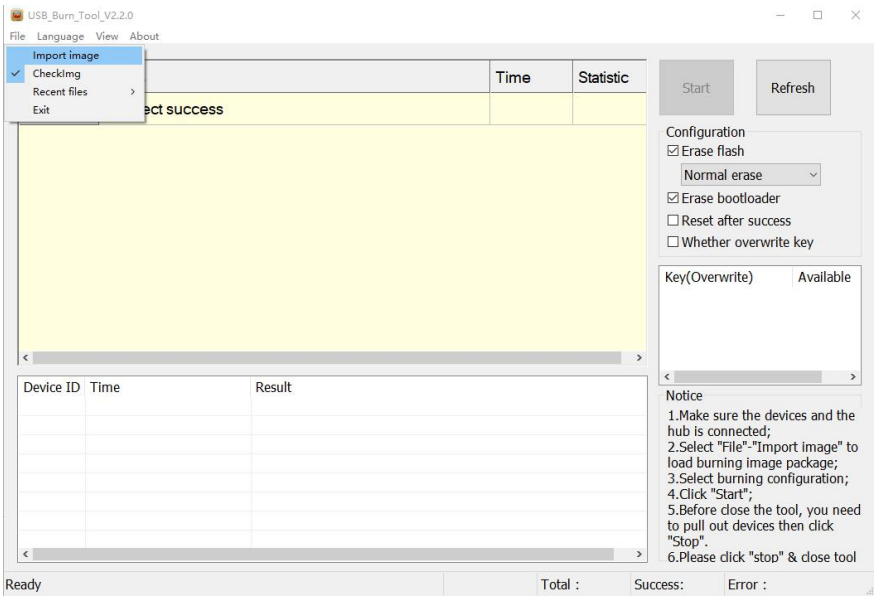

g.click the Start button, then waiting for burning

h. Complete firmware burning

i.Click the stop button ， close the tools

3.5 Burn firmware with ADB tool

a. Power on the development board by connecting the power adapter

b. Open the computer CMD console

c. Connecting computer and development board with the otg interface

d. CMD console type in “adb reboot update “

e. Successfully linked the burning software

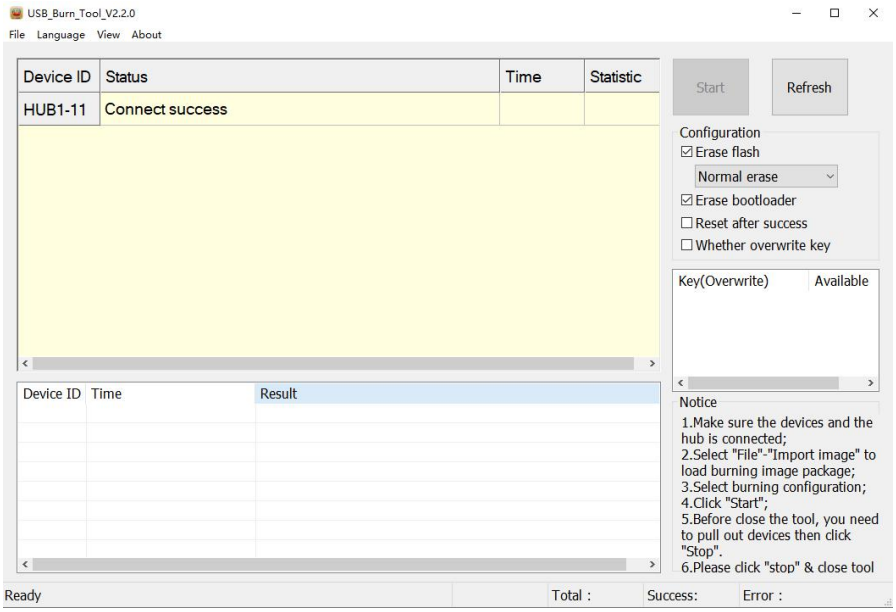

f.Import the burning firmware

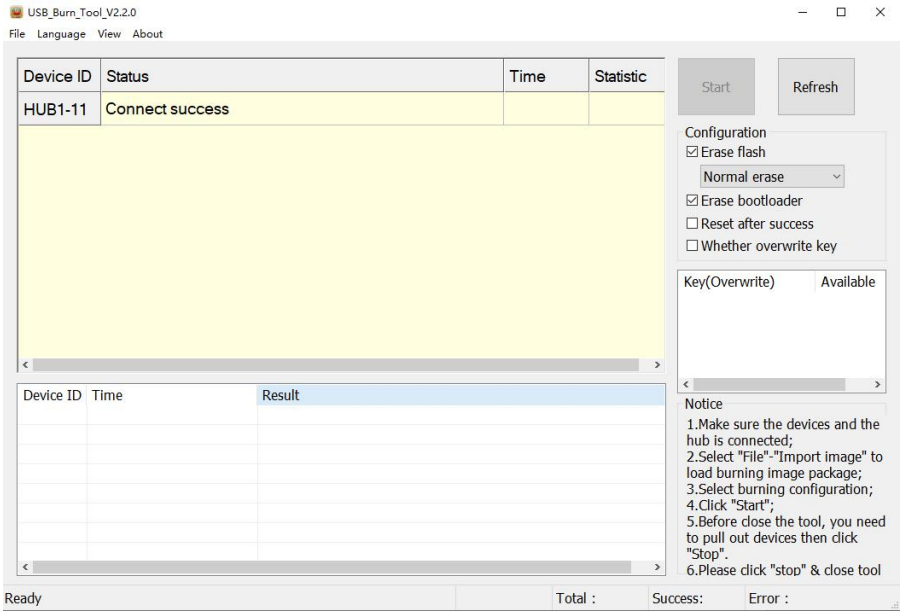

g.Click the start button， then waiting for burning

h.Buring the firmware successful

i.Click the stop button and close the Burning tools

3.6 Burn the firmware to multiple development boards at the same time

1. Using USB hub with power supply
2. Use the same operation as step 3.2
3. Support two or more development boards to be burned at the same time

3.7 Download burning tools

setup_v2.2.0.rar

5. Set ADB debugging

5.1 Android operating system on

a. The development board supports ADB debugging by default， Connect directly through OTG interface。Before connect otg ， make sure the computer has an ADB driver installed。

b. Open terminal window and type in adb shell

```
C:\Users\lixiaolong>adb shell
* daemon not running. starting it now on port 5037 *
* daemon started successfully *
galilei:/ $

galilei:/ $ ls
ls
ls: ./boot: Permission denied
ls: ./init: Permission denied
acct        default.prop              init.zygote32.rc sbin
bin         dev                       lost+found       sdcard
bugreports  etc                       metadata         storage
cache       init.environ.rc           mnt              sys
charger     init.rc                   odm              system
config      init.recovery.amlogic.rc  oem              ueventd.rc
d           init.usb.configfs.rc      proc             vendor
data        init.usb.rc               product
1|galilei:/ $
```

6. EMMC extension module instructions

6.1 EMMC EMMC pluggable expansion module， Capacity of hard disk is 8GB（Customizable capacity 16GB，32GB，64GB）

6.2 EMMC module Dimension drawing

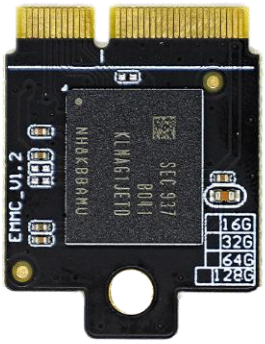

6.3 Picture of the EMMC module installed，Fixed by copper post

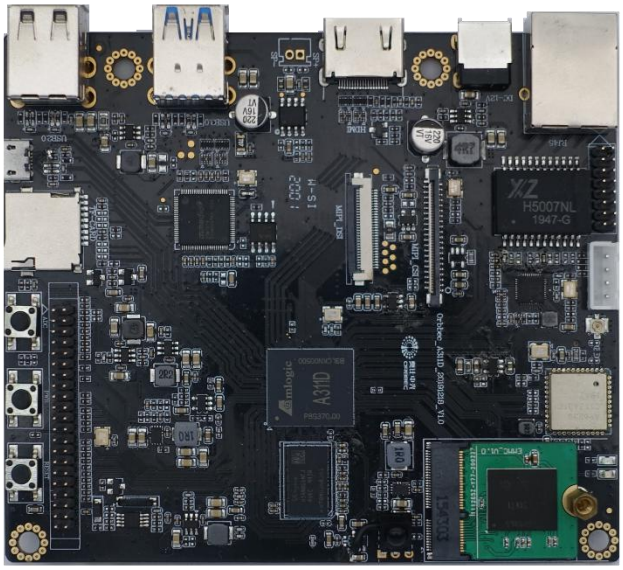

7. POE Module introduction

7.1 POE Module，support IEEE 802.3at standard，and compatible IEEE 802.3at standard

7.2 POE module Dimension drawing

7.3 Instructions for use POE module

a. Using DuPont line to connect development board and Poe board， Keep the corresponding relationship between pin feet of two boards。

b. Choose a Poe enabled switch or router 。Important matters：In order to ensure the normal operation of the equipment connected to the development board and the normal GPIO voltage output，normal network bandwidth，Please select a router or switch that supports both gigabit network card and ieee802.3at standard 。

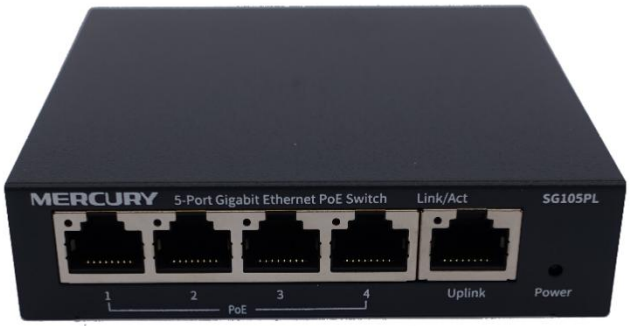

c. Connect Poe module through LAN port of switch or router。Just use the ordinary Ethernet cable

d. It can work normally when the development board is not connected to the power and network，You can get the network address and access the LAN or Ethernet

```
w400:/ $ ifconfig
ifconfig
eth0      Link encap:UNSPEC    Driver meson6-dwmac
          inet addr:10.10.6.46  Bcast:10.10.7.255  Mask:255.255.254.0
          inet6 addr: fe80::7d1e:fe24:249b:8f98/64 Scope: Link
          UP BROADCAST RUNNING MULTICAST  MTU:1500  Metric:1
          RX packets:33778 errors:0 dropped:0 overruns:0 frame:0
          TX packets:1026 errors:0 dropped:0 overruns:0 carrier:0
          collisions:0 txqueuelen:1000
          RX bytes:3069942 TX bytes:82126

lo        Link encap:UNSPEC
          inet addr:127.0.0.1  Mask:255.0.0.0
          inet6 addr: ::1/128 Scope: Host
          UP LOOPBACK RUNNING  MTU:65536  Metric:1
          RX packets:43 errors:0 dropped:0 overruns:0 frame:0
          TX packets:43 errors:0 dropped:0 overruns:0 carrier:0
          collisions:0 txqueuelen:1
          RX bytes:6011 TX bytes:6011
```

8. NPU help

8.1 Content to be added

FCC Warning

This device complies with part 15 of the FCC rules. Operation is subject to the following two conditions: (1) this device may not cause harmful interference, and (2) this device must accept any inte rference received, including interference that may cause undesired operation.

Changes or modifications not expressly approved by the party responsible for compliance could void the user's authority to operate the equipment.

NOTE: This equipment has been tested and found to comply with the limits for a Class B digital device, pursuant to part 15 of the FCC Rules. These limits are designed to provide reasonable protection against harmful interference in a residential installation. This equipment generates uses and can radiate radio frequency energy and, if not installed and used in accordance with the instructions, may cause harmful interference to radio communications. However, there is no guarantee that interference will not occur in a particular installation. If this equipment does cause harmful interferenceto radio or television reception, which can be determined by turning the equipment off and on, the user is encouraged to try to correct the interference by one or more of the following measures:

-Reorient or relocate the receiving antenna.

•Increase the separation between the equipment and receiver.

•Connect the equipment into an outlet on a circuit different from that to which the receiver is connected.

•Consult the dealer or an experienced radio/TV technician for help.

Radiation Exposure Statement

This equipment complies with FCC radiation exposure limits set forth for an uncontrolled environment. This equipment should be installed and operated with minimum distance 20cm between the radiator and your body.

9. Hardware data of development board

9.1 Schematic diagram

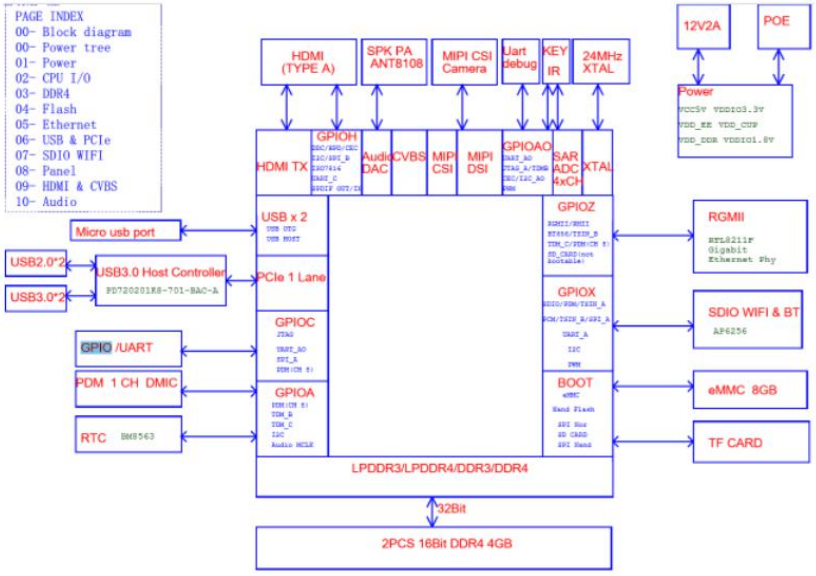

9.2 Hardware design drawing

a. Front of plate and frame drawing:

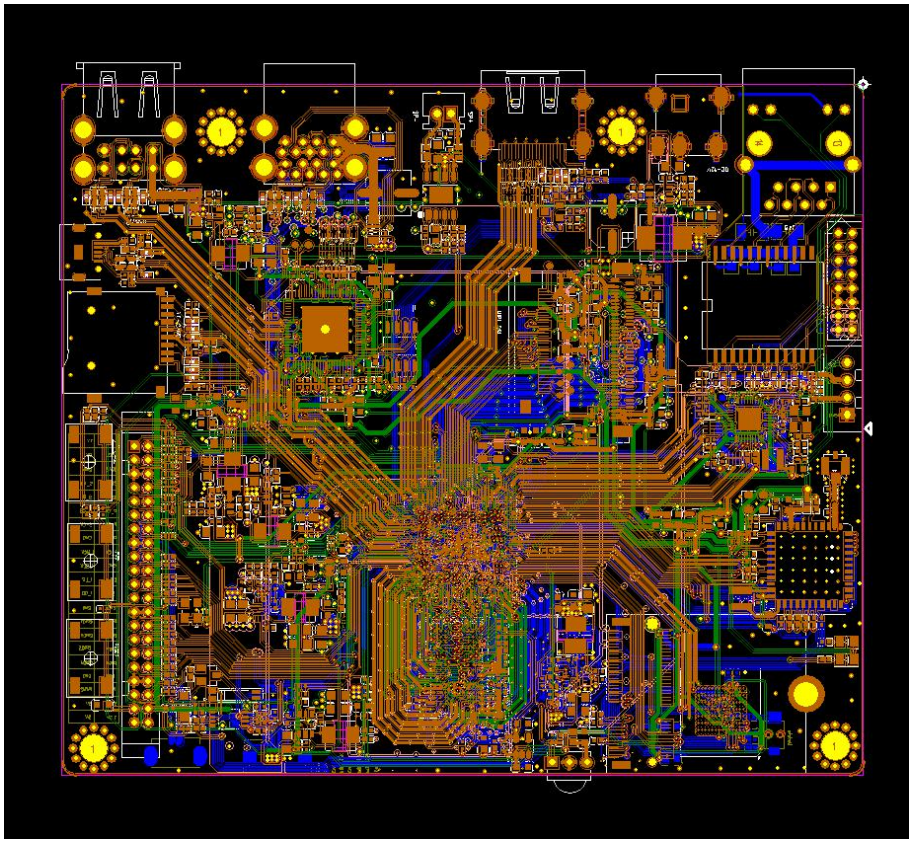

b.bakc of plate and frame drawing:

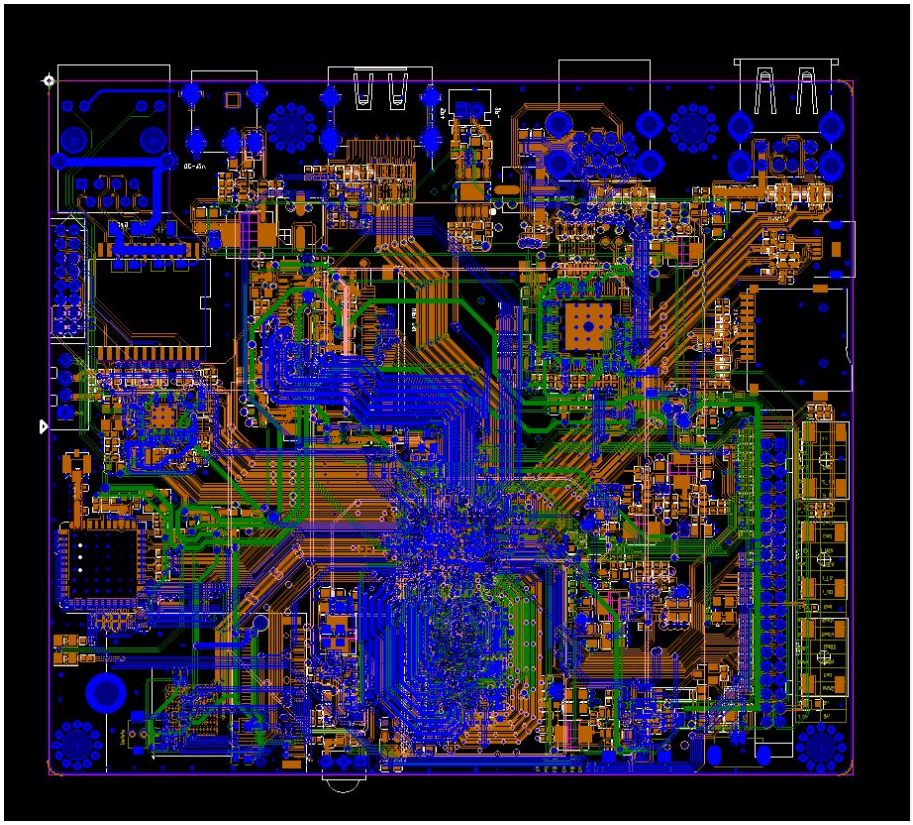

9.3 Chipset datasheet

A311D Datasheet (05).pdf

10. Firmware Download

10.1 Android firmware

a.orbbec_pi_p2_android_v1.0_20200306.img (md5)

10.2 Ubuntu firmware

a. orbbec_pi_p2_ubuntu_18.04_v1.0_20200306.img (md5)

11. Accessories around development board

11.1 Development board case

11.1.1 list of parts

NO.	Name	Quantity
①	top board	*1
②	floor	*1
③	lift board	*1
④	right board	*1
⑤	front board	*1
⑥	back board	*1
⑦	SOO	*4
⑧	eMMC rivet	*1
⑨	case screw	*4
⑩	case nut	*4

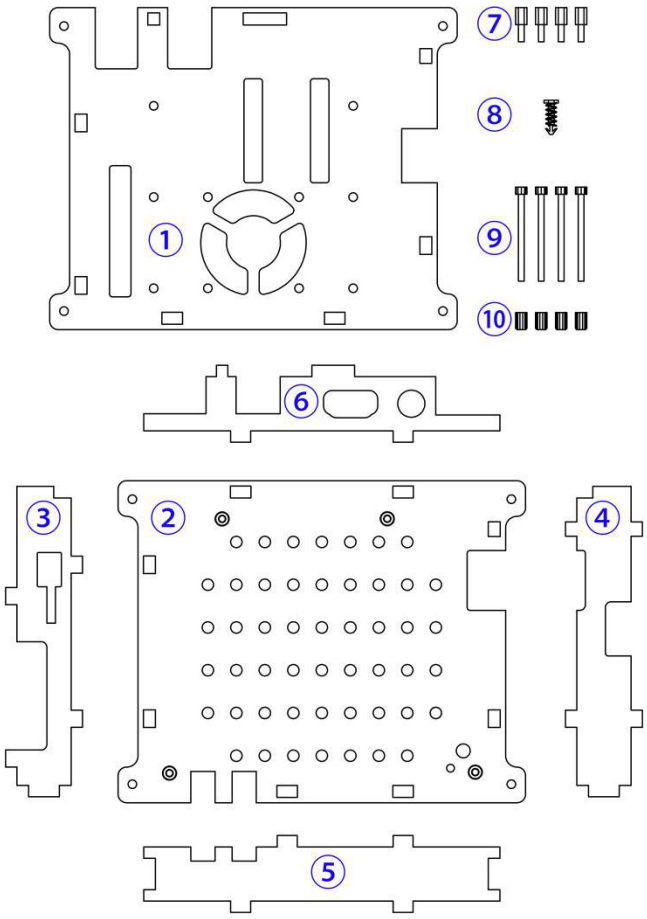

11.1.2 Installation procedure

Step	Diagrams	State
1	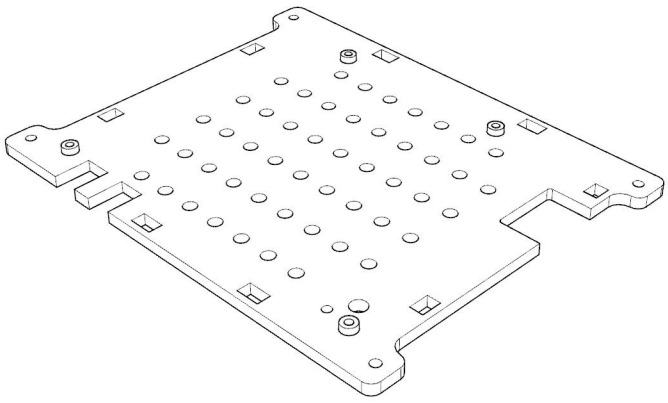	Put the floor ② and place it on the plane in the direction shown in the diagram.

2	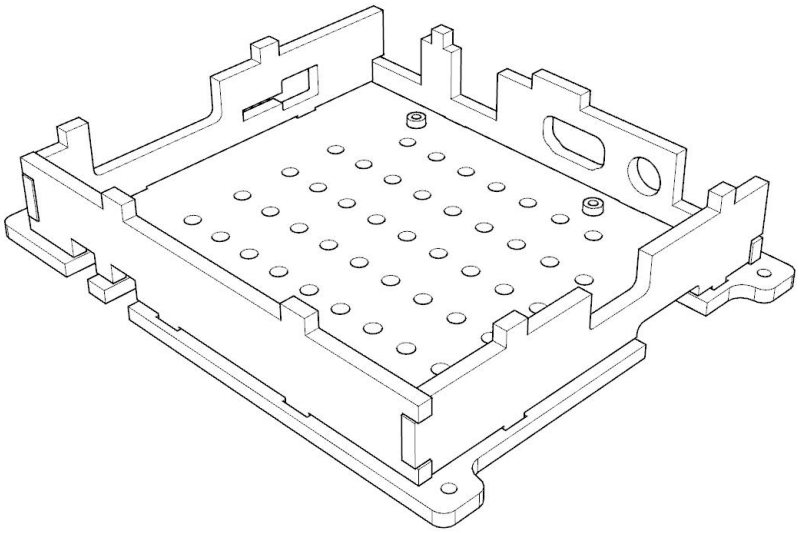	Insert the four side boards③④⑤⑥ into the floor in the direction as shown in the diagram (the inserting mechanism between the plates is interference fit, and it is normal to install the plates loosely in this step).
3	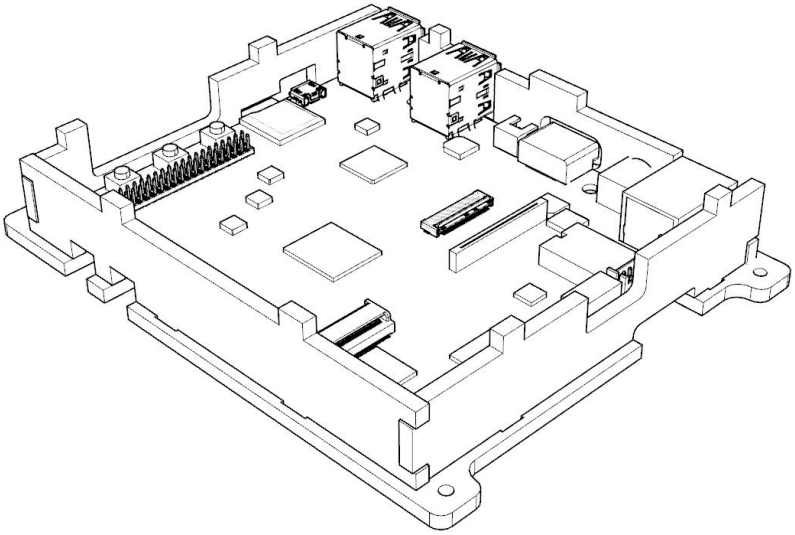	Place the development board into the shell as shown.

4	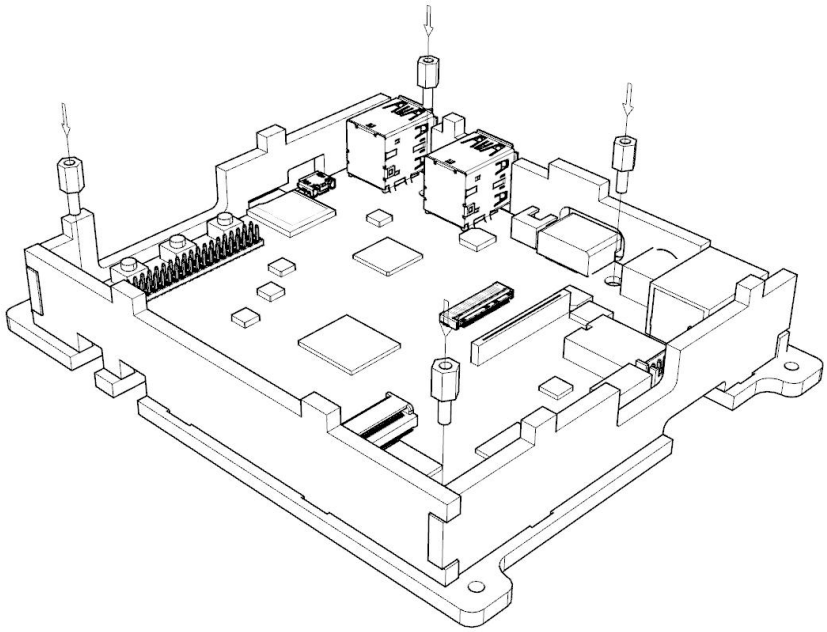	Put four SOO⑦ pass through the positioning holes of the development plates according to the position indicated by the arrow line, and then screw into the four nuts fixed on the bottom plate and tighten them.
5	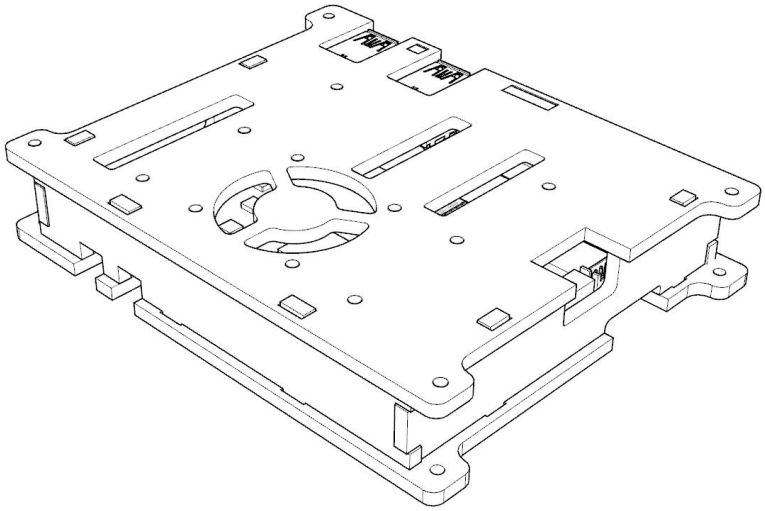	Install the top board① in the direction shown in the diagram.

6	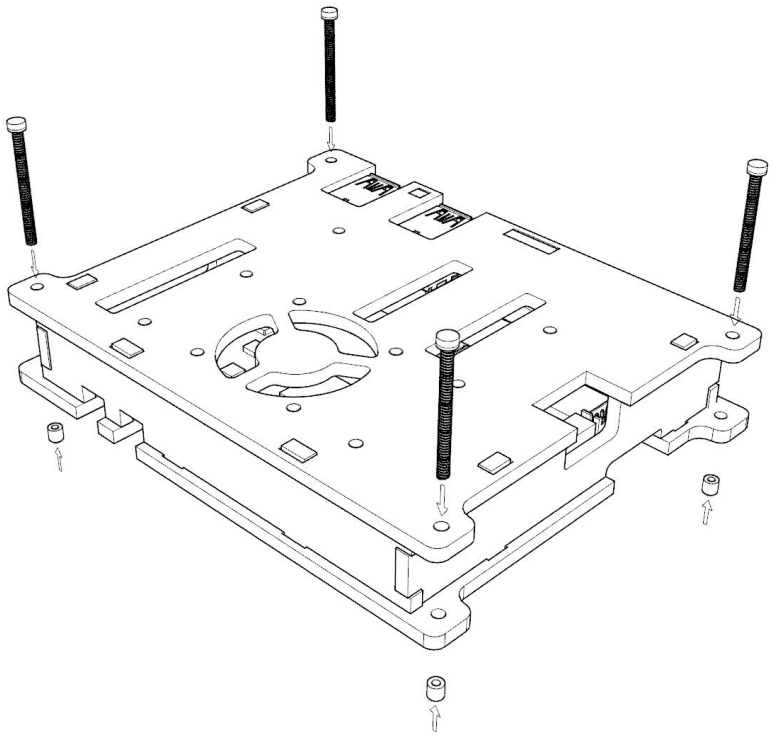	Pass the four case screw ⑨ through the upper and lower plates of the housing according to the position and direction shown in the figure; Screw the four case nuts ⑩ into the corresponding screws respectively according to the position and direction shown in the figure and tighten them.
7	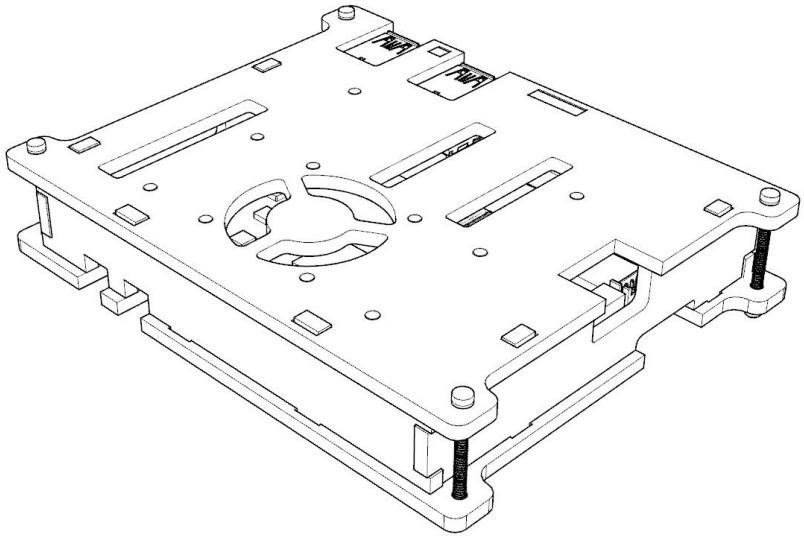	Finish.

11.1.3 Other description

If you need to install and deploy other development board accessories or peripherals on the housing (such as the eMMC memory card fan for the Obi MID-Light 3D camera, etc.), please refer to the installation instructions for the corresponding accessories.

11.2 The power adapter

11.3 RTC

11.4 Touch module and LCD display

11.5 Microphone array（Far field pickup algorithm， Noise reduction algorithm and act）