LZ-WA10

Quick Start Guide

① Function introduction

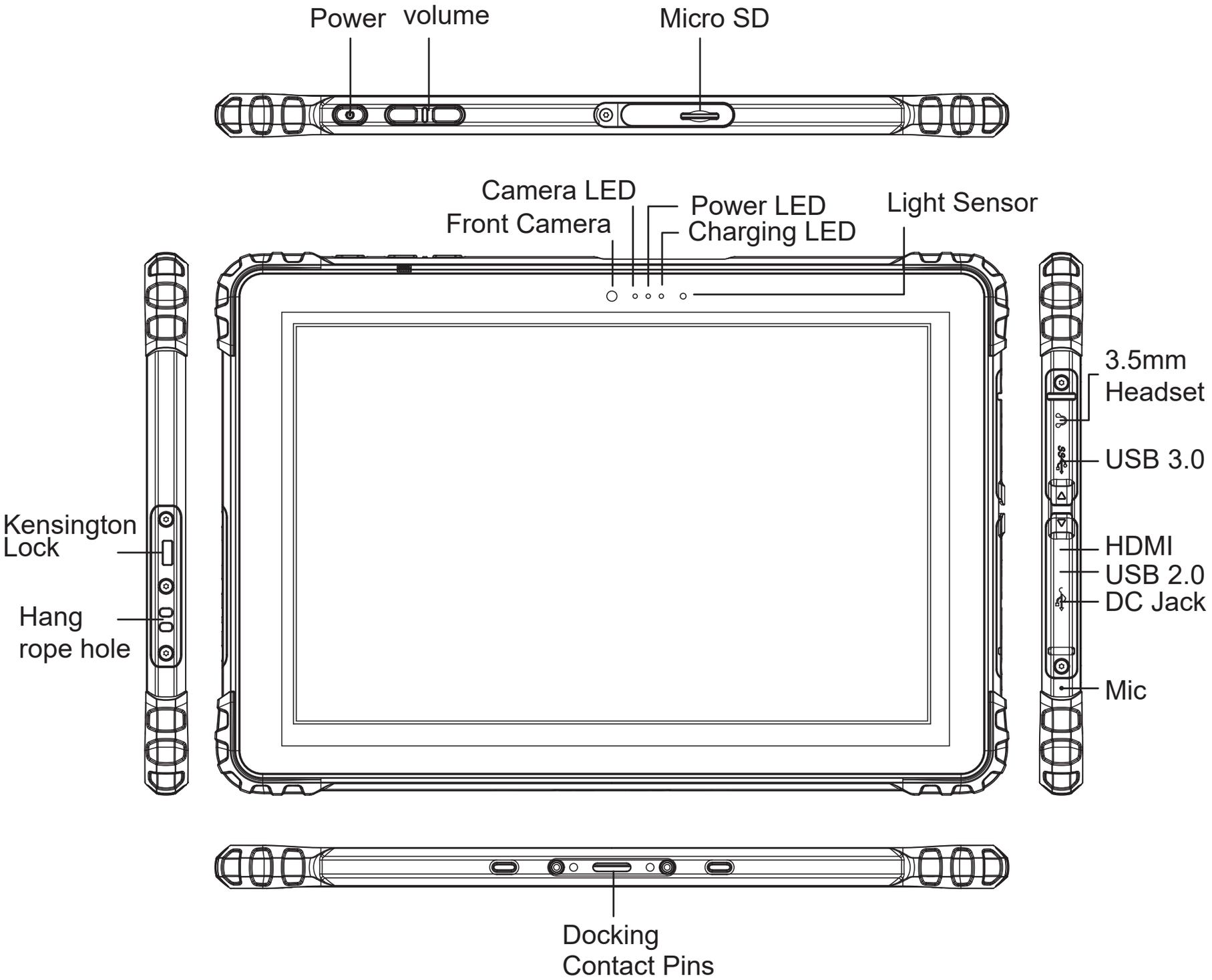

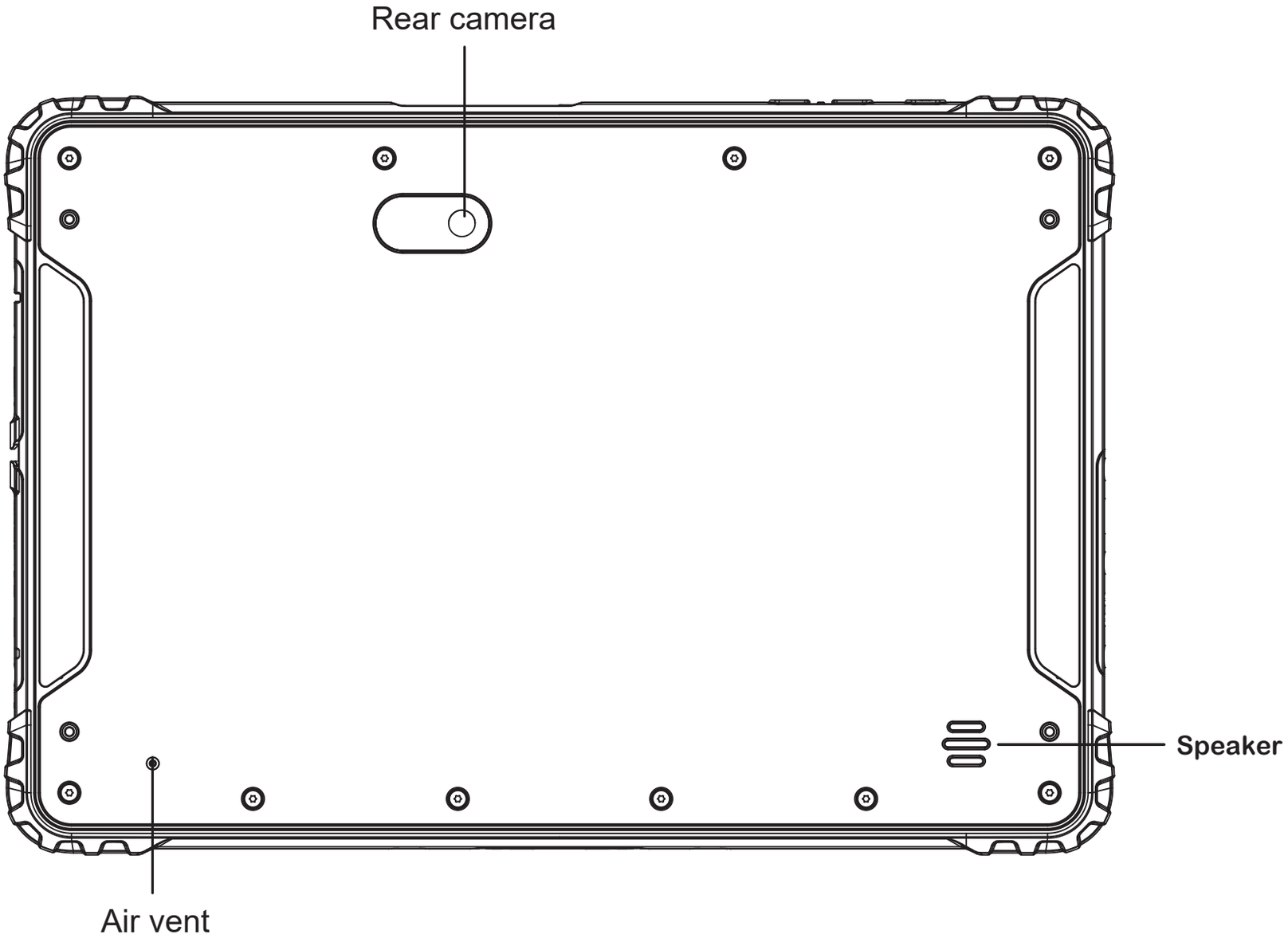
Rear camera
Speaker
Air vent

② INSERT/REMOVE SD

Install or remove SD card as shown below

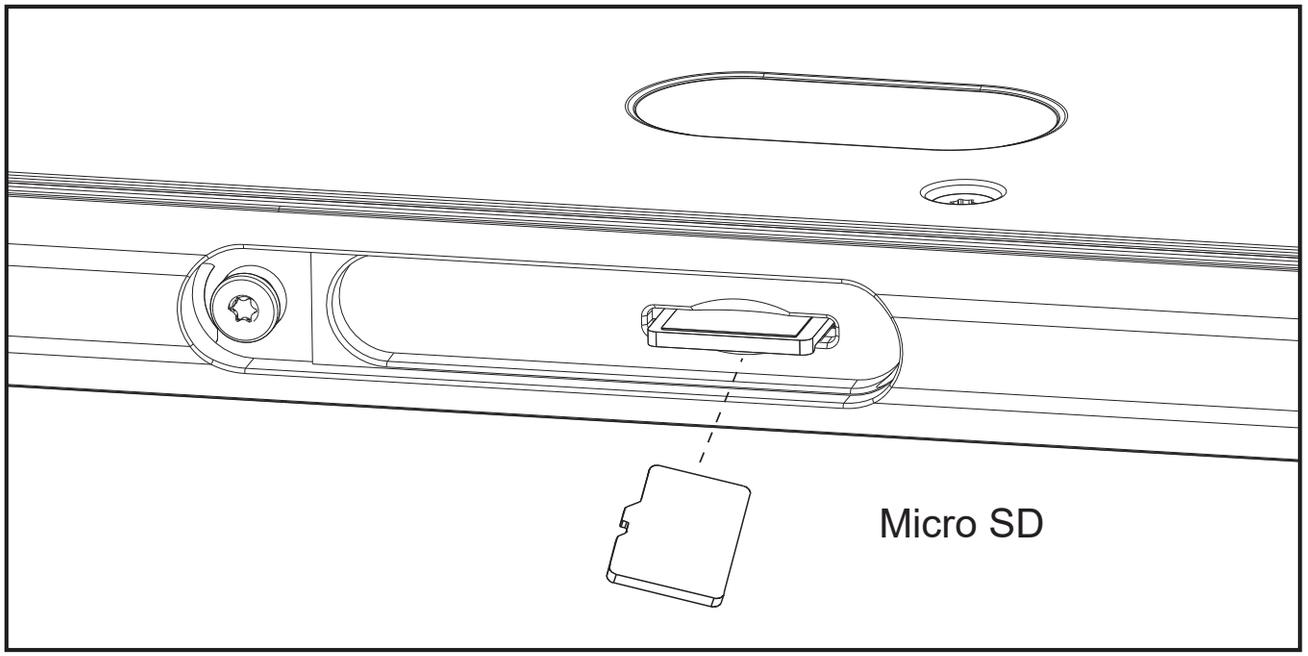

Notice

1. Some special places, such as airports, hospitals, gas stations and other places, do not allow the use of electronic equipment. Please comply with the rules and do not use this product in these places.
2. For your safety and the safety of others, please do not use this product while driving a vehicle.
3. In order to avoid potential safety problems, do not put this product near the vehicle's airbag.
4. For your safety, please do not use this product during thunderstorms.
5. Although this product is waterproof, do not leave this product for long periods of time in areas with water or moisture.
6. This product has an operating temperature range of -10°C~+55°C and a storage temperature range of -40°C~+70°C. Extreme temperatures can affect the device's performance and service life.
7. Please use an original rechargeable lithium battery. Low-quality batteries will affect the performance and service life of the device, and may even have the danger of explosion.
8. Although the product has been tested to withstand harsh operating environments, do use the product in an improper manner.
9. Please do not disassemble this product. In case of failure, please send to our authorized service centres to proceed with repairs.
10. After the device has reached the end of its service life, please discard in a proper way to avoid environmental pollution.
11. When replacing the battery or during the use of an external power supply, shut down the device completely before removing the battery or disconnecting the external power supply to prevent damage.
12. This product is a Class B product, which may cause radio interference. The user may be required to take necessary preventive measures.
13. Only use AC adaptor with 3-pin and 2-pin detachable pin for Singapore.

Battery Instructions

1. This product uses a rechargeable lithium battery as a power source. When the power is low, please charge the battery. To maintain battery life, it is recommended to deplete the battery's power before charging.
2. When the battery charger is not in use, please remove it from the power supply. Do not connect the charger to the battery for more than one week. Excessive charging will shorten the battery life.
3. Temperature affects the battery charging limit. Therefore, the battery may need to be cooled or warmed up before charging.
4. Please use the battery for its original intended purpose to prevent short-circuiting the battery. A short circuit will occur when a conductive material connects the battery’s positive and negative terminals.
5. Do not use a battery that is damaged.
6. Placing the battery in extremely cold or hot places will lead to shortened battery life. Exposing the battery to extreme temperatures may cause the phone to malfunction, even if the battery is fully charged.
7. Do not put the battery in a fire. Please discard the battery in a proper manner or take the battery to a battery recycling station. Please dispose waste batteries in accordance with local laws and regulations.

Importer : Hagiwara Solutions Co.,LTD.
2-5-12 Nishiki, Naka-Ku, Nagoya,Aichi, 460-0003 JAPAN

Manufacturer : Hagiwara Solutions Co.,LTD.
2-5-12 Nishiki, Naka-Ku, Nagoya,Aichi, 460-0003 JAPAN

NOTICE:

The SAR limit of Europe is 2.0 W/kg. Device types LZ-WA10 has also been tested against this SAR limit. The highest SAR value reported under this standard during product certification when properly worn on the body is 0.075W/kg This device was tested for typical body - worn operations with the back of the handset kept 0 cm from the body. To maintain compliance with RF exposure requirements, use accessories that maintain a 0 cm separation distance between the user's body and the back of the handset. The use of belt clips, holsters and similar accessories should not contain metallic components in its assembly. The use of accessories that do not satisfy these requirements may not comply with RF exposure requirements, and should be avoided.

The SAR limit of FCC and ISED is 1.6 W/kg averaged over one gram of tissue. Device types LZ-WA10
(FCC ID:2AVQX-EZWA10) has also been tested against this SAR limit. The
highest SAR value reported under this standard during product certification for use on the body is 0.353 W/kg. This device was tested for typical body -worn operations with the back of the handset
kept 0 cm from the body. To maintain compliance with FCC and ISED RF exposure requirements,
use accessories that maintain a 0 cm separation distance between the user's body and the back of
the handset. The use of belt clips, holsters and similar accessories should not contain metallic components in its assembly. The use of accessories that do not satisfy these requirements may not
comply with FCC and ISED RF exposure requirements, and should be avoided.

element： High sound pressure is associated with a risk of hearing damage

NOTICE:

This device complies with Part 15 of the FCC Rules and with RSS-210 of Industry Canada.
Operation is subject to the following two conditions:
(1) this device may not cause harmful interference, and
(2) this device must accept any interference received, including interference that may cause undesired operation.
Le présent appareil est conforme aux CNR d'Industrie Canada applicables aux appareils radio exempts de licence. L'exploitation est autorisée aux deux conditions suivantes : (1) l'appareil ne doit pas produire de brouillage, et (2) l'utilisateur de l'appareil doit accepter tout brouillage radioélectrique subi, même si le brouillage est susceptible d'en compromettre le fonctionnement.
NOTICE:
Changes or modifications made to this equipment not expressly approved by Hagiwara Solutions Co.,LTD.
Science & Technology Co.,Ltd. may void the FCC authorization to operate this equipment.
NOTE: This equipment has been tested and found to comply with the limits for a Class B digital device, pursuant to Part 15 of the FCC Rules. These limits are designed to provide reasonable protection against harmful interference in a residential installation. This equipment generates, uses and can radiate radio frequency energy and, if not installe d and used in accordance with the instructions, may cause harmful interference to radio communications. However, there is no guarantee that interference will not occur in a particular installation. If this equipment does cause harmful interference to radio or television reception, which can be determined by turning the equipment off and on, the user is encouraged to try to correct the interference by one or more of the following measures:
Reorient or relocate the receiving antenna.
Increase the separation between the equipment and receiver.
Connect the equipment into an outlet on a circuit different from that to which the receiver is connected.
Consult the dealer or an experienced radio/TV technician for help.
NOTICE:
This Class [B] digital apparatus complies with Canadian ICES -003.
Cet appareil numérique de la classe [B] est conforme à la norme NMB - 003 du Canada.
RF mode and power tune-up refer to appendix A

Notice

This device is restricted to indoor use where operated in the European Community using frequency in 5150MHz ~ 5250MHz to reduce the potential for interference. Restriction in BE, BG, CZ, DK,DE,EE,IE,EL,ES,FR,HR,IT,CY,LV,LT, LU,HU,MT,NL,AT,PL,PT,RO,SI,SK,FI,SE,UK.

	BE	BG	CZ	DK	DE	EE	IE	EL	ES	FR
	HR	IT	CY	LV	LT	LU	HU	MT	NL	AT
	PL	PT	RO	SI	SK	FI	SE	UK		

Hereby, [Hagiwara Solutions Co.,LTD.] declares that the radio equipment type [LZ-WA10] is in compliance with Directive 2014 / 53 /EU.

Normal Mode RF Power Range (WLAN, Bluetooth)

Band (GHz)	Mode	Range(dBm)
2.4 (2.4~2.4835)	802.11b	11.00-14.00
	802.11g	11.00-14.00
	802.11n(HT20)	11.00-14.00
	802.11n(HT40)	11.00-14.00

Band (GHz)	Mode	Range(dBm)
5.2 (5.15~5.25)	802.11a	7.00-11.00
	802.11n(HT20)	7.00-11.00
	802.11n(HT40)	7.00-11.00
	802.11ac(VHT20)	7.00-11.00
	802.11ac(VHT40)	7.00-11.00
	802.11ac(VHT80)	7.00-11.00

Band (GHz)	Mode	Range(dBm)
5.8 (5.725~5.825)	802.11a	8.00-12.00
	802.11n(HT20)	8.00-12.00
	802.11n(HT40)	8.00-12.00
	802.11ac(VHT20)	8.00-12.00
	802.11ac(VHT40)	8.00-12.00
	802.11ac(VHT80)	8.00-12.00

Band (GHz)	Mode	Range(dBm)
Bluetooth	GFSK	0.00-5.00
	π/4-DQPSK	0.00-5.00
	8-DPSK	0.00-5.00
	BLE	0.00-2.00

www.hagisol.com