SC-A4 15W 产品说明书

尺寸：270*100mm　　单面印刷

材质：128克铜版纸

Wireless Charger

User Manual

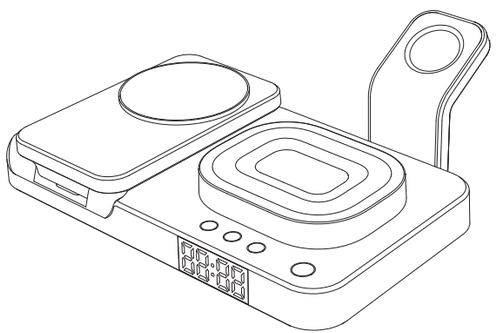

Fast wireless charging requires Qualcomm 18W or PD18W, and 18W above adapter

★ Support wireless charging for iPhone

★ Support wireless charging for Apple Watch and AirPods

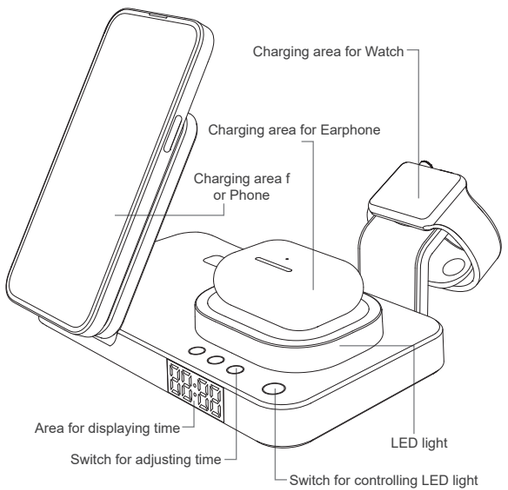

Specifications

Input: DC 5V/3A DC 9V/3A Max

Output: DC 5V 0.4A/5V 1A/9V 1.22A/9V 1.66A

Product Standard：Qi

Rated power: Watch: 2W;

Earphone: 5W; Phone: 5W, 10W, 15W

Charging Distance：≤10mm

Charging Efficiency：≤80%

Product Dimension：180*65.2*106mm

Product Material：ABS+Tempered Glass

Input interface：Type-C port

Indicators and Protection Function

1.Standby mode: Indicator light keeps white and enters the standby mode; The clock shows 0000 When the capacitor is out of power.
2.Charging mode: No indicator.
3.LED light: Press the button to adjust the brightness of the light.The white light will cycle from "weak, medium, strong and off " in turn.
4. FOD function: When put metal or magnet objects on the charger, the white LED indicator light will flash 3 times for reminding.
5.Perfect protective function based on over-voltage, over-current, over-temperature and short-circuit protection.

Attention

1.Please do not vigorously extrude or collide.
2.Please do not dismantle or put it into fire or water when the product is power on,to avoid short circuit or leakage.
3.Please do not use it in severely high temperature,high humidity or corrosive environment, to avoid damage to the circuit leakage.
4.Please do not put the magnetic strip or chip card (Such as ID card,bankcard etc.)on the charging pad to avoid to cause magneticcard lose efficacy.
5.Please do not put the metal (Such as coin etc.) on the chargingpad when charging,to avoid damage from heating.

Note:This product is applicable to all Qi standard wireless charging phones,other phones need an external receiver for wireless charging function.

FCC Warning

This device complies with part 15 of the FCC Rules. Operation is subject to the following two conditions:(1) This device may not cause harmful interference, and (2) this device must accept any interference received, including interference that may cause undesired operation.

Any Changes or modifications not expressly approved by the party responsible for compliance could void the user's authority to operate the equipment.

This equipment has been tested and found to comply with the limits for a Class B digital device, pursuant to part 15 of the FCC Rules. These limits are designed to provide reasonable protection against harmful interference in a residential installation. This equipment generates uses and can radiate radio frequency energy and, if not installed and used in accordance with the instructions, may cause harmful interference to radio communications. However, there is no guarantee that interference will not occur in a particular installation. If this equipment does cause harmful interference to radio or television reception, which can be determined by turning the equipment off and on, the user is encouraged to try to correct the interference by one or more of the following measures:

- Reorient or relocate the receiving antenna.
- Increase the separation between the equipment and receiver.
- Connect the equipment into an outlet on a circuit different from that to which the receiver is connected.
- Consult the dealer or an experienced radio/TV technician for help.

FCC RF exposure statement:

The equipment complies with FCC radiation exposure limits set forth for an uncontrolled environment. This equipment should be installed and operated with minimum distance between 20cm the radiator your body.

Warning: Please do not disassemble the wireless charging part of the watch, which may damage the product.